What's in CTC Union

You are our most valuable asset

ISO 9001

RoHS READY

CARRIER ETHERNET MEF Certified Compliant Member

Let's make the world Green

www.ctcu.com

Table of Contents

Chapter 1

Fiber Series

Table of Contents

Chapter 2 XDSL Series

Chapter 3 PDH Series

Chapter 4 IP Networking

Chapter 5 Tester Series

Chapter 6 Interface converters

Chapter 7 Management

Chapter 8 IP Surveillance

Chapter 1.

Fiber

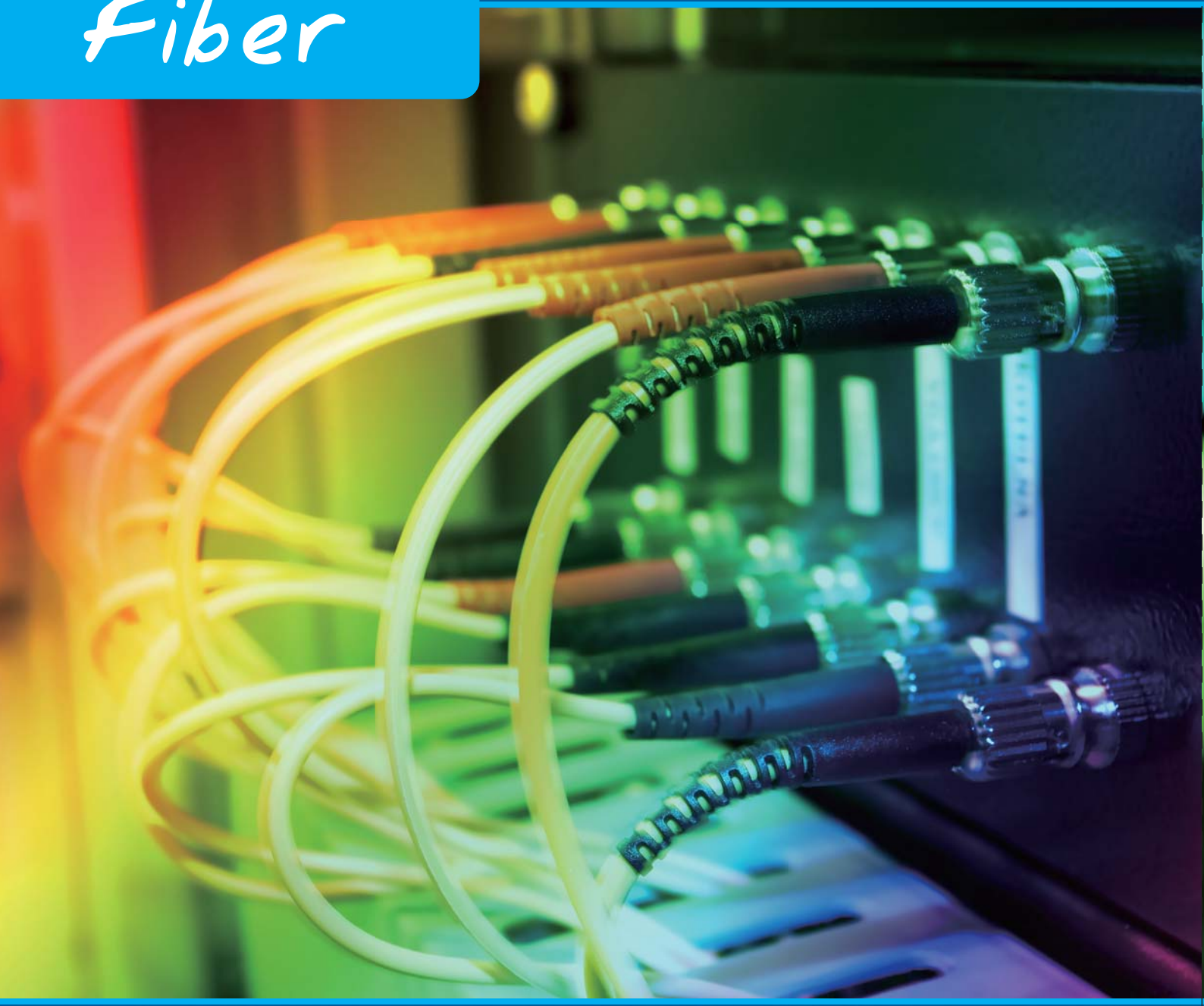

Ethernet over Fiber

Ethernet over SDH

10G Transponder

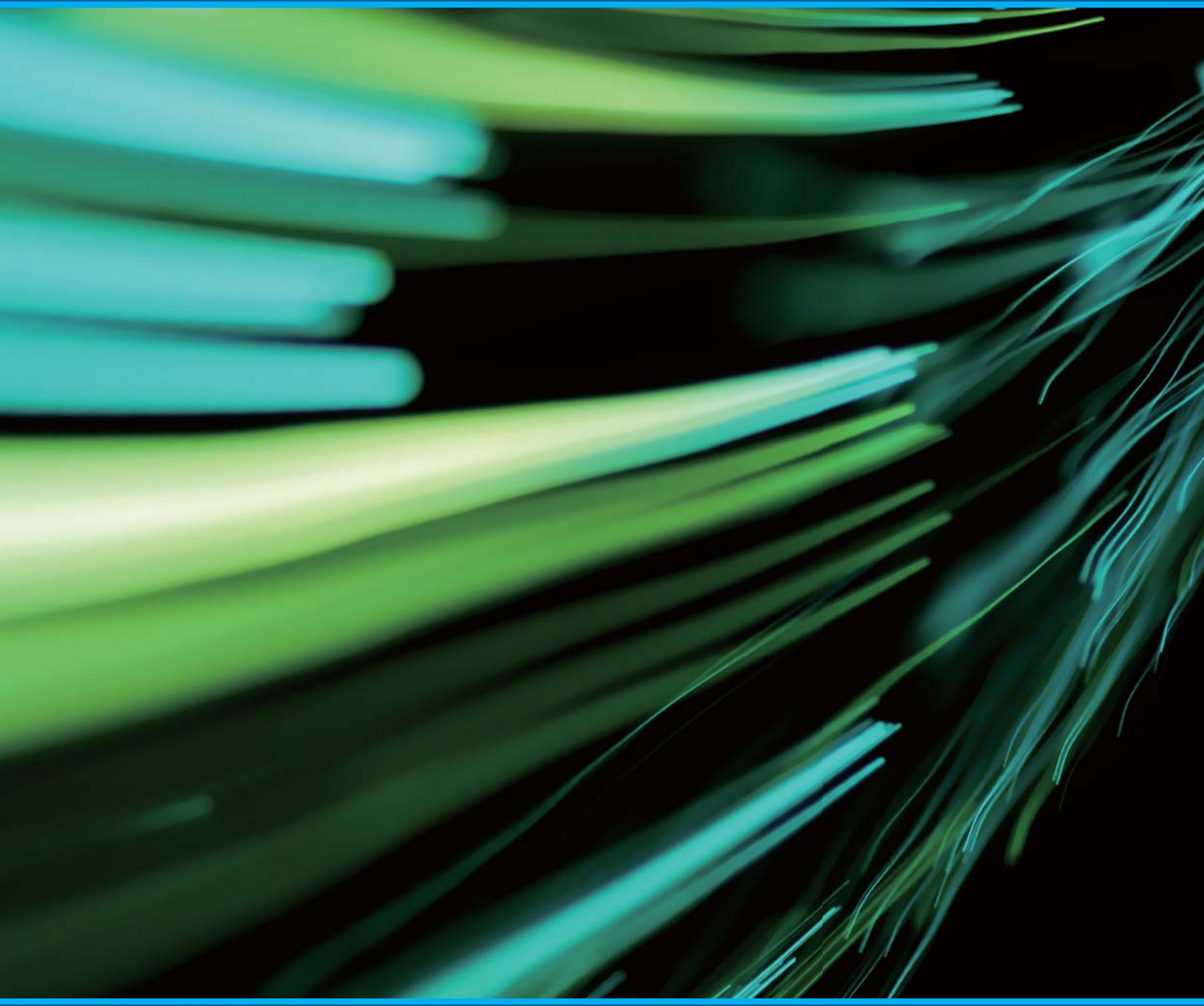

Ethernet Demarcation

Integrated Access Device

CWDM

In-band Managed Multi-service Platform

FRM220

The FRM220 is a 2U high 19" Rack, 20 slot modular media converter rack. It provides an economic solution in high density fiber converter installations in enterprises or central offices. All critical components, Power, fans, management module and interface cards are hot swappable, allowing online field replacement. The hot-swappable power modules can be chosen from AC100-240V, DC18-36. or DC 36-75V. The chassis also has a pair of alarm relays and is able to stack up to 10 chassis as one management IP address. A number of cards are available that support different protocols including Ethernet, Voice, Data, transponders, FOM and IMUX.

Connectors

Console RS232(DB9)
LAN 10/100 Base TX RJ45

Physical Specifications

Dimensions: 303mm x 438mm x 88mm (W x D x H)
Weight: 5.2kg w/o P/S

Power Characteristics

AC : 100 ~ 240VAC
DC24 : 18 ~ 36VDC, DC48: 36 ~ 75VDC

Environmental Specifications

Operating 0°C ~ 50°C
Storage -10°C ~ 70°C
Relative humidity 5% ~ 90% non-condensing
Predicted MTBF : 65,000 hrs

Certification

FCC class A, VCCI class A, CE, RoHS

20 slot Multi-service Platform

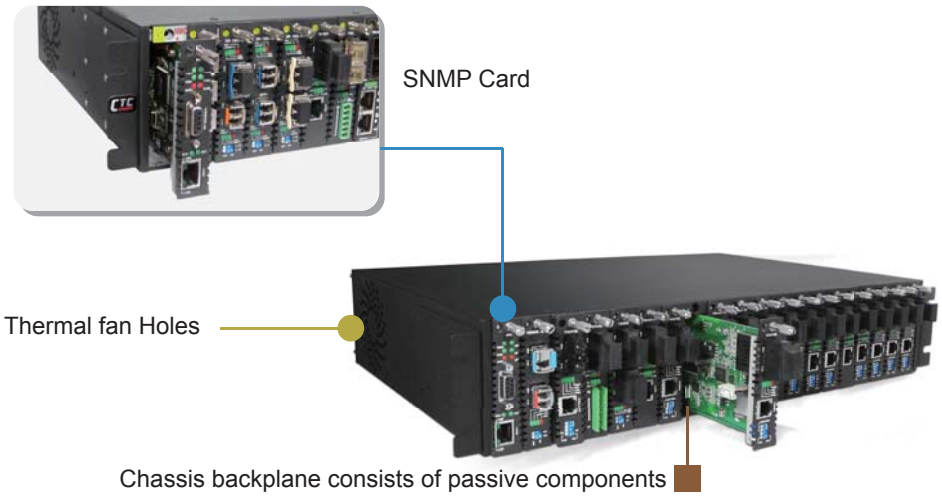

Technologies Supported:

- 10G, 2.7G 3R Transponder
- Gigabit Ethernet Converter
- Fast Ethernet Converter
- Fiber Multiplexer
- POTS Fiber Converter
- Fiber Repeater
- E1/T1 Fiber Modem
- V35/X21/RS530 Fiber Modem
- Serial RS485/422 Fiber Converter

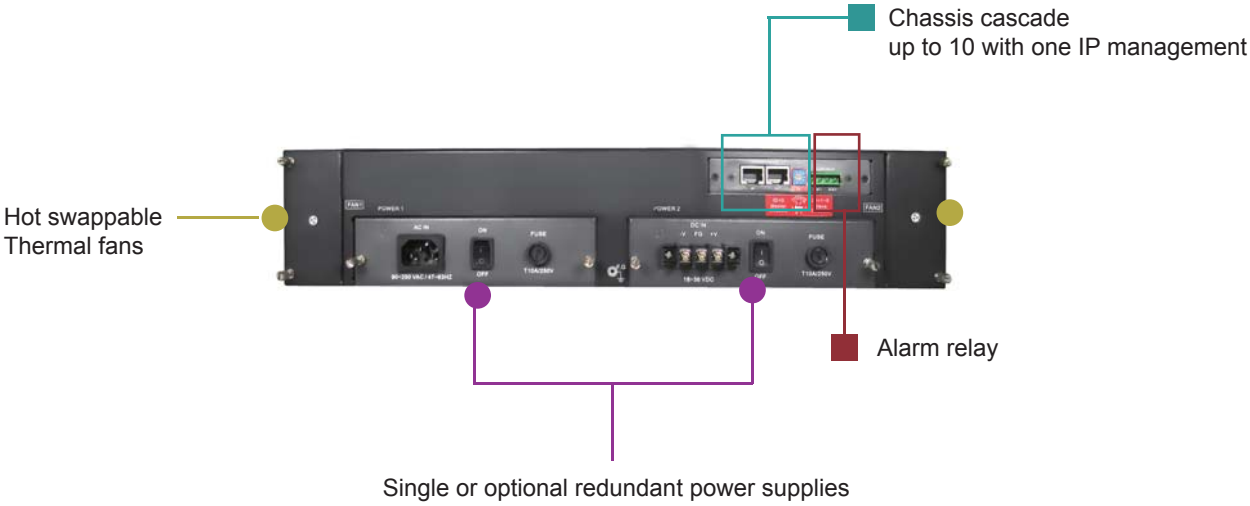

Power Redundancy

All the FRM220 chassis power supplies are hot swappable and modular, installing two into a chassis provides redundancy should a single power supply fail. A fully loaded chassis can run continuously with only one power module fitted into the chassis.

Cooling Fan

To further increase system reliability, the FRM220 chassis is fitted with two hot swappable fan modules. Both fan modules can be easily removed from the rear of the chassis, without interruption to the operation of the line cards. A fully loaded chassis can run continuously with only one fan module fitted into the chassis.

Chassis cascade

The FRM220 features cascadeable management which allows managing a stack (up to 10 chassis) from a single IP address. Chassis are interconnected with standard UTP cables that carry control signals. Each chassis has its own ID, starting with the master chassis ID0 and cascading up to ID9.

Network Management

The FRM220 chassis provides an NMC (Network Management Controller) card which must be installed into the first slot of chassis. The NMC card allows a network administrator with the ability to configure and monitor the status of the blades.

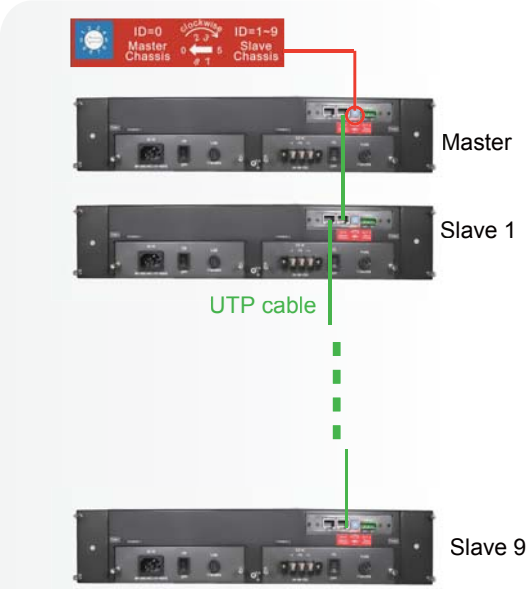

10 chassis cascade with one IP management

Management can be achieved locally over RS232, or over the network by Telnet, Web or SNMP If the blades support Ethernet in the First Mile (IEEE 802.3ah), then the management module can also configure and monitor the status of a remote blade.

Protocol Supported

The FRM220 chassis has been designed as a Multi-serivce platform. This allows network administrators to deploy the chassis in a wide range of network. Technologies supported by the chassis included Fast/Gigabit Ethernet, E1/T1, V35/X21/RS530, Serial RS485/422, Voice FXO/FXS, Repeater, Fiber Multiplexer, E1 Inverse Multiplexer and 10G, 2.7G Transponder.

Ordering Information

FRM220- □□□□□ Model type

CH20 : 2U 19" 20 slot chassis
AC : 100 ~ 240 AC power card
DC24 : 18 ~ 36 DC power card
DC48 : 36 ~ 72 DC power card

Example: FRM220-CH20

FRM220- □□□□□ Optional card

NMC
1000E-2F : 1000X to 1000X
1000E-1 : 10/100/1000T to 1000X
1000T : 1000T to 1000X
10/100A : 10/100TX to 100FX with OAM/IP In-band management
10/100i : 10/100TX to 100FX with In-band management
FXO/FXS : POTS over fiber converter
E1/T1R : E1/T1 RJ40 fiber modem
E1B : E1 BNC fiber modem
V35 : V35 fiber modem
X.21 : X.21 fiber modem
RS530 : RS530 fiber modem
RS449 : RS449 fiber modem
RS232 : RS232 fiber modem
Serial : RS485/422/232 fiber converter
10G : 10G 3R Transponder
2.7G : 2.7G 3R Transponder

Example: FRM220-1000E-2F

In-band Managed Multi-service Platform with Ethernet Switch Trunk card

FRM220A

The FRM220A is a 2U high 19" Rack, 20 slot modular media converter rack, designed with one Gigabit Ethernet switch uplink, for efficient scalability and easy deployment in access networks. It provides an economic solution in high density fiber converter installations in enterprises or central offices. All critical components, Power, fans, management module and interface cards are hot swappable, allowing online field replacement. The hot-swappable power modules can be chosen from AC100-240V, DC18-36. or DC 36-72V. The chassis also has a pair of alarm relays and is able to stack up to 10 chassis as one management unit.

Features

- 2U 19" 20-slot Chassis with AC/DC power redundancy
- Chassis cascade up to 10 with one IP management
- Chassis backplane consists of passive components
- Chassis supports uplink Gigabit Ethernet switch 4-port 10/100/1000T plus 4-port 1000SX/LX SFP trunk card
- All modules and cards support hot-swap function
- Two alarm relays
- E1 Inverse Multiplexers are supported by Gigabit
- Ethernet switch trunk card

Connectors

Console RS232(DB9)

LAN 10/100 Base TX RJ45

Physical Specifications

Dimensions: 303mm x 438mm x 88mm (W x D x H)

Weight: 5.2kg w/o P/S

Power Characteristics

AC : 100 ~ 240VAC

DC24 : 18 ~ 36VDC, DC48: 36 ~ 75VDC

Environmental Specifications

Operating 0°C ~ 50°C

Storage -10°C ~ 70°C

Relative humidity 5% ~ 90% non-condensing

Predicted MTBF : 65,000 hrs

Certification

FCC class A, VCCI class A, CE, RoHS

20 slot Multi-service Platform

Technologies Supported:

- E1 Inverse Multiplexer
- 10G, 2.7G 3R Transponder
- Gigabit Ethernet Converter
- Fast Ethernet Converter
- Fiber Multiplexer
- POTS Fiber Converter
- Fiber Repeater
- E1/T1 Fiber Modem
- V35/X21/RS530 Fiber Modem
- Serial RS485/422 Fiber Converter

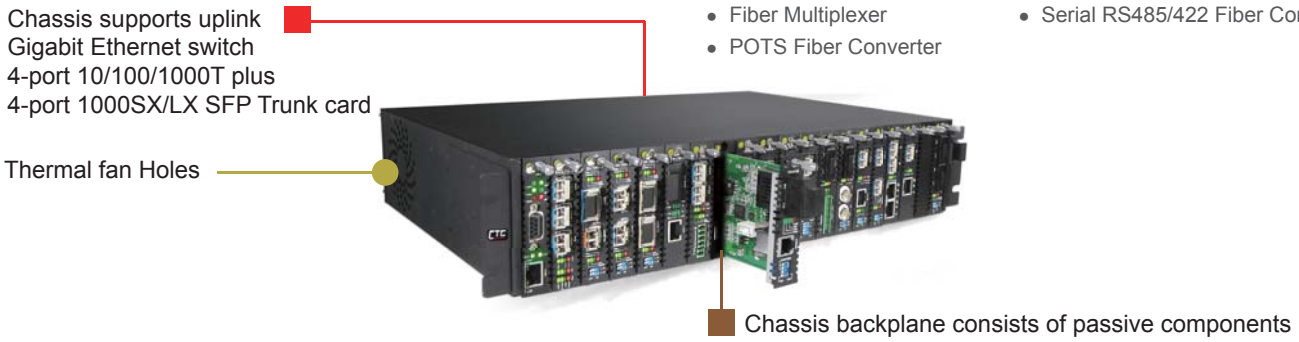

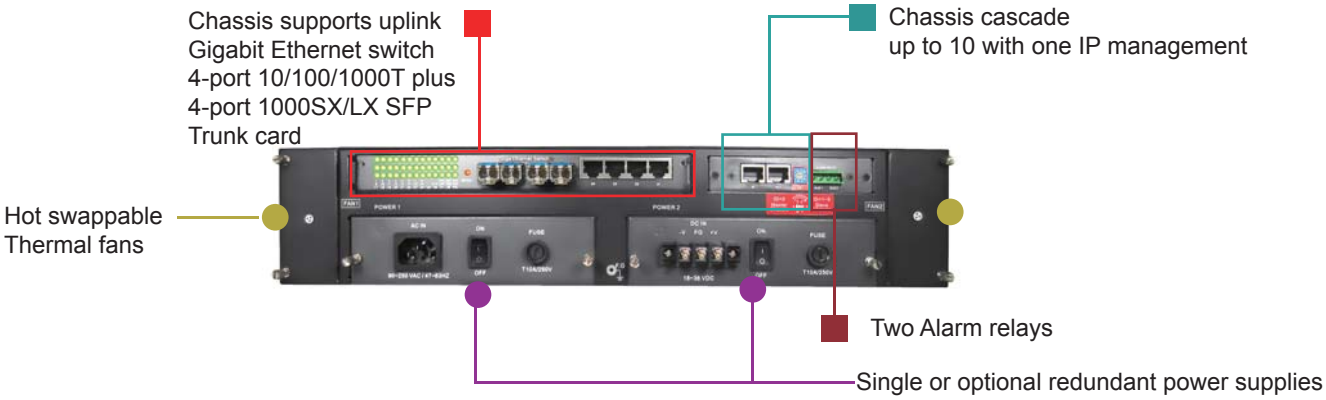

Power Redundancy

All the FRM220A chassis power supplies are hot swappable and modular, installing two into a chassis provides redundancy should a single power supply fail. A fully loaded chassis can run continuously with only one power module fitted into the chassis.

Cooling Fan

To further increase system reliability, the FRM220A chassis is fitted with two hot swappable fan modules. Both fan modules can be easily removed from the rear of the chassis, without interruption to the operation of the line cards. A fully loaded chassis can run continuously with only one fan module fitted into the chassis.

Chassis cascade

The FRM220A features cascadeable management which allows managing a stack (up to 10 chassis) from a single IP address. Chassis are interconnected with standard UTP cables that carry control signals. Each chassis has its own ID, starting with the master chassis ID0 and cascading up to ID9.

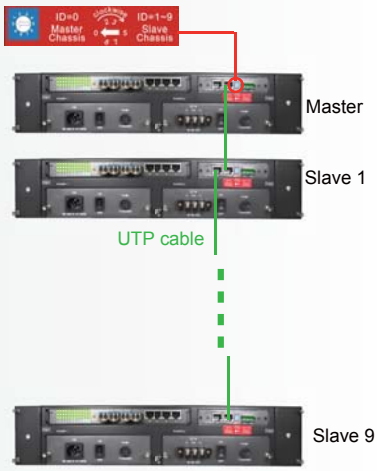

10 chassis cascade with one IP management

Gigabit Ethernet switch with Network Management

The FRM220A incorporates a 24+4 Gigabit Ethernet Switch. Twenty ports supply each slot of the 2U 20-slot chassis with an electrical gigabit Ethernet uplink with the remaining four electrical gigabit ports accessible via the rear of the chassis. The additional four ports are provided by SFP sockets.

All eight gigabit ports (4+4) are usable without restrictions for uplink aggregate to the Ethernet Metropolitan Area Network (E-MAN). The FRM220A-GSW/SNMP card transmits Ethernet between the subscriber equipment (bridge/modem or network interface card) and the E-MAN. The card provides a user-networking interface with Ethernet packets. This card is capable of providing high bandwidth for assembling Ethernet traffic. The FRM220A-GSW/SNMP card is not only the system aggragate/trunk module, but also the system's control module, providing OAM / IP Management functions.

Protocol Supported

The FRM220A chassis has been designed as a Multi-serivce platform. This allows network administrators to deploy the chassis in a wide range of network. Technologies supported by the chassis included Fast/Gigabit Ethernet, E1/T1, V35/X21/RS530, Serial RS485/422, Voice FXO/FXS, Repeater, Fiber Multiplexer and E1 Inverse Multiplexer (Supported by Gigabit Ethernet trunk card).

Ordering Information

FRM220A-□□□□□□ Model type

CH20 : 2U 19" 20 slot chassis
AC : 100 ~ 240 AC power card
DC24 : 18 ~ 36 DC power card
DC48 : 36 ~ 72 DC power card

Example: FRM220A-CH20

FRM220A-□□□□□□ Optional card

GSW/SNMP
E1/ET100 :E1/ET100 Inverse Mux
5E1/ET100 :5E1/ET100 Inverse Mux
8E1/ET100 :8E1/ET100 Inverse Mux
16E1/ET100 :16E1/ET100 Inverse Mux

Example: FRM220A-E1/ET100

E1/V35 :E1 to V35
E1/X.21 :E1 to X.21
E1/RS530 :E1 to RS530

Example: FRM220A-E1/V35

FRM220-□□□□□□ Optional card

1000E-2F : 1000X to 1000X
1000E-1 : 10/100/1000T to 1000X
1000T : 1000T to 1000X
10/100A : 10/100TX to 100FX with OAM/IP In-band management
10/100i : 10/100TX to 100FX with In-band management
FXO/FXS : POTS over fiber converter
E1/T1R : E1/T1 RJ40 fiber modem
E1B : E1 BNC fiber modem
V35 : V35 fiber modem
X.21 : X.21 fiber modem
RS530 : RS530 fiber modem
RS449 : RS449 fiber modem
RS232 : RS232 fiber modem
Serial : RS485/422/232 fiber converter
10G : 10G 3R Transponder
2.7G : 2.7G 3R Transponder

Example: FRM220-1000E-2F

FRM220 Slide-in Card Chassis

Overview

The FRM220 Chassis Product line includes various metal chassis sizes, which can hold from one to twenty FRM220 slide-in modules. The FRM220-CH01 is one slot chassis, which can be installed with one single width blade card for stand-alone applications. The available power options are external AC adapter, built-in AC, DC power or built-in AC+DC, AC+AC, DC+DC dual power. The FRM220-CH01M is one slot chassis with DB9 console port for local management, which can be installed with one single width blade card for stand-alone applications. The available power options are built-in AC, DC or built-in AC+DC dual power.The FRM220-CH02 is a two slot chassis, which can be installed with either one or two single width blades or one double width blade card for stand-alone applications. The only available power supply option is an external AC adapter.

The FRM220-CH02M is a two slot chassis with DB9 console port for local management, which can be installed with either one or two single width blade cards or one double width blade card. The available power supplies are built-in AC, DC or AC+DC dual power.The FRM220-CH02/NMC is a two slot chassis and the FRM220-CH04/NMC is a four slot chassis. Both chassis can be SNMP managed when installing one FRM220-NMC card for Web, Telnet, Console and SNMP management. The FRM220-CH02/NMC and FRM220-CH04/NMC can be installed with either one or two single width blade cards or one double width blade card. The FRM220-CH02/NMC available power options are built-in AC, DC or AC+DC dual power. The FRM220-CH04/NMC is only available with external AC adapter.

FRM220 One Slot Chassis
FRM220- CH01

Features

- One slot chassis for FRM220 line cards.
- Available in six types: external power adapter or power built-in AC, DC, AC+DC, AC+AC or DC+DC.
- Fanless
- Dimensions
  external adapter: 160 x 88 x 24mm (D x W x H)
  internal power: 180 x 135 x 35mm (D x W x H)

Power Input

External adapter
Input voltage 100 ~ 240VAC 50/60Hz
Output voltage 12VDC 1A

AC power 100 ~ 240VAC
DC power 24VDC, 48VDC, 72VDC

Ordering Information

Line card — Power type

FRM220- □□□□□ **-CH01-** □□□□□

DC12 : AC adapter
AC : AC power
DC :DC power
AD : AC+DC power
AA : AC+AC power
DD :DC+DC power

Example: FRM220-10/100i-CH01-AC

FRM220 One Slot Chassis with Console port
FRM220-CH01M

Features

- One slot chassis for FRM220 line cards
- Supports DB9 console port for Local management
- Available in three types: power built-in AC, DC, AC+DC.
- Fanless
- Dimensions : 201 x 135 x 35mm (D x W x H)

Power Input

AC power 100 ~ 240VAC
DC power 24VDC, 48VDC, 72VDC

Ordering Information

Line card — Power type

FRM220- □□□□□ **-CH01M-** □□□□□

AC : AC power
DC :DC power
AD : AC+DC power

Example: FRM220-10/100i -CH01M-AC

Line card supported by CH01M :10/100i, 10/100iS, E1/T1, Data

FRM220 Two Slot Chassis
FRM220-CH02

Features
- Two slot chassis for FRM220 line cards
- Supports either one or two single width blades or one double width blade.
- Power type: external power adapter
- Fanless
- Dimensions : 139 x 88 x 44mm (D x W x H)

Power Input
Power adapter

Input voltage 100 ~ 240VAC 50/60Hz

Output voltage 12VDC 1A

Ordering Information

FRM220-CH02- □□□□□ Power type

DC12-1 : chassis for one AC adapter

Example: FRM220-CH02-DC12-1

FRM220 Two Slot Chassis with Console port
FRM220-CH02M

Features
- Two slot chassis for FRM220 line cards
- Supports backplane connection between two slots
- Supports DB9 console port for local management
- Supports either one or two single width blades or one double width blade. Available in three types: built-in AC, DC, AC+DC.
- Cooling Fan
- Dimensions : 220 x 168 x 45mm (D x W x H)

FRM220 SNMP manageable Two Slot Chassis
FRM220-CH02/NMC

Features
- Two slot chassis for FRM220 line cards
- Supports backplane connection between two slots
- Telnet, Web, Console, SNMP manageable via NMC card
- Supports either one or two single width blades or one double width blade. Available in three types: built-in AC, DC, AC+DC.
- Cooling Fan
- Dimension : 220 x 168 x 45mm (D x W x H)

Power Input

AC power	100 ~ 240VAC
DC power	24VDC, 48VDC, 72VDC

Ordering Information

FRM220-CH02M- □□□□□□

FRM220-CH02/NMC- □□□□□□ Power type

AC : AC power

DC :DC power

AD : AC+DC power

Example: FRM220-CH02M-AC

FRM220-CH02/NMC-AC

FRM220 SNMP manageable Four Slot Chassis
FRM220-CH04/NMC

Features
- Four slot chassis for FRM220 line cards
- Supports backplane connection between four slots
- Telnet, Web, Console, SNMP manageable via NMC card
- Supports one to four single width blades or two double width blades.
- Available with external power only
- Fanless
- Dimension : 162 x 87 x 88mm (D x W x H)

Power Input
Power adapter

Input voltage 100 ~ 240VAC 50/60Hz

Output voltage 12VDC 2A

Ordering Information
FRM220-CH04/NMC-DC12: 4 Slot Chassis with external adapter

Network Management Controller

FRM220-NMC

The FRM220-NMC is a Network Management Controller card that can be placed in a compatible FRM220 series chassis to provide network management functions. The management interface supports a local RS-232 serial console or remote TCP/IP management by Telnet, HTTP or SNMP protocols. The card is designed to be hot swapped so that it may be field replaced without affecting any online service of any other rack cards. The card also supports online firmware upgrade from TFTP server, using any user interface.Support for any standard NMS is provided by the included proprietary MIB file.

CTC Union also provides and maintains their own EMS (Element Management System) which is a Java based client/server manager for monitoring and maintaining a large number of network elements over a long period of time.

Features

- Supports local / remote monitor and configuration.
  Supports local / remote online TFTP f/w upgrade
- Fiber transceiver status & info display
- Supports multiple accesses for SNMP management
- Supports Web GUI management, Telnet, Serial console
  Supports console RS-232 port and 10/100Base-T Ethernet port
- Supports SNMP standard MIB II and proprietary MIB
  Supports NTP time synchronization
- Supports 100 entries system log

Electrical Interface	• Console RS232 port • LAN 10/100Base-TX
Management Interface	• In-band management: provide all system OAM/IP functions: software updates, and management system interaction through Ethernet port. • Out-band management: supports Web, Telnet and SNMP , EMS management
OAM/IP	• Configuration Management • Performance Management • Fault Management • Status Monitoring.
Indications	• PWR, Fan, Alarm Act, STK, LAN LNK/SPD
Dimensions	• 155 x 88 x 23mm (DxWxH)
Weight	• 120g
Temperature	• 0 ~ 50oC (Operating) , -10 ~ 60oC (Storage)
Humidity	• 10 ~90% non-condensing
Certification	• CE, FCC, LVD, RoHS
MTBF	• 65,000 hrs (25oC)

Serial Console Management

```
                    ****************************************
                    *** CTC UNION TECHNOLOGIES CO., LTD. ***
                    *** FRM220 NMC              VER. 1.95 ***
                    ****************************************
This Chassis ID:[00]  Cascaded:[Yes]    Monitored Chassis ID:[00]
Chassis List:[Master]
    #0:[X] #1:[ ] #2:[ ] #3:[ ] #4:[ ] #5:[ ] #6:[ ] #7:[ ] #8:[ ] #9:[ ]
<1>:SLOT #01 > NMC & Chassis          <B>:SLOT #11 > FRM220-SERIAL
<2>:SLOT #02 > FRM220-10/100I         <C>:SLOT #12 > FRM220-1000EDS
<3>:SLOT #03 > FRM220-10/100I         <D>:SLOT #13 > FRM220-1000EAS
<4>:SLOT #04 > FRM220-10/100I         <E>:SLOT #14 > FRM220-155MS
<5>:SLOT #05 > FRM220-10/100I         <F>:SLOT #15 > FRM220-155MS
<6>:SLOT #06 > FRM220-10/100I         <G>:SLOT #16 > FRM220-1000EAS
<7>:SLOT #07 > FRM220-10/100I         <H>:SLOT #17 > FRM220-E1/T1
<8>:SLOT #08 > FRM220-10/100I         <I>:SLOT #18 > FRM220-1000EAS-1
<9>:SLOT #09 > FRM220-10/100A         <J>:SLOT #19 > FRM220-FXO/FXS
<A>:SLOT #10 > FRM220-DATAPORT        <K>:SLOT #20 > FRM220-FXO/FXS
<->:Monitor Previous Chassis          <+>:Monitor Next Chassis
<L>:SNMP System Configuration Setup
<M>:SNMP Manager Configuration Setup
<P>:Password Setup
<R>:Reboot            <Z>:Logout
Please select an item
```

Web GUI Manager

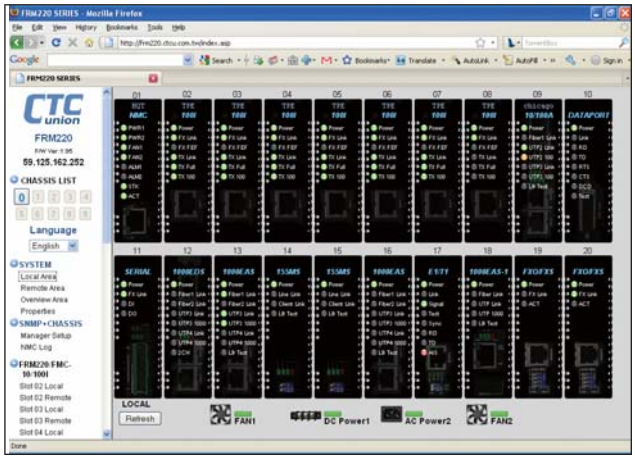

Gigabit Ethernet Aggregate Switch

FRM220A-GSW/SNMP

The FRM220A incorporates a 24+4 Gigabit Ethernet Switch. Twenty ports supply each slot of the 2U 20-slot chassis with an electrical gigabit Ethernet uplink with the remaining four electrical gigabit ports accessible via the rear of the chassis. The additional four ports are provided by SFP sockets. All eight gigabit ports (4+4) are usable without restrictions for uplink aggregate to the Ethernet Metropolitan Area Network (E-MAN). The FRM220A-GSW/SNMP card transmits Ethernet between the subscriber equipment (bridge/modem or network interface card) and the E-MAN. The card provides a user-networking interface with Ethernet packets. This card is capable of providing high bandwidth for assembling Ethernet traffic. The FRM220A-GSW/SNMP card is not only the system aggregate/trunk module, but also the system's control module, providing OAM Management functions.

Features

- Provides chassis aggregation via 4 electrical (RJ-45) 10/100/1000T ports plus 4 optical (SFP) 1000X/2500Base-X Gigabit Ethernet ports
- Optical Ethernet ports Support stacking up to 10 chassis in Ring or Chain topology
- Each chassis slot has one gigabit Ethernet uplink
- Provides Web, Telnet, SNMP for out-band management
- Supports IEEE802.1d Ethernet bridge function between trunk Ethernet ports
- Supports Rapid Spanning Tree Protocol (RSTP) for the trunk interfaces per IEEE 802.1w
- Support automatic source MAC learning and block duplicate ones
- Supports IEEE 802.1q Port-base VLAN and Tag-base VLAN
- Supports static VLAN management
- Supports Link Aggregation in IEEE 802.3ad that allows GbE links to be aggregated together as logical link.
- Support Simple Network Time Protocol (SNTP)
- Supports VLAN level QoS function and 4 priority queues for QoS
- Supports TFTP on-line f/w upgrade

Trunk Interface	• 4x 10/100/1000Base-T plus 4x 1000Base-X/ 2500Base-X GbE Switch trunk card. • Auto-adaptive between full-duplex and half-duplex • Operation modes for 10, 100 , 1000 Mbps operation speed on RJ45 trunk port basis. • The system only supports full-duplex mode for 1000 Mbps. • Supports both RJ45 and optical SFP (Mini-GBIC) connectors
Capacity	Supports up to 20 service cards
Management Interface	• In-band management: provide all system OAM functions: software updates, and management system interaction through Ethernet trunk port. • Out-band management: supports Web, Telnet and SNMP management
Indications	PWR, FAN, Alarm, STK
Dimensions	142x200x26mm (DxWxH)
Weight	500g
Temperature	0 ~ 50°C (Operating), -10 ~ 70°C (Storage)
Humidity	5 ~90% non-condensing
Certification	CE, FCC, LVD, RoHS
MTBF	65,000 hrs (25°C)

Web GUI Manager

Element Manager System

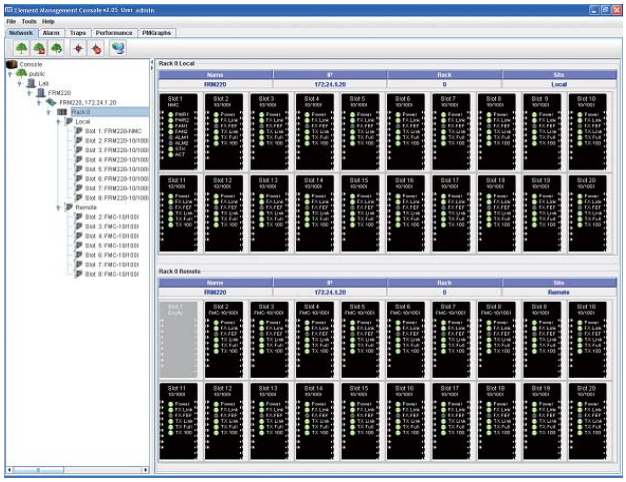

10G 3R Transponder

FRM220-10G

The FRM220-10G is a series of managed 10G fiber to fiber 3R repeater and transponders. Based on a number of 10 Gigabit Fiber standards, these transponders support XFP to XFP (XX), SFP+ to XFP (SX), or SFP+ to SFP+ (SS) fiber connections. The transponders are protocol transparent, providing 3R (Re-amplification, Re-shaping and Re-clocking) regeneration between these different optical module types. One of the major applications for this converter is in connecting proprietary transceiver equipment to CWDM or DWDM when these 'colored' optical modules are not available for the proprietary equipment. With full duplex wire speed forwarding capability between the 2 fiber media, the FRM220-10G brings you the best and simplest solution for your 10G conversion between fiber and fiber.

Features

- Multiple protocol supported 10G Ethernet, 10G FC, STM-64, OC-192
- Network management via Web, Telnet, SNMP in central FRM220-CH20 chassis
- Protocol transparent 3R fiber media transponder / repeater (Re-amplification, Re-shaping and Re-clocking)
- Promotes flexibility and eases management with pluggable SFP+ or XFP transceiver
- Features two 10G ports offering multiservice 10G transponder and regenerator function
- Provides superior optics capabilities resulting in extended transport distances for regional application.
- Extend 10G Ethernet transmission over fiber
- Useful as a 'Transponder' in CWDM or DWDM systems for 10G Ethernet/Fiber Channel/STM-64
- Supports Client / Line loop back tests
- Serial console for stand-alone management When inserted in CH02M Single Slot Chassis

Optical Interface	Connector	FRM220-10G-SS LC, 1x Line SFP to 1x Client SFP+ FRM220-10G-XX LC, 1x Line XFP to 1x Client XFP FRM220-10GSX LC, 1x Line SFP+ to 1x Client XFP
	Traffic Format	OC-192/STM-64 10 Gigabit Ethernet LAN 10G FC (10.51875G) OTN G.709; OTU2 (10.709225G)
	Regeneration	Re-amplification Re-shaping Re-timing
	Loopback	Line / Client
	Fiber	SM 9/125um
	Wavelength	CWDM 1470 ~ 1610nm DWDM 1529.55 ~ 1565.50nm
Indications		LED (Power, Line Link, Client Link, Test, Loop back, Port Active, Alarm)
Power Input		Card : 12VDC , Standalone : AC,DC option
Power Consumption		<10W
Dimensions		155 x 88 x 23mm (D x W x H)
Weight		150g
Temperature		0 ~ 50°C (Operating), -10 ~ 70°C (Storage)
Humidity		10 ~90% non-condensing
Certification		CE, FCC, LVD, RoHS
MTBF		65,000 hrs (25°C)

Managed 10G 3R Transponder

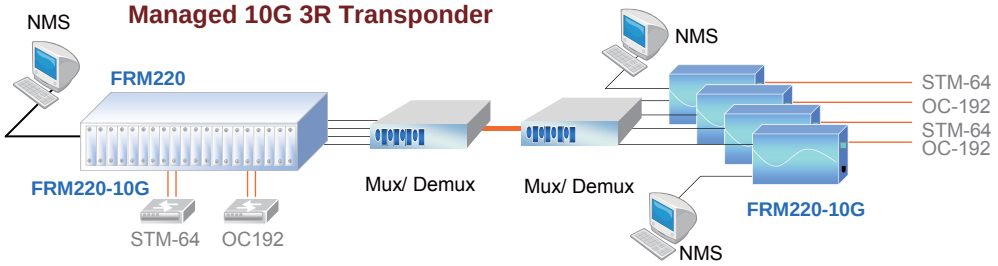

10G 3R Repeater

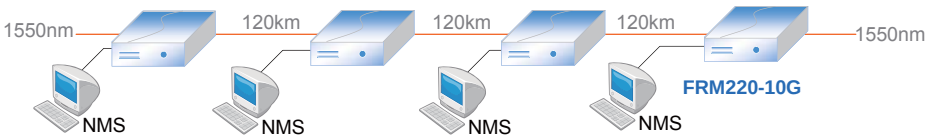

FRM220-10G can be inserted in CH02M, CH02N and CH20 chassis.

Ordering Information

FRM220-□□□□□ Optional card

10G-SS
10G-SX

Example: FRM220-10G-SS

2.7G 3R Transponder

FRM220-2.7G-2S

The FRM220-2.7G-2S is a 2.7G 3R optical regeneration device, which consists of Re-amplification, Re-shaping and Re-timing. The transponder card converts a data signal to the correct wavelength for transmission on a specific channel by supporting SFP optics on both line side and client side interfaces. When the FRM220-2.7G-2S card is placed in the FRM220 rack with SNMP management, the management can view the converter card's status, type, version, fiber link status and alarms. The card can be configured to enable or disable the port, reset the port and set the desired data rate.

Features

- Multiple protocol supported at bit rates 28Mbps to 2.7Gbps (Fast Ethernet, Gigabit Ethernet, OC-3, OC-6, OC-12, OC-24, OC-48, STM-1, STM-4 STM-16, FC-1, FC-2)
- Network management via Web, Telnet, SNMP in central FRM220-CH20 chassis
- Local configuration via DB9 craft port In Stand-alone
- Digital Diagnostic monitoring of SFP module
- Perform optical repeater function (Re-amplification, Re-shaping, and Re-clocking)
- Facility loopback on both Client / Line sides
- Link Fault Pass through (LFP)
- Auto Laser Shutdown (ALS)
- Dip Switch setting data rate
- Detect fiber transmitter error Alarm

Optical Interface	Connector	SFP LC
	Data rate	28M to 2.7Gbps
	Duplex mode	Full duplex
	Fiber	MM 50/125μm, 62.5/125μm. SM 9/125μm
	Distance	MM 2km, SM 15/30/50/80/120km, WDM 20/40/60/80km
	Wavelength	MM 1310nm, SM 1310,1550nm WDM 1310Tx/1550Rx (type A) 1550Tx/1310Rx (type B) CWDM 1470 ~ 1610nm
Indications		LED (PWR, Line Link, Client Link, Test, Loop back, Port Active, Alarm)
Power Input		Card : 12VDC Standalone : AC, DC options
Power Consumption		< 5W
Dimension		155 x 88 x 23mm (D x W x H)
Weight		120g
Temperature		0 ~ 50°C (Operating), -10 ~ 70°C (Storage)
Humidity		10 ~ 90% non-condensing
Certification		CE, FCC, LVD, RoHS
MTBF		65,000 hrs (25°C)

Managed 2.7G 3R Transponder

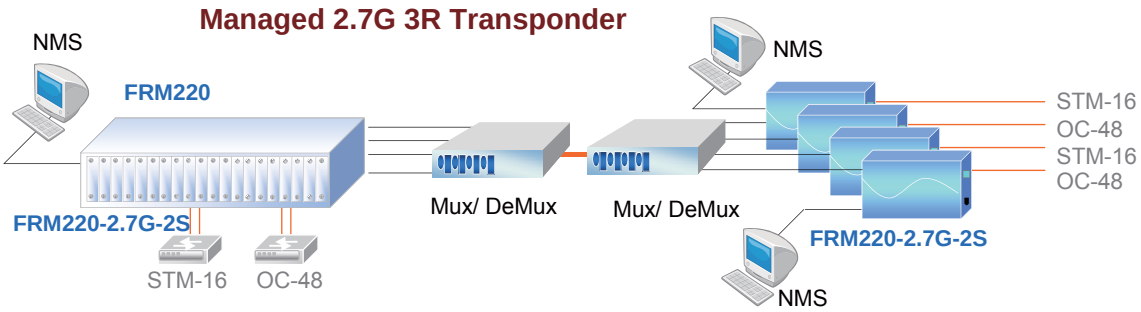

2.7G 3R Repeater

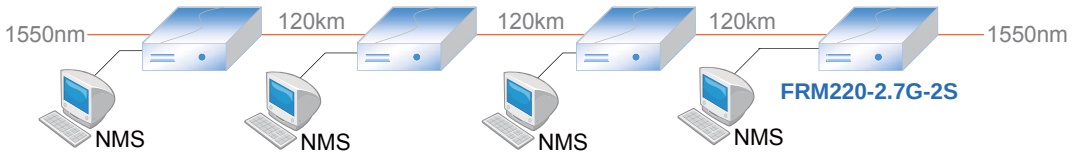

FRM220-2.7G-2S can be inserted in CH02M, CH02N and CH20 chassis.

Ordering Information

FRM220-□□□□□ Optional card

2.7G-2S

Example: FRM220-2.7G-2S

2.7G 3R Transponder with Fiber Protection

FRM220-2.7G-3S

The FRM220-2.7G-3S is a 3R 2.7G optical regeneration device, which consists of Re-amplification, Re-shaping and Re-timing. The transponder card converts a data signal to the correct wavelength for transmission on a specific channel by supporting SFP optics on both line side and client side interfaces. 1+1 Automatic optical line Protection Switching are supported for the aggregate fiber ports. When the FRM220-2.7G-3S card is placed in the FRM220 rack with SNMP management, the management can view the converter card's status, type, version, fiber link status and alarms. The card can be configured to enable or disable the port, reset the port and set the desired data rate.

Features

- Multiple protocol supported at bit rates 28Mbps to 2.7Gbps (Fast Ethernet, Gigabit Ethernet, OC-3, OC-6, OC-12, OC-24, OC-48, STM-1, STM-4 STM-16, FC-1, FC-2)
- Network management via Web, Telnet, SNMP in central FRM220-CH20 chassis
- Local configuration via DB9 craft port In Stand-alone
- Digital Diagnostic monitoring of SFP module
- Perform optical repeater function (Re-amplification, Re-shaping, and Re-clocking) Facility loopback on both Client / Line sides
- 1+1 Optic fiber protection
- Link Fault Pass through (LFP)
- Auto Laser Shutdown (ALS)
- Dip Switch setting data rate
- Detect fiber transmitter error Alarm

Optical Interface	Connector	SFP LC
	Data rate	28M to 2.7Gbps
	Regeneration	Re-amplification Re-shaping Re-clocking
	Loop back	Line/Client
	Fiber	MM 62.2/125μm, 50/125μm. SM 9/125μm
	Wavelength	MM 850, 1310nm SM 1310, 1550nm WDM 1310T/1550R, 1550T/1310R CWDM 1470 ~ 1610nm
Indications		LED (PWR, Line Link, Client Link, Test, Loop back, Port Active, Alarm)
Power Input		Card : 12VDC , Standalone : AC,DC option
Power Consumption		< 10W
Dimensions		155 x 88 x 23mm (D x W x H)
Weight		120g
Temperature		0 ~ 50°C (Operating), -10 ~ 70°C (Storage)
Humidity		10~90% non-condensing
Certification		CE, FCC, LVD, RoHS
MTBF		65,000 hrs (25°C)

Managed 2.7G 3R Transponder with Fiber Protection

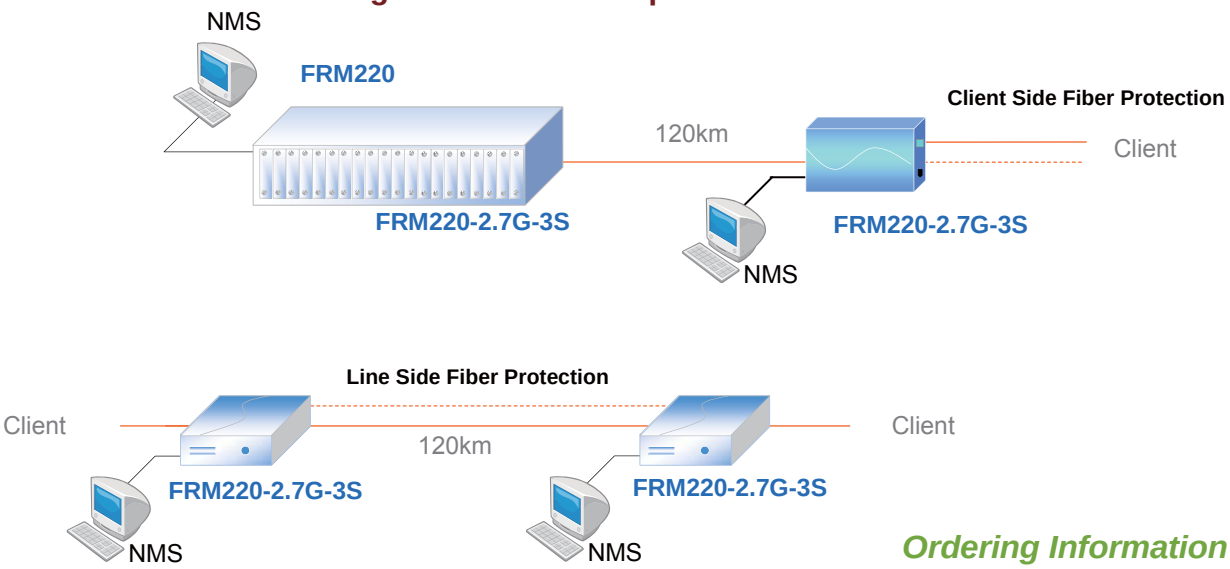

FRM220-2.7G-3S can be inserted CH02M, CH02N and CH20 chassis.

Ordering Information

FRM220-□□□□□ Optional card
2.7G-3S

Example: FRM220-2.7G-3S

155Mbps Transponder

FRM220-155MS

The FRM220-155MS is a fiber to fiber optical media converter and repeater that allows data rates up to 155Mbps. FRM220-155MS supports 2R regeneration, which consists of re-amplification and reshaping. This converter is compatible with fiber interfaces such as 100Mbps Fast Ethernet, 155Mbps STM1 and OC3. The FRM220-155MS works well with FRM220-CH20 chassis as slide-in card or with FRM220-CH01, one slot chassis as a stand-alone fiber converter. When the FRM220-155MS card is placed in the FRM220 rack with SNMP management, the management can view the converter card's status, type, version, fiber link status and alarms. The card can be configured to enable or disable the port, reset the port or enable/disable Auto Laser Shutdown.

Features

- Transparent fiber media converter / repeater up to 155Mbps (Fast Ethernet, OC3, STM-1)
- Network management via terminal, web or SNMP in FRM220-CH20 chassis
- Extends transmission from 2km to 120km over fiber
- Performs optical repeater function (Re-amplification & Reshaping)
- Supports Client / Line loop back test
- Link Fault Pass through (LFP)
- Auto Laser Shutdown (ALS)

Optical Interface	Connector	1x9 (SC, ST, FC) or SFP LC
	Data rate	Up to 155.52Mbps (Fast Ethernet, OC3, STM-1)
	Duplex mode	Full duplex
	Fiber	MM 50/125μm, 62.5/125μm. SM 9/125μm
	Distance	MM 62.2/125μm, 50/125μm. SM 9/125μm
	Wavelength	MM 1310nm, SM 1310,1550nm WDM 1310Tx/1550Rx (type A) 1550Tx/1310Rx (type B)
Indications		LED (Power, FEF, FX-Link, TX-SPD, TX-Duplex, TX-Link)
Power Input		Card : 12VDC Standalone : AC, DC options
Power Consumption		< 5W
Dimension		155 x 88 x 23mm (D x W x H)
Weight		120g
Temperature		0 ~ 50°C (Operating), -10 ~ 70°C (Storage)
Humidity		10 ~ 90% non-condensing
Certification		CE, FCC, LVD, RoHS
MTBF		65,000 hrs (25°C)

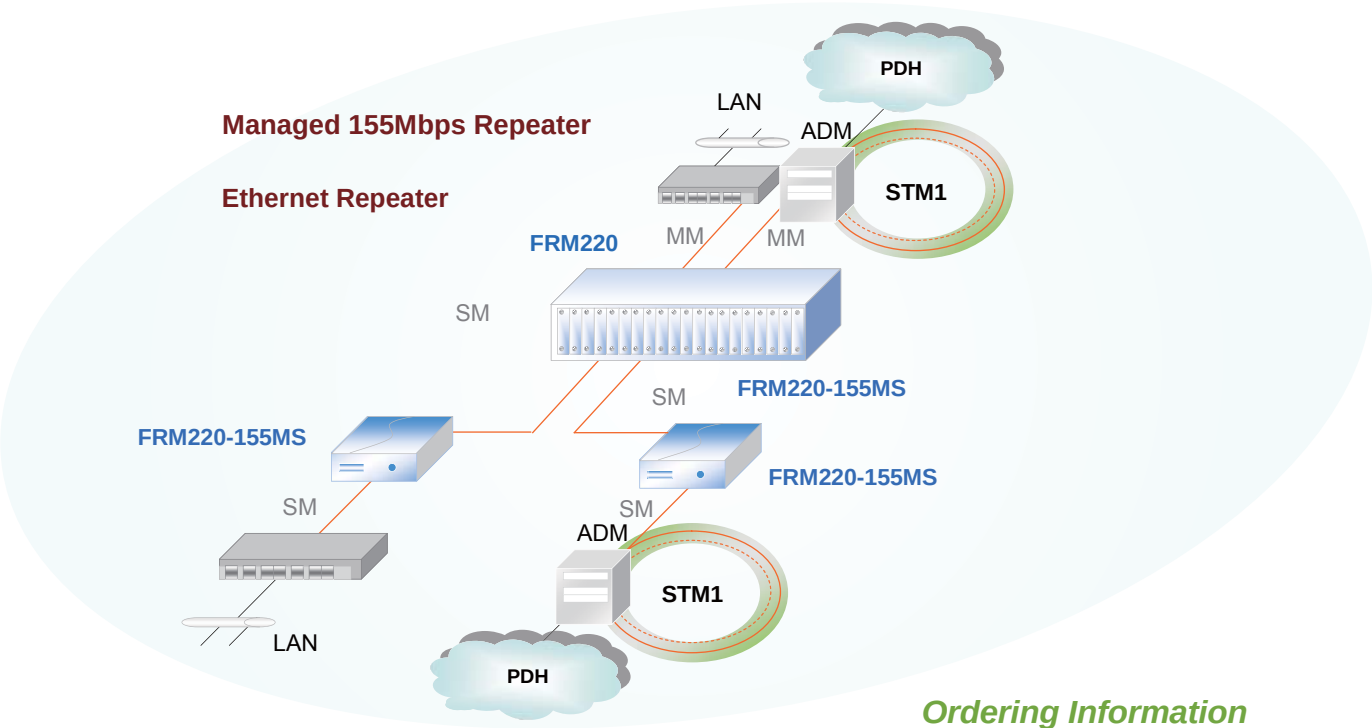

FRM220-155MS can be inserted in any FRM220 chassis.

Ordering Information

FRM220-□□□□□ Optional card

155MS

155MS-S

Example: FRM220-155MS

Gigabit Ethernet OAM/IP In-band Converter

FRM220-1000EAS-1
FRM220-1000EAS-2F

The FRM220-1000EAS is an IEEE802.3ah OAM compliant copper to fiber Gigabit Ethernet solution designed to make conversion between 10/100/1000Base-TX and 1000Base-SX/LX with SFP connector. With SNMP and Web-based management in the FRM220, the network administrator can monitor, configure and control the activity of each 802.3ah series card and remotely connected OAM compliant converter. By offering 802.3ah OAM Compliant in-band management, this converter can be completely controlled and monitored from a centrally located managed rack controlling all converter settings including band-width control, duplex, and speed configuration. This media converter is completely transparent to Layer 2 and Layer 3 protocols including IEEE 802.1q, VLAN tag, Q in Q, STP, IPX, IP, etc. The FRM220-1000EAS-1 is a single copper to single optical converter while the 1000EAS-2F is a two optical port converter.

Features

- Supports local / remote 802.3ah OAM / IP In-band management
- Stand-alone IP Based, Web GUI, Telnet, SNMP management
- 10/100/1000Base-T to 1000Base-SX/LX SFP
- Auto-Negotiation or forced mode
- Auto MDI/MDIX
- Forward 1632 bytes (max.) packets
- Supports Q in Q double tagged frame transparent
- Supports IEEE 802.1q Tag and Port based VLAN
- Supports Flow control (Pause)
- Supports OAM remote loopback to assist in diagnosing network
- problems
- Supports bandwidth control
- Supports remote CPE power fail detect (dying gasp)
- Supports Far End Fault
- Supports Link Fault Pass through (LFP)
- Supports Loop Back Test
- Supports RMON counter
- D/D function for supported SFP fiber transceiver
- Auto Laser Shutdown (ALS)
- Fiber Hardware Reset (FHR)

Optical Interface	Connector	1x9 (SC) or SFP LC
	Data rate	1000Mbps
	Duplex mode	Full duplex
	Fiber	MM 50/125μm, 62.5/125μm. SM 9/125μm
	Distance	MM 550m, 2km, SM 15/30/50/80/120km WDM 20/40/60km
	Wavelength	MM 1310nm, SM 1310,1550nm WDM 1310Tx/1550Rx (type A) 1550Tx/1310Rx (type B)
Electrical Interface	Connector	RJ45
	Data rate	10Mbps, 100Mbps, 1000Mbps
	Duplex mode	Half / Full duplex
	Cable	10Base-T Cat.3, 4, 5, UTP 100Base-TX Cat.5, 5e or higher 1000Base-T Cat.5, 5e or higher
Standard	IEEE 802.3, IEEE 802.3u, iEEE 802.1q	
Indications	LED Power, FX-Link, Test, TX-Link, TX-SPD(1000EAS-1) Power, FX-Link1/2, Test(1000EAS-2F)	
Power Input	Card	: 12VDC
	Standalone	: AC, DC options
Power Consumption	< 4W	
Dimension	155 x 88 x 23mm (D x W x H)	
Weight	120g	
Temperature	0 ~ 50°C (Operating), -10 ~ 70°C (Storage)	
Humidity	10 ~ 90% non-condensing	
Certification	CE, FCC, LVD, RoHS	
MTBF	65,000 hrs (25°C)	

802.3ah OAM/ IP GbE Media Converter

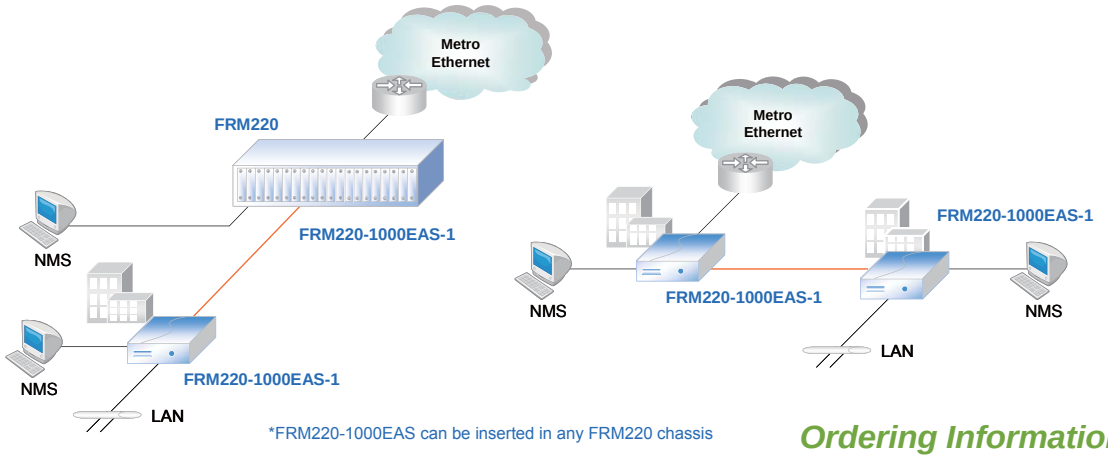

*FRM220-1000EAS can be inserted in any FRM220 chassis

Ordering Information

FRM220- □□□□□ Optional card

1000EAS-1
1000EAS-2F

Example: FRM220-1000EAS-1

Gigabit Ethernet OAM/IP In-band Converter/Switch

FRM220-1000EAS

The FRM220-1000EAS is an IEEE802.3ah OAM compliant dual copper to dual fiber Gigabit Ethernet solution designed to make conversion between 10/100/1000Base-TX and 1000Base-SX/LX with SFP connector. With SNMP and Web-based management in the FRM220, the network administrator can monitor, configure and control the activity of each 802.3ah series card and remotely connected OAM compliant converter. By offering 802.3ah OAM Compliant in-band management, this converter can be completely controlled and monitored from a centrally located managed rack controlling all converter settings including band-width control, duplex, and speed configuration. This media converter is completely transparent to Layer 2 and Layer 3 protocols including IEEE 802.1q, VLAN tag, Q in Q, STP, IPX, IP, etc.

Features

- Supports local / remote 802.3ah OAM / IP In-band management
- Stand-alone IP Based, Web GUI, Telnet, SNMP management
- 2-port 10/100/1000Base-T to 2-port 1000Base-SX/LX SFP
- Auto-Negotiation or forced mode
- Auto MDI/MDIX
- Forward 1632 bytes (max.) packets
- Supports Q in Q double tagged frame transparent
- Supports IEEE 802.1q Tag and Port based VLAN
- Supports Flow control (Pause)
- Supports OAM remote loopback to assist in diagnosing network problems
- Supports bandwidth control (70K ~ 250Mbps)
- Supports remote CPE power fail detect (dying gasp)
- Supports Far End Fault
- Supports Link Fault Pass through (LFP)
- Supports Loop Back Test
- Supports RMON counter
- D/D function for supported SFP fiber transceiver
- Auto Laser Shutdown (ALS)
- Fiber Hardware Reset (FHR)
- Online local / remote f/w upgrade
- Fiber Redundant
- VLAN
- Spanning Tree
- Port Trunking

Optical Interface	Connector	SFP LC
	Data rate	1000Mbps
	Duplex mode	Full duplex
	Fiber	MM 50/125μm, 62.5/125μm. SM 9/125μm
	Distance	MM 550m, 2km, SM 15/30/50/80/120km WDM 20/40/60km
	Wavelength	MM 1310nm, SM 1310,1550nm WDM 1310Tx/1550Rx (type A) 1550Tx/1310Rx (type B)
Electrical Interface	Connector	RJ45
	Data rate	10Mbps, 100Mbps, 1000Mbps
	Duplex mode	Half / Full duplex
	Cable	10Base-T Cat.3, 4, 5, UTP 100Base-TX Cat.5, 5e or higher 1000Base-T Cat.5, 5e or higher
Standard		IEEE 802.3, IEEE 802.3u, IEEE802.1q
Indications		LED (Power, FX-Link, Test, TX-Link, TX-SPD)
Power Input		Card : 12VDC Standalone : AC, DC options
Power Consumption		< 4W
Dimension		155 x 88 x 23mm (D x W x H)
Weight		120g
Temperature		0 ~ 50°C (Operating), -10 ~ 70°C (Storage)
Humidity		10 ~ 90% non-condensing
Certification		CE, FCC, LVD, RoHS
MTBF		65,000 hrs (25°C)

Ordering Information

FRM220-□□□□□ Optional card
1000EAS
Example: FRM220-1000EAS

Gigabit Ethernet OAM/IP In-band Converter/Switch

FRM220-1000EAS

Applications

CO to CPE application

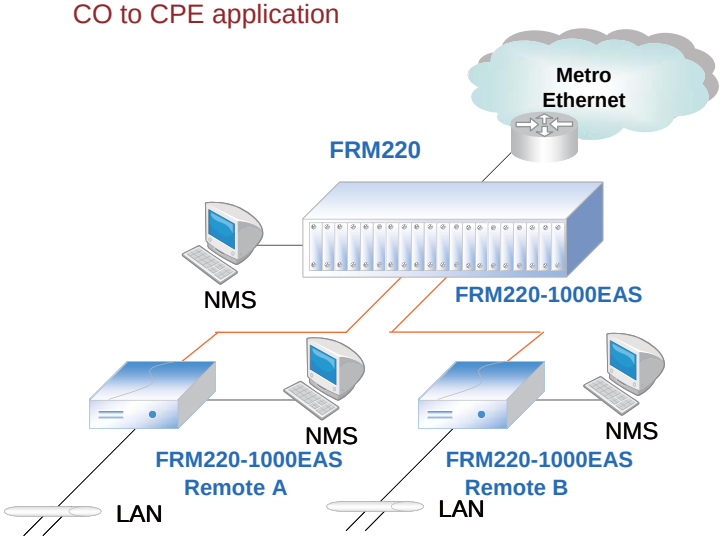

CPE to CPE application

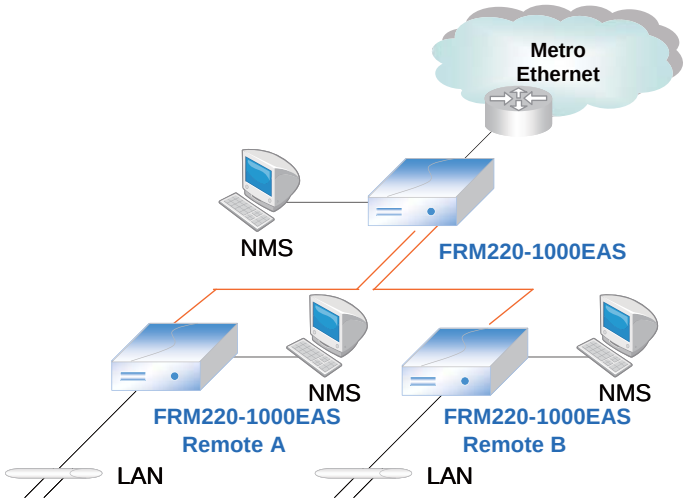

Fiber Redundant/ Trunking application

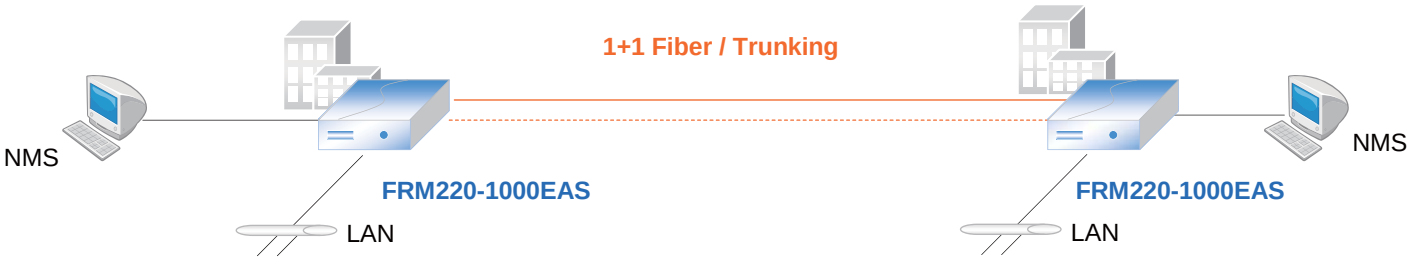

Fiber Ring application

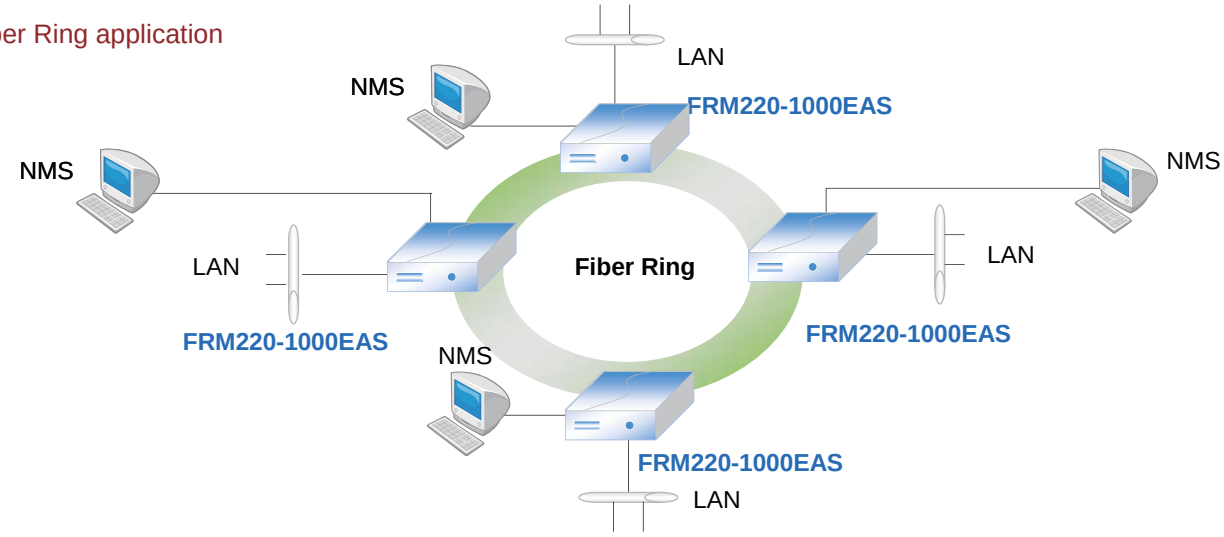

*FRM220-1000EAS can be inserted in any FRM220 chassis

Managed Gigabit Ethernet Converter

FRM220-1000E(S)-1
FRM220-1000E(S)-2F

The FRM220-1000E(s)-1 is a copper to fiber Gigabit Ethernet solution designed to make conversion between 10/100/1000Base-TX and 1000Base-SX/LX with SC or SFP LC connector. With SNMP and Web-based management in the FRM220, the Network administrator can monitor, configure and control the activity of each card in the chassis. This converter also supports features such as ingress/egress bandwidth control, auto or forced mode setting for copper Ethernet as well as auto laser shutdown.

Features

- 10/100/1000Base-T to 1000Base-SX/LX SFP Managed card
- Auto-negotiation or forced mode
- Auto MDI/MDIX
- Forward 1632 bytes (max.) packets
- Support Bandwidth Control (70k ~ 250Mbps)
- Supports Flow control (Pause)
- Support Link fault pass through (LFP) function
- Supports remote CPE power fail detect (dying gasp)
- Auto Laser Shutdown (ALS)
- Online f/w upgrade

Optical Interface	Connector	1x9 (SC) or SFP LC
	Data rate	1000Mbps
	Duplex mode	Full duplex
	Fiber	MM 50/125μm, 62.5/125μm. SM 9/125μm
	Distance	MM 550m, 2km, SM 15/30/50/80/120km WDM 20/40/60km
	Wavelength	MM 1310nm, SM 1310,1550nm WDM 1310Tx/1550Rx (type A) 1550Tx/1310Rx (type B)
Electrical Interface	Connector	RJ45
	Data rate	10Mbps, 100Mbps, 1000Mbps
	Duplex mode	Half / Full duplex
	Cable	10Base-T Cat.3, 4, 5, UTP 100Base-TX Cat.5, 5e or higher 1000Base-T Cat.5, 5e or higher
Standard		IEEE 802.3, IEEE 802.3u
Indications		LED Power, FX-Link 1/2, LFP(1000E/ES-2F) Power, FX-Link , LFP, TX-Link, TX-SPD (1000E/ES-1)
Power Input		Card : 12VDC Standalone : AC, DC options
Power Consumption		< 4W
Dimension		155 x 88 x 23mm (D x W x H)
Weight		120g
Temperature		0 ~ 50°C (Operating), -10 ~ 70°C (Storage)
Humidity		10 ~ 90% non-condensing
Certification		CE, FCC, LVD, RoHS
MTBF		65,000 hrs (25°C)

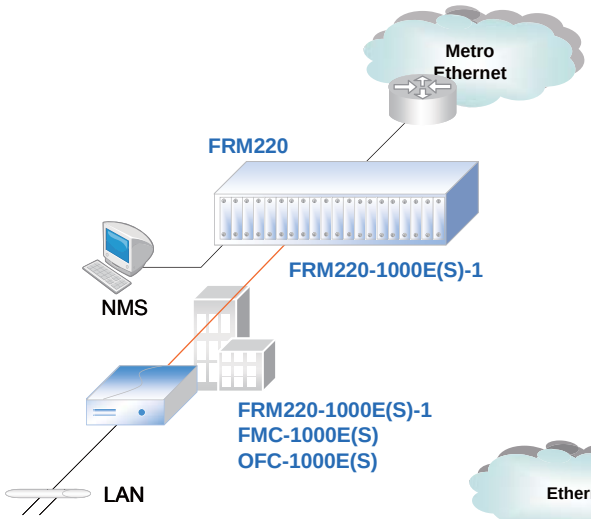

Managed GbE Media Converter

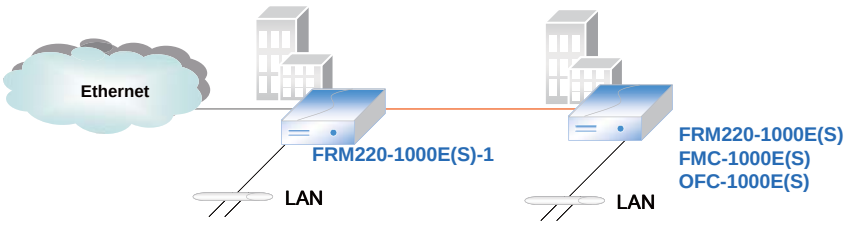

Ordering Information

FRM220-□□□□□ Optional card

1000ES-1
1000ES-2F

Example: FRM220-1000ES-1

Dual Channel Managed Gigabit Ethernet Converter

FRM220-1000EDS

The FRM220-1000EDS is a dual channel (two in one) copper to fiber Gigabit Ethernet solution designed to make conversion between 10/100/1000Base-TX and 1000Base-SX/LX with SFP connector. With SNMP and Web-based management in the FRM220, the Network administrator can monitor, configure and control the activity of each card in the chassis. This converter also supports features such as ingress/egress bandwidth control, auto or forced mode setting for copper Ethernet as well as auto laser shutdown.

Features

- 2-port 10/100/1000Base-T to 2-port 1000Base-SX/LX SFP Managed card
- Supports dual converter mode or switch mode
- Auto-negotiation or forced mode
- Auto MDI/MDIX
- Forward 1632 bytes (max.) packets
- Support Bandwidth Control (70k ~ 250Mbps)
- Supports Flow control (Pause)
- Support Link fault pass through (LFP) function
- Supports remote CPE power fail detect (dying gasp)
- Auto Laser Shutdown (ALS)
- Online f/w upgrade from FRM220-NMC

Optical Interface	Connector	SFP LC
	Data rate	1000Mbps
	Duplex mode	Full duplex
	Fiber	MM 50/125μm, 62.5/125μm. SM 9/125μm
	Distance	MM 550m, 2km, SM 15/30/50/80/120km WDM 20/40/60km
	Wavelength	MM 1310nm, SM 1310,1550nm WDM 1310Tx/1550Rx (type A) 1550Tx/1310Rx (type B)
Electrical Interface	Connector	RJ45
	Data rate	10Mbps, 100Mbps, 1000Mbps
	Duplex mode	Half / Full duplex
	Cable	10Base-T Cat.3, 4, 5, UTP 100Base-TX Cat.5, 5e or higher 1000Base-T Cat.5, 5e or higher
Standard		IEEE 802.3, IEEE 802.3u, IEEE802.3ab
Indications		LED (Power, FX-Link 1/2, 2Ch, TX-Link, TX-SPD)
Power Input		Card : 12VDC Standalone : AC, DC options
Power Consumption		< 4W
Dimension		155 x 88 x 23mm (D x W x H)
Weight		120g
Temperature		0 ~ 50°C (Operating), -10 ~ 70°C (Storage)
Humidity		10 ~ 90% non-condensing
Certification		CE, FCC, LVD, RoHS
MTBF		65,000 hrs (25°C)

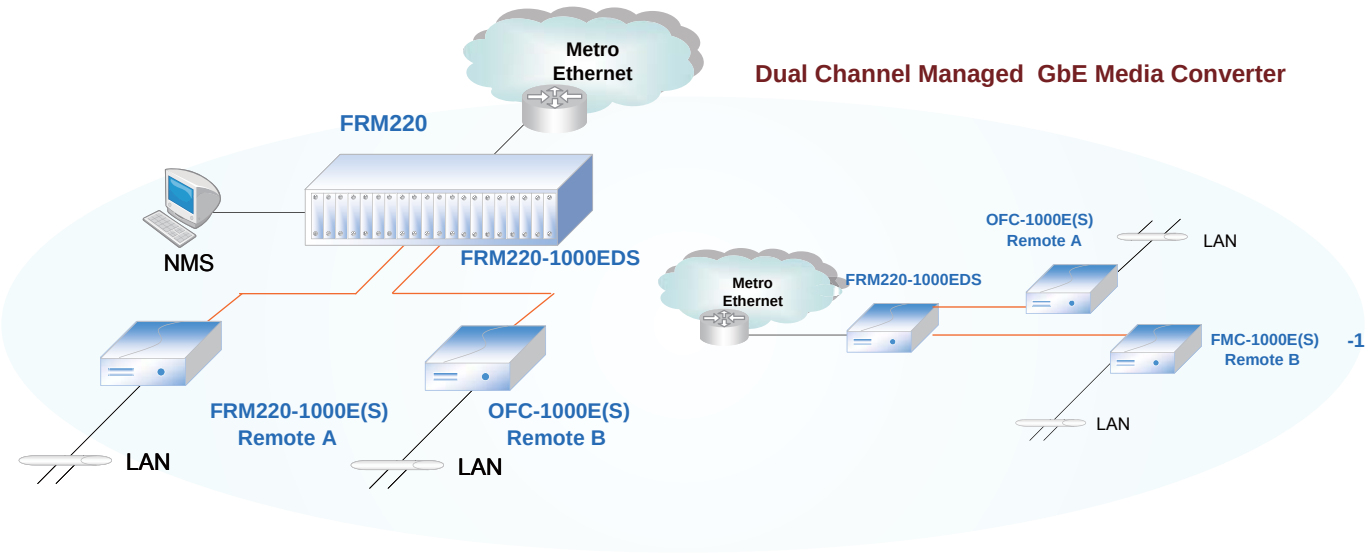

Ordering Information

FRM220- □□□□□ Optional card
1000EDS

Example: FRM220-1000EDS

Managed Gigabit Ethernet Converter

FRM220-1000T
FRM220-1000TS

The FRM220-1000TS is a transparent Gigabit Ethernet 1000Base-T to 1000Base-SX/LX SFP converter. They are managed (when installed in FRM220 with NMC) or non-managed stand-alone media converters, which give you the options to choose from a wide range of industry standard SFP modules with LC connectors. SFPs in multi-mode and single mode types are available as well as BiDi which allows bi-directional transmissions using only a single fiber cable. Because they are completely transparent to Ethernet packets, they are able to support any size frames, including undersized or jumbo packets (9K bytes). LED indicators signal the power status of the converter, UTP port speed, Link, and duplex status, FX port Link and duplex status.

Features

- 1000Base-T to 1000Base-SX/LX
- Network management via terminal or SNMP in FRM220 chassis
- Auto-negotiation or force mode
- Auto MDI/MDIX
- Forward > 9K bytes packets
- Support Link Fault Pass Through (LFP) function
- Auto Laser Shutdown (ALS)

Optical Interface	Connector	1x9 (SC) or SFP LC
	Data rate	1000Mbps
	Duplex mode	Full duplex
	Fiber	MM 50/125μm, 62.5/125μm. SM 9/125μm
	Distance	MM 550m, 2km, SM 15/30/50/80/120km WDM 20/40/60km
	Wavelength	MM 1310nm, SM 1310,1550nm WDM 1310Tx/1550Rx (type A) 1550Tx/1310Rx (type B)
Electrical Interface	Connector	RJ45
	Data rate	1000Mbps
	Duplex mode	Full duplex
	Cable	10Base-T Cat.3, 4, 5, UTP
Standard		IEEE 802.3ab
Indications		LED (Power, FX-Link, FX Duplex, TX-SPD, TX-Duplex, TX-Link)
Power Input		Card : 12VDC Standalone : AC, DC options
Power Consumption		< 4W
Dimension		155 x 88 x 23mm (D x W x H)
Weight		120g
Temperature		0 ~ 50°C (Operating), -10 ~ 70°C (Storage)
Humidity		10 ~ 90% non-condensing
Certification		CE, FCC, LVD, RoHS
MTBF		65,000 hrs (25°C)

Managed Gigabit Ethernet

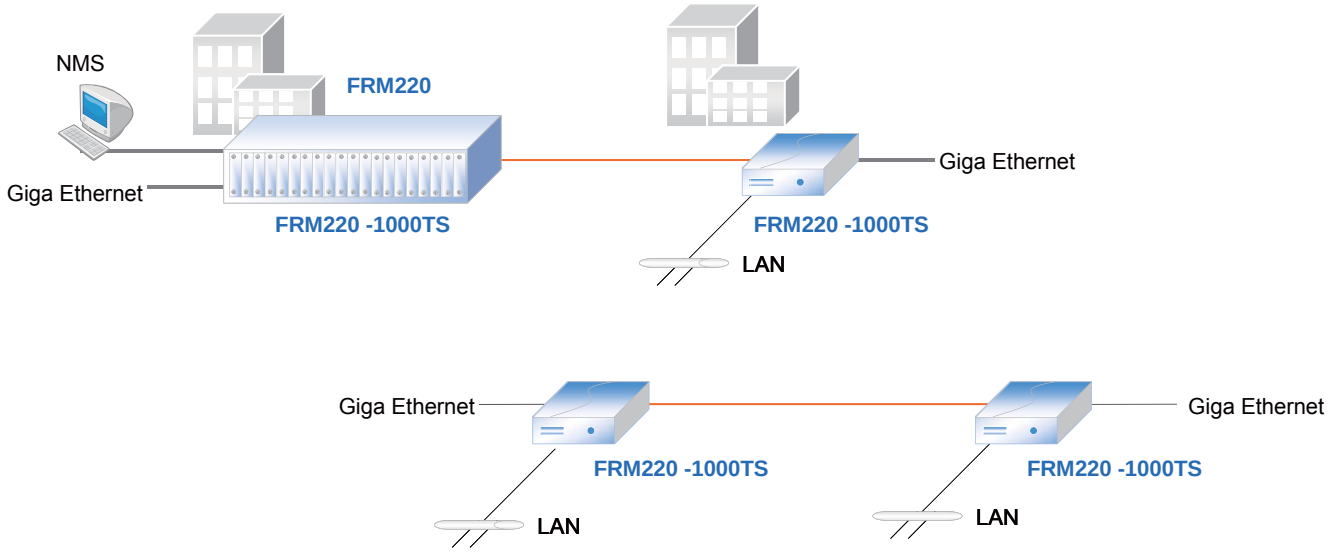

Ordering Information

FRM220-□□□□□ Optional card

1000T
1000TS

Example: FRM220-1000T

Fast Ethernet OAM/IP In-band Media Converter

FRM220-10/100A

The FRM220-10/100A is an IEEE802.3ah OAM compliant copper to fiber Fast Ethernet solution designed to make conversion between 10/100Base-TX and 100Base-FX with SC, FC or ST connector. With SNMP and Web-based management in the FRM220, the network administrator can monitor, configure and control the activity of each 802.3ah series card and remotely connected OAM compliant converter. By offering 802.3ah OAM Compliant in-band management, this converter can be completely controlled and monitored from a centrally located managed rack controlling all converter settings including band-width control, duplex, and speed configuration. This media converter is completely transparent to Layer 2 and Layer 3 protocols including IEEE 802.1q, VLAN tag, Q in Q, STP, IPX, IP, etc.

Features

- Supports local / remote 802.3ah OAM / IP In-band management
- Stand-alone IP Based, Web GUI, Telnet, SNMP management
- 10/100BASE-TX to 100BASE-FX
- Auto-Negotiation or forced mode
- Auto MDI/MDIX
- Forward 1536 bytes (max.) packets
- Supports Q in Q double tagged frame transparent
- Supports IEEE 802.1q Tag VLAN pass thru
- Bandwidth control Ingress (128K ~ 64M), Engress (128K ~ 8M)
- Support flow control (Pause)
- Supports remote CPE power fail detect (dying gasp)
- Supports QoS Port Priority
- Supports Link Fault Pass through (LFP)
- Supports Loop Back Test
- Supports RMON counter
- D/D function for supported SFP fiber transceiver
- Auto Laser Shutdown (ALS)
- Fiber Hardware Reset (FHR)
- Online remote f/w upgrade

Optical Interface	Connector	1x9 (SC, ST, FC)
	Data rate	100Mbps
	Duplex mode	Full duplex
	Fiber	MM 50/125μm, 62.5/125μm. SM 9/125μm
	Distance	MM 2km, SM 15/30/50/80/120km, WDM 20/40/60/80km
	Wavelength	MM 1310nm, SM 1310,1550nm WDM 1310Tx/1550Rx (type A) 1550Tx/1310Rx (type B)
Electrical Interface	Connector	RJ45
	Data rate	10Mbps, 100Mbps
	Duplex mode	Half / Full duplex
	Cable	10Base-T Cat.3, 4, 5, UTP, 100Base-TX Cat.5, 5e or higher
Standard		IEEE 802.3, IEEE 802.3u
Indications		LED (Power, Test, FX-Link, TX-Speed, TX-Link)
Power Input		Card : 12VDC Standalone : AC, DC options
Power Consumption		< 4W
Dimension		155 x 88 x 23mm (D x W x H)
Weight		120g
Temperature		0 ~ 50°C (Operating), -10 ~ 70°C (Storage)
Humidity		10 ~ 90% non-condensing
Certification		CE, FCC, LVD, RoHS
MTBF		65,000 hrs (25°C)

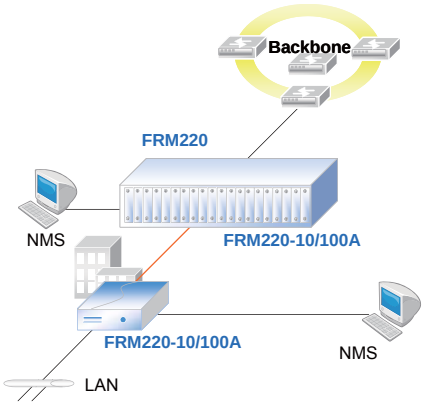

802.3ah OAM/ IP Fast Ethernet Point to Point

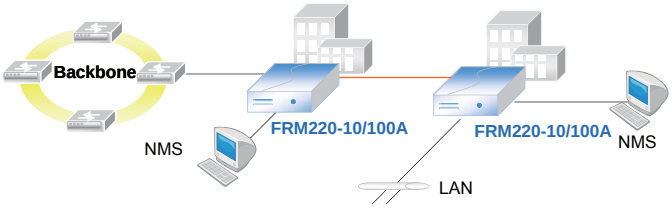

*FRM220-10/100A can be inserted in any FRM220 chassis

Ordering Information

FRM220-□□□□□ Optional card

10/100A

Example: FRM220-10/100A

Dual Channel Fast Ethernet OAM/IP In-band Media Converter

FRM220-10/100AS-2

The FRM220-10/100AS-2 is an IEEE802.3ah OAM compliant two copper to two fiber Fast Ethernet solution designed to make conversion between 10/100Base-TX and 100Base-FX with SFP. With SNMP and Web-based management in the FRM220, the network administrator can monitor, configure and control the activity of each 802.3ah series card and remotely connected OAM compliant converter. By offering 802.3ah OAM Compliant in-band management, this converter can be completely controlled and monitored from a centrally located managed rack controlling all converter settings including band-width control, duplex, and speed configuration. This media converter is completely transparent to Layer 2 and Layer 3 protocols including IEEE 802.1q, VLAN tag, Q in Q, STP, IPX, IP, etc.

Features

- Supports local / remote 802.3ah OAM / IP In-band management
- Stand-alone IP Based, Web GUI, Telnet, SNMP management
- 2-port 10/100Base-TX plus 2-port 100Base-FX SFP
- Auto-Negotiation or forced mode
- Auto MDI/MDIX
- Forward 1536 bytes (max.) packets
- Supports Q in Q double tagged frame transparent
- Supports IEEE 802.1q Tag and Port based VLAN
- Supports port trunking
- Bandwidth control Ingress (128K ~ 64M), Engress (128K ~ 8M)
- Support flow control (Pause)
- Supports remote CPE power fail detect (dying gasp)
- Supports QoS Port Priority
- Supports Link Fault Pass through (LFP)
- Supports Loop Back Test
- Supports RMON counter
- D/D function for supported SFP fiber transceiver
- Auto Laser Shutdown (ALS)
- Fiber Hardware Reset (FHR)
- Online local / remote f/w upgrade
- Fiber Redundant
- Port Trunking
- Spanning Tree

Optical Interface	Connector	SFP LC
	Data rate	100Mbps
	Duplex mode	Full duplex
	Fiber	MM 50/125μm, 62.5/125μm. SM 9/125μm
	Distance	MM 2km, SM 15/30/50/80/120km, WDM 20/40/60/80km
	Wavelength	MM 1310nm, SM 1310,1550nm WDM 1310Tx/1550Rx (type A) 1550Tx/1310Rx (type B)
Electrical Interface	Connector	RJ45
	Data rate	10Mbps, 100Mbps
	Duplex mode	Half / Full duplex
	Cable	10Base-T Cat.3, 4, 5, UTP, 100Base-TX Cat.5, 5e or higher
Standard		IEEE 802.3, IEEE 802.3u
Indications		LED (Power, Test, FX-Link, TX-Speed, TX-Link)
Power Input		Card : 12VDC Standalone : AC, DC options
Power Consumption		< 4W
Dimension		155 x 88 x 23mm (D x W x H)
Weight		120g
Temperature		0 ~ 50°C (Operating), -10 ~ 70°C (Storage)
Humidity		10 ~ 90% non-condensing
Certification		CE, FCC, LVD, RoHS
MTBF		65,000 hrs (25°C)

Dual Channel 802.3ah OAM/ IP Fast Ethernet Point to Multi-Point

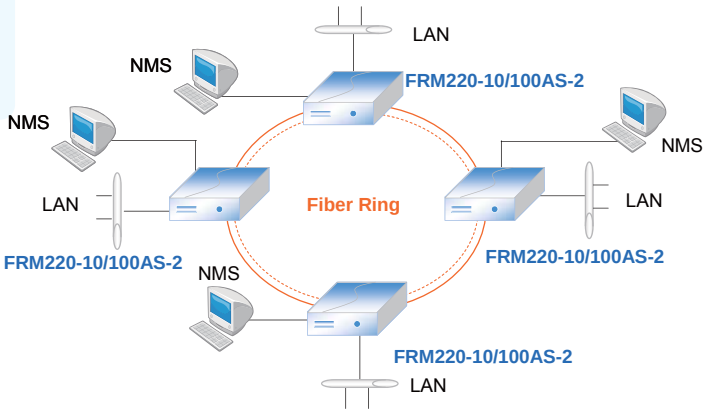

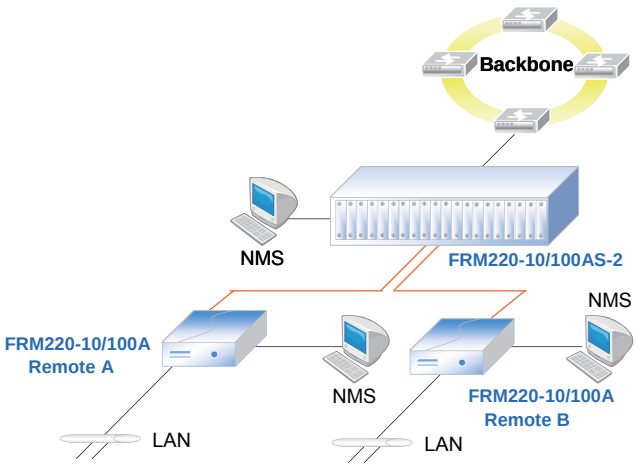

*FRM220-10/100AS-2 can be inserted in any FRM220 chassis

Ordering Information

FRM220- □□□□□ Optional card
10/100AS-2

Example: FRM220-10/100AS-2

Fast Ethernet In-band Media Converter

FRM220-10/100i
FRM220-10/100iS

The FRM220-10/100i is a 10/100Base Ethernet to 100Base-FX fiber slide-in card converter designed for central and remote applications. With advanced features like bandwidth control, this media converter is targeted for customer premises equipment in metro LAN, campus, enterprise and FTTx applications. By offering in-band management, this converter can be completely controlled and monitored from a centrally located managed rack controlling all converter settings including band-width control, duplex, and speed configuration. This media converter is completely transparent to Layer 2 and Layer 3 protocols including IEEE 802.1q, VLAN tag, Q in Q, STP, IPX, IP, etc.

Optical Interface	Connector	1x9 (SC, ST, FC) or SFP LC
	Data rate	100Mbps
	Duplex mode	Full duplex
	Fiber	MM 50/125μm, 62.5/125μm. SM 9/125μm
	Distance	MM 2km, SM 15/30/50/80/120km, WDM 20/40/60/80km
	Wavelength	MM 1310nm, SM 1310,1550nm WDM 1310Tx/1550Rx (type A) 1550Tx/1310Rx (type B)
Electrical Interface	Connector	RJ45
	Data rate	10Mbps, 100Mbps
	Duplex mode	Half / Full duplex
	Cable	10Base-T Cat.3, 4, 5, UTP, 100Base-TX Cat.5, 5e or higher
Standard	IEEE 802.3, IEEE 802.3u,TS-1000	
Indications	LED (Power, FEF, FX-Link, TX-SPD, TX-Duplex, TX-Link)	
Power Input	Card	: 12VDC
	Standalone	: AC, DC options
Power Consumption	< 4W	
Dimension	155 x 88 x 23mm (D x W x H)	
Weight	120g	
Temperature	0 ~ 50°C (Operating), -10 ~ 70°C (Storage)	
Humidity	10 ~ 90% non-condensing	
Certification	CE, FCC, LVD, RoHS	
MTBF	65,000 hrs (25°C)	

Features

- 10/100Base-TX to 100Base-FX Converter
- Auto-Negotiation or forced mode
- Auto MDI/MDIX
- Forward 2046 bytes (max.) packets in switch mode
- Forward 9K jumbo packets in converter mode
- Supports Q in Q double tagged frame transparent
- Supports IEEE 802.1q Tag VLAN pass thru
- Supports local / remote In-band management (Monitor and Configure) by the SNMP manager.
- Bandwidth control (Nx32K or Nx512Kbps)
- Support flow control (Pause)
- Supports remote CPE power fail detect (dying gasp)
- Supports Far End Fault
- Supports Link Fault Pass through (LFP)
- Supports Loop Back Test
- Supports RMON counter
- D/D function for supported SFP fiber transceiver
- Auto Laser Shutdown (ALS)
- Fiber Hardware Reset (FHR)
- Online local / remote f/w upgrade

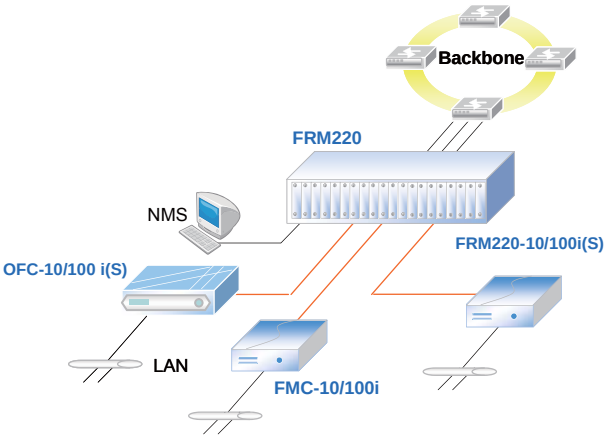

In-band Managed Fast Ethernet Media Converter

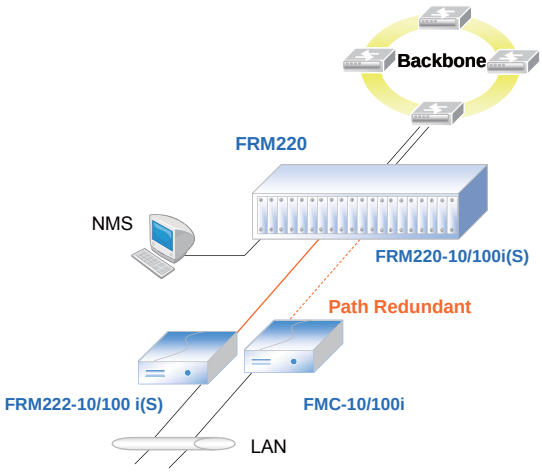

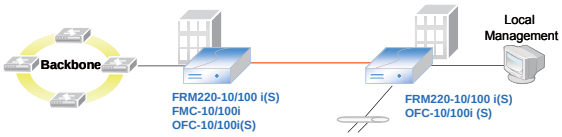

FRM220-10/100i(S) can be inserted in any FRM220 chassis.
For local management, must use either CH01M or CH02M chassis.

Ordering Information

FRM220-□□□□□ Optional card
10/100i

Example: FRM220-10/100iS

Dual Channel Fast Ethernet In-band Media Converter

FRM220-10/100iS-2

The FRM220-10/100iS-2 is a dual channel (two in one) 10/100Base Ethernet to 100Base-FX fiber slide-in card converter designed for central and remote applications. With advanced features like bandwidth control, this media converter is targeted for customer premises equipment in metro LAN, campus, enterprise and FTTx applications. By offering in-band management, this converter can be completely controlled and monitored from a centrally located managed rack controlling all converter settings including band-width control, duplex, and speed configuration. This media converter is completely transparent to Layer 2 and Layer 3 protocols including IEEE 802.1q, VLAN tag, Q in Q, STP, IPX, IP, etc.

Features

- Dual Converter 10/100Base-TX to 100Base-FX
- Auto-Negotiation or forced mode
- Auto MDI/MDIX
- Forward 2046 bytes (max.) packets in switch mode
- Forward 9K jumbo packets in converter mode
- Supports Q in Q double tagged frame transparent
- Supports IEEE 802.1q Tag VLAN pass thru
- Supports local / remote In-band management (Monitor and Configure) by the SNMP manager.
- Bandwidth control (Nx32K or Nx512Kbps)
- Support flow control (Pause)
- Supports remote CPE power fail detect (dying gasp)
- Supports Far End Fault
- Supports Link Fault Pass through (LFP)
- Supports Loop Back Test
- Supports RMON counter
- D/D function for supported SFP fiber transceiver
- Auto Laser Shutdown (ALS)
- Fiber Hardware Reset (FHR)
- Online local / remote f/w upgrade

Optical Interface	Connector	SFP LC
	Data rate	100Mbps
	Duplex mode	Full duplex
	Fiber	MM 50/125μm, 62.5/125μm. SM 9/125μm
	Distance	MM 2km, SM 15/30/50/80/120km, WDM 20/40/60/80km
	Wavelength	MM 1310nm, SM 1310,1550nm WDM 1310Tx/1550Rx (type A) 1550Tx/1310Rx (type B)
Electrical Interface	Connector	RJ45
	Data rate	10Mbps, 100Mbps
	Duplex mode	Half / Full duplex
	Cable	10Base-T Cat.3, 4, 5, UTP, 100Base-TX Cat.5, 5e or higher
Standard	IEEE 802.3, IEEE 802.3u,TS-1000	
Indications	LED (Power, FEF, FX-Link, TX-SPD, TX-Duplex, TX-Link)	
Power Input	Card	: 12VDC
	Standalone	: AC, DC options
Power Consumption	< 4W	
Dimension	155 x 88 x 23mm (D x W x H)	
Weight	120g	
Temperature	0 ~ 50°C (Operating), -10 ~ 70°C (Storage)	
Humidity	10 ~ 90% non-condensing	
Certification	CE, FCC, LVD, RoHS	
MTBF	65,000 hrs (25°C)	

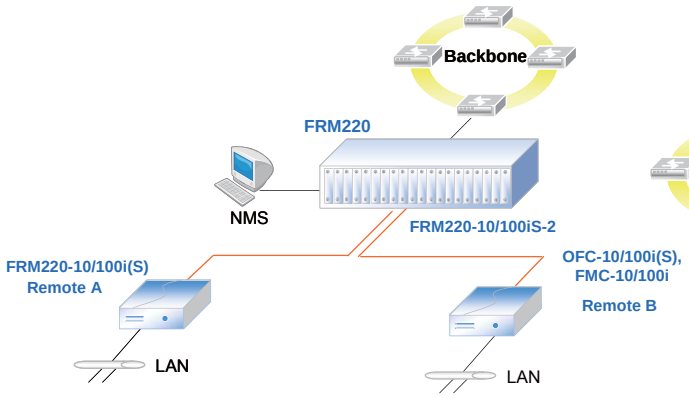

Dual Channel In-band Managed Fast Ethernet Media Converter

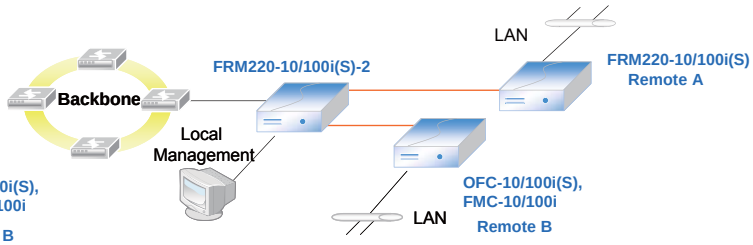

FRM220-10/100i can be inserted in any FRM220 chassis.
For local management, must use either CH01M or CH02M chassis.

Ordering Information

FRM220-□□□□□ Optional card
10/100iS-2

Example: FRM220-10/100iS-2

4-port E1/T1+100M Ethernet Fiber Multiplexer

FRM220-FOM04

FRM220-FOM04 is a modular design for 4xT1 + Fast Ethernet multi-service to dual strand fiber PDH multiplexer. FRM220-FOM04 provides T1 transmission transparently, pure 100Mbps Fast Ethernet simultaneously. The fiber optic line is based on the SFP technology that allows a flexible use of Multimode or Single mode lines and enable the support of different wavelengths and distances. The use of bi-directional SFPs maximizes the utilization of the fiber optic line and results in saving line costs. The multiplexer is equipped by default with redundant AC and DC power supplies for redundant operation. With SNMP and Web-based management in the FRM220, the Network administrator can monitor, configure and control the activity of each card in the chassis.

Features

- 4 channels unframed E1/T1
- 10/100Base-TX Ethernet
- Auto MDI/MDIX
- Auto-Negotiation or Force mode
- Supports flow control
- Supports 9K jumbo packets
- Supports Link fault pass through (LFP)
- One clear channel RS232 up to 250Kbps(Async)
- 1+1 fiber protection, less than 50ms
- Supports Digital Diagnostics Monitoring Interface (DDMI)
- AIS on signal loss on E1/T1 and fiber port
- Loopback test on E1/T1, LAN, RS232, fiber ports
- Supports Dying Gasp
- Supports local or remote In-band management (Monitor or Configure status) by SNMP manager and console port.
- Supports Order wire Ear / Microphone port.
- Supports On-Line F/W upgrade.

E1/T1 ports	
Framing	Unframed (transparent)
Bit Rate	E1:2.048 Mb/s , T1: 1.544Mb/s
Line Code	E1:AMI/HDB3, T1: AMI/B8ZS
Line Impedance	E1: Unbalanced 75 ohms (BNC cable) E1: Balanced 120 ohms (RJ-45) T1: Balanced 100 ohms (RJ-45)
Receiver sensitivity	Short haul
"Pulse" Amplitude	Nominal 2.37V+/-10% for 75 ohms Nominal 3.00V+/-10% for 120 ohms Nom
"Zero" Amplitude	+/-0.3V
Transmit Frequency Tracking	w/external clock card option
Internal Timing	+/-30 ppm
Jitter Performance	According to ITU-T G.823
Performance monitoring	According to ITU-T G.821
Standard	ITU-T G.703, G.704, G.706 and G.732
Interface Connectors	RJ-45, BNC
Test Loops	LLB (Local Loop Back) NELB (Near End Loop Back) RLB (Remote Loop Back) RRLB (Request Remote Loop Back)
Ethernet	
Interface Type	10/100Base-TX
Connector	RJ-45
Standard	IEEE 802.3, 802.3u
Duplex modes	full/half
Test	Loop back test
Indications	FX1 Link, FX2 link, E1/T1 Mode/Link/Loopback test, Order wire phone indicator, LAN Link/Speed.
Power Input	AC adapter, 12VDC
Dimensions	88x42x139mm(DxWxH)
Temperature	0 ~ 50°C (Operating), -10 ~ 70°C (Storage)
Humidity	10 ~ 90% RH (non-condensing)
Certifications	CE, FCC, RoHS

In-band Managed 4E1+100Mbps Ethernet Fiber Multiplexer

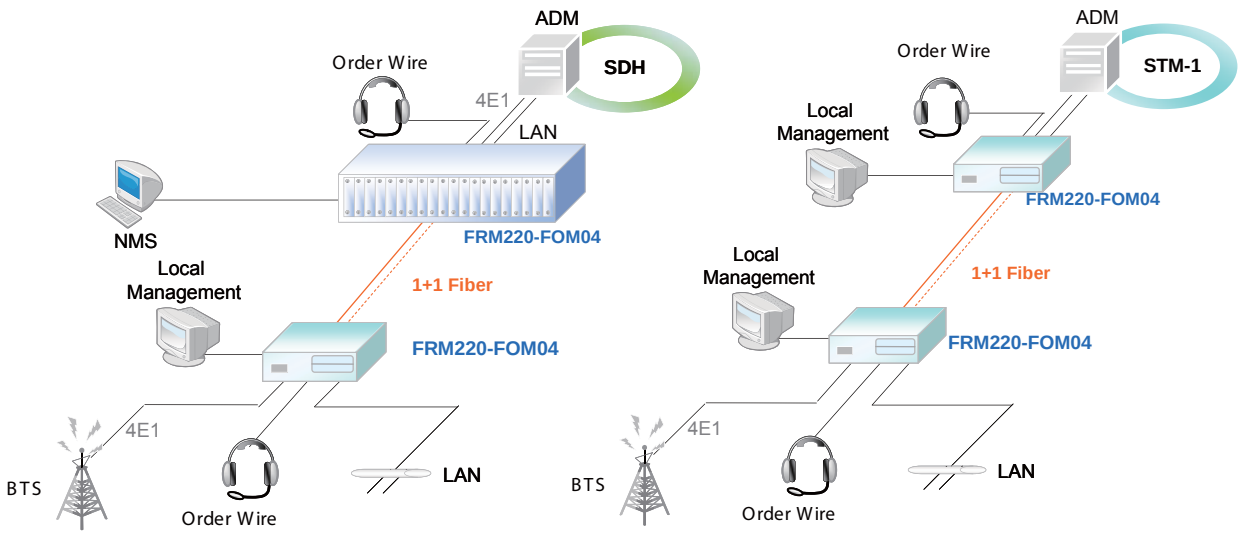

FRM220-FOM04 can only be inserted in CH02M and CH20 Chassis.

Ordering Information

FRM220- □□□□□ Optional card

FOM04

Example: FRM220-FOM04

FXO/FXS 2-wire Fiber Converter

FRM220-FXO/FXS
FRM220-FXO/FXS-S

FRM220-FXO/FXS POTS phone line converter extender is used to connect PSTN voice signals to distant Plain Old Telephone (POTS) devices. FRM220-FXO/FXS provides a fiber media transport for POTS transmission and features an RJ-11C for copper connection. A pair of FRM220-FXO/FXS is required to implement an end to end system. FXO mode connects to a telephone line or PBX and has ability to detect ringing voltages and to act as a telephone. FXS mode is the reciprocal unit and has ability to act as PSTN and connects to a telephone device. When the FRM220-FXO/FXS card is placed in the FRM220 rack with SNMP management, in-band management allows viewing the card and remote converter's status, type, version, fiber link status, on hook status and alarms. Both card and remote can be configured to enable or disable the port, reset the port and set the FXO or FXS mode.

Features

- Extend telephone voice transmission from 2km to 120km over fiber
- Network management via terminal, web or SNMP in FRM220-CH20 chassis
- Supports telephone voice transmission
- Supports caller ID pass through
- Selectable FXO or FXS mode
- Supports FXS to FXS hot line

In-band Managed FXO/FXS Fiber Loop Extender

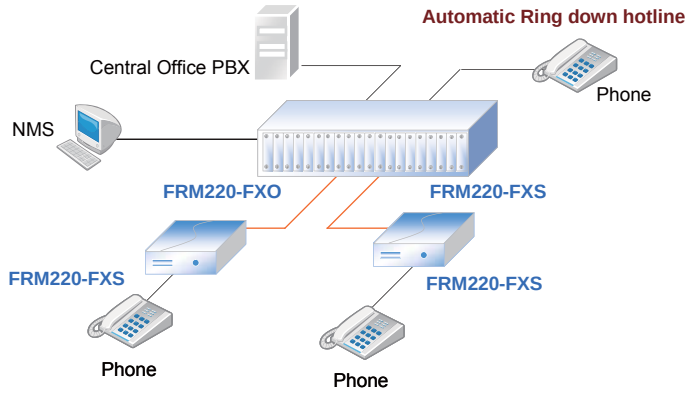

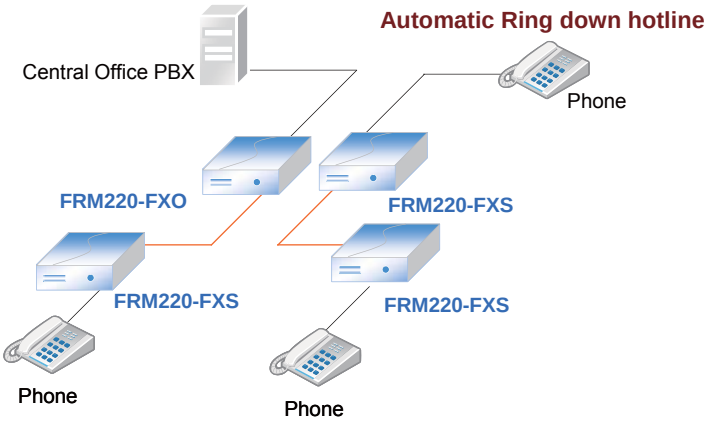

FRM220-FXO/FXS can be inserted in any FRM220 chassis.

Optical Interface	Connector	1x9 (SC) or SFP LC
	Fiber	MM 62.2/125μm, 50/125μm. SM 9/125μm
	Distance	MM 2km, SM 15/30/50/80/120km, WDM 20/40/60/80km
	Wavelength	MM 1310nm, SM 1310, 1550nm, WDM 1310Tx/1550Rx(type A), 1550Tx/1310Rx(type B)
Electrical Interface	Connector	RJ-11
	FXO mode	Impedance : 600 ohms Coding : 16 bits liner Loop Current : 10~100mA Ring Frequency : Acceptable 20 ~50Hz Insertion Loss: 0.0 ± 1.0dB at 1000Hz
	FXS mode	Impedance : 600 ohms Coding : 16 bits liner Dial: DTMF and Dial Pulse Battery Source: 48VDC ± 4V Ringing Waveform : Sine wave Ringing Frequency : 20/25/30/50 Hz selectable Ring Cadence: FXS to FXS : On / 1 sec, Off / 2 sec FXO to FXS; Reproduces the cadence detected by FXO Insertion Loss 0.0 ± 1.0dB at 1000Hz REN: 4.0B(Ring Equivalence Number)
Indications	LED (Power, FX Link, Phone Act, Test)	
Power Input	Card : 12VDC Standalone : AC, DC options	
Power Consumption	< 5W	
Dimensions	155 x 88 x 23mm (D x W x H)	
Weight	120g	
Temperature	0 ~ 50°C (Operating), -10 ~ 70°C (Storage)	
Humidity	10~90% non-condensing	
Certification	CE, FCC, LVD, RoHS	
MTBF	65,000 hrs (25°C)	

Ordering Information

FRM220- □□□□□ Optional card

FXO/FXS
FXO/FXS-S

Example: FRM220-FXO/FXS

V35/X21/RS530/449/232 Fiber modem

FRM220-Data
FRM220-Data-S

The FRM220-DATA is a media converter for high-speed (up to 8.192Mbps) synchronous or low speed synchronous and asynchronous data transmissions (V.35, RS-232, RS-530, X.21 or RS-449) over fiber optical media. When the FRM220-DATA card is placed in the FRM220 rack with SNMP management, in-band management allows viewing the card and remote converter's status, type, version, fiber link status, data link status and alarms. Both card and remote can be configured to enable or disable the port, reset the port, set the data rate, modify the clock mode, and initiate local or far end loop back tests. The FRM220-Data converter may also be paired with the FRM220-E1/T1 for Nx64K transmissions.

Optical Interface	Connector	1x9 (SC, ST, FC) or SFP LC
	Data rate	36.864Mbps
	Line coding	Scrambled NRZ
	Bit Error Rate	Less than 10-10
	Distance	MM 2km, SM 15/30/50/80/120km, WDM 20/40/60/80km
	Wavelength	1310nm, 1550nm
Electrical Interface	Connector	HDB26F w/ adapter cable for V35, X21, RS530, RS449,RS232
	Line Code	NRZ
	Baud Rate	RS-232 up to 384K async V.35/RS-530 up to 9152k sync where n=1 to 143 (64K ~ 9152KKbps)
	Clock source	Internal, Recovery, External
Standard	ITU-T	
Indications	LED (Power, FX Link, RTS, Test , TD, RD, CTS, DCD)	
Power Input	Card	: 12VDC
	Standalone	: AC, DC options (please refer to page xx for details)
Power Consumption	< 5W	
Dimensions	155 x 88 x 23mm (D x W x H)	
Weight	120g	
Temperature	0 ~ 50°C (Operating), -10 ~ 70°C (Storage)	
Humidity	10~90% non-condensing	
Certification	CE, FCC, LVD, RoHS	
MTBF	65,000 hrs (25°C)	

Features

- Synchronous or Asynchronous data over fiber
- In-band network management via terminal, web or SNMP in FRM220-CH20 chassis
- Software selectable interface, V.35, X.21, RS530, RS449, RS232
- Software selectable DCE or DTE mode
- User selectable data rate n x 64kbps, up to 9Mbps
- Independent clock mode setting, (internal, external, or recovery) for transmit and receive
- Electrical and optical loop back tests
- Compatible with FRM220-E1 on same fiber link for N x 64k

In-band Managed PDH Fiber Modem

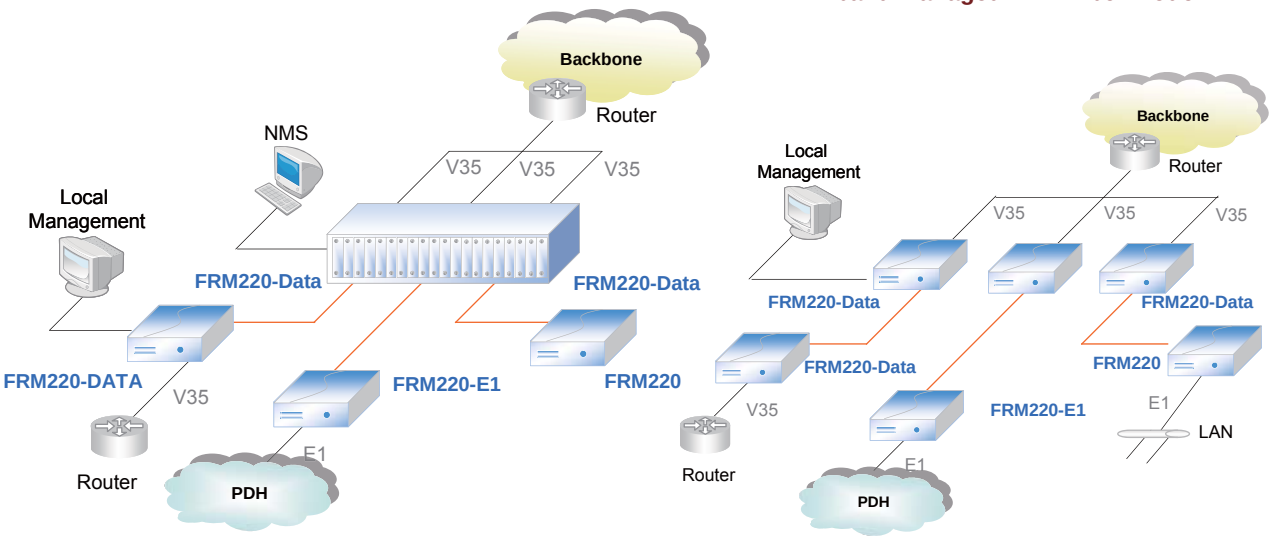

FRM220-Data can be inserted in any FRM220 chassis.
For local management, must use either CH01M or CH02M chassis.

Ordering Information

FRM220- □□□□□ Optional card

DATA
DATA-S

Example: FRM220-DATA

RS485/422/232 Fiber modem

FRM220-Serial
FRM220-Serial-S

The FRM220-Serial/485 provides a fiber converter solution to extend asynchronous RS-485 or RS-232 transmission distance up to 2km over multimode fiber or up to 120km over single mode fiber. The converter is equipped with multiple interface circuits for connection to RS-232 or RS-485/422 (2 or 4 wire, full or half duplex). The FRM220-Serial secures data transmission over EMI resistant fiber at speeds up to 460kbps for RS-232 or up to 1024kbps for RS-485/422. When the FRM220-Serial/485 card is placed in the FRM220 rack with SNMP management, in-band management allows viewing the card and remote converter's status, type, version, fiber link status, data link status and alarms. Both card and remote can be configured to enable or disable the port, reset the port and set the interface type.

Optical Interface	Connector	1x9 (SC, ST, FC) or SFP LC
	Data rate	36.864Mbps
	Line coding	Scrambled NRZ
	Bit Error Rate	Less than 10-10
	Fiber	MM 62.2/125μm, 50/125μm. SM 9/125μm
	Distance	MM 2km, SM 15/30/50/80/120km, WDM 20/40/60/80km
	Wavelength	MM 1310nm, SM 1310, 1550nm, WDM 1310Tx/1550Rx(type A) 1550Tx/1310Rx(type B)
Electrical Interface	Connector	6 pins Terminal block
	Data Signal Formats	RS485 2-wire RS422 4-wire RS232 RTS/CTS 5-wire RS232 3-wire
	Baud Rate	RS422, RS485 up to 1024kbps RS232 up to 256kbps
	Bit Error Rate	Less than 10^{-10}
Standard		EIA/TIA RS485, RS422, RS232
LEDs		Power, FX Link, DI, DO, Test
Power Input		Card : 12VDC Standalone : AC, DC options
Power Consumption		< 5W
Dimensions		155 x 88 x 23mm (D x W x H)
Weight		120g
Temperature		0 ~ 50°C (Operating), -10 ~ 70°C (Storage)
Humidity		10~90% non-condensing
Certification		CE, FCC, LVD, RoHS
MTBF		65,000 hrs (25°C)

Features

- Extend asynchronous serial transmission from 2km to 120km over fiber
- In-band network management via terminal, web or SNMP in FRM220-CH20 chassis
- Software selectable data interface for RS232/ 422/ 485
- Software selectable two wires (half duplex) or four wires (full duplex) RS485
- Software selectable three or five wires RS232
- Speeds up to 256kbps for RS232 (Async. mode)
- Speeds up to 1Mbps for RS485/ 422

In-band Managed RS485/422/232 Media Converter

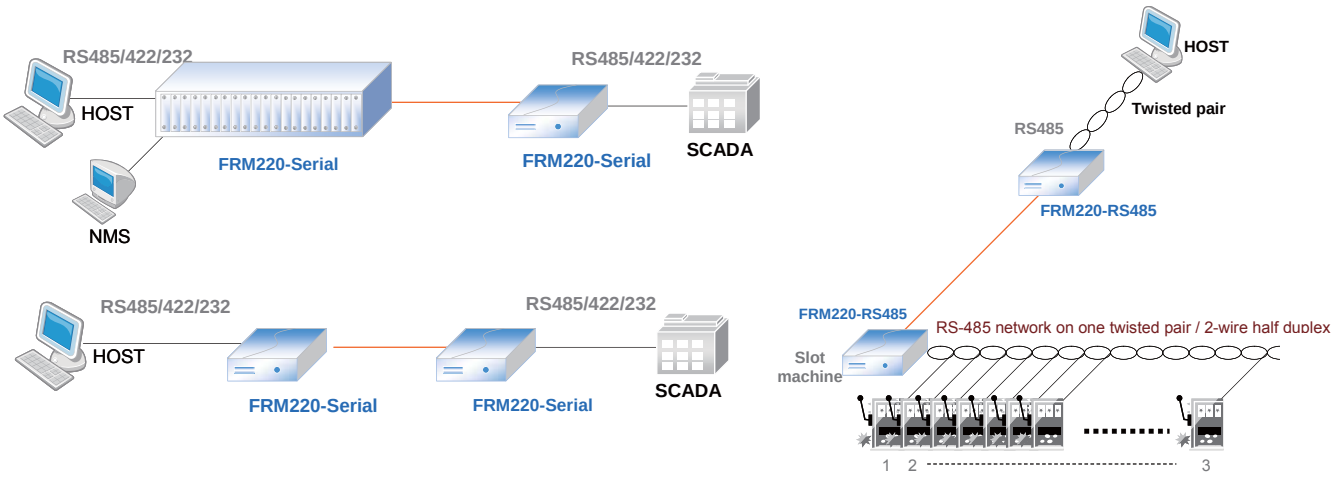

FRM220-Serial can be inserted in any FRM220 chassis.

Ordering Information

FRM220- □□□□□ Optional card

Serial

Example: FRM220-Serial-S

E1/T1 Fiber modem

FRM220-E1/T1R
FRM220-E1/T1R-S

The FRM220-E1/T1 is a fiber media transport for G.703 E1/T1 transmissions. The BNC model provides unbalanced 75 Ohm coaxial E1 connections while the RJ-45 model provides switchable balanced 120 Ohm E1 or 100 Ohm T1 connections over twisted pair wiring. When the FRM220-E1/T1 card is placed in the FRM220 rack with in-band management, the card status, type, version, fiber link status, E1 or T1 link status and alarms for both local card and remote unit can all be displayed. Configuration is also available to enable or disable the port, reset the port, do far end fault setting, and initiate local or far end loop-back tests. When set for E1 mode, the FRM220-E1/T1 also supports fractional (structured) E1 when connected to a remote FRM220-Data, synchronous data communications converter. In an E1 transmission network where end connection requires synchronous data communication such as V.35 or RS-530 (X.21, RS-449), these units eliminate the need for an extra CSU/DSU.

Optical Interface	Connector	1x9 (SC, ST, FC) or SFP LC
	Distance	MM 2km, SM 15/30/50/80/120km, WDM 20/40/60/80km
	Wavelength	MM 1310nm, SM 1310, 1550nm, WDM 1310Tx/1550Rx(type A), 1550Tx/1310Rx(type B)
Optical Interface	Connector	RJ45 E1-120Ω, T1-100 Ω, BNC E1-75 Ω
	Data rate	E1: 2.048Mpbs, T1:1.544Mbps
	Line Code	E1 HDB3/AMI, T1: B8ZS/AMI
	Cable type	Cat.3 or higher Twisted-Pair cable
Standard		E1 ITU-T G.703, G.704, G.706, G.732, G.823
		T1 ITU-T G.703, G.704, AT&T, TR-62411, ANSI T1.403
Indications		Power, FX-Link, E1/T1 SIG, Test, SYN, RD, TD, AIS
	(E1/T1R)	Power, FX-Link, E1 SIG, Test(E1B)
Power Input	Card	: 12VDC
	Standalone	: AC, DC options
Power Consumption		< 5W
Dimensions		155 x 88 x 23mm (D x W x H)
Weight		120g
Temperature		0 ~ 50°C (Operating), -10 ~ 70°C (Storage)
Humidity		10~90% non-condensing
Certification		CE, FCC, LVD, RoHS
MTBF		65,000 hrs (25°C)

Features

- In-band network Managed via Terminal, web or SNMP in FRM220-CH20 chassis
- T1/E1 RJ-45 (USOC RJ-48C) or E1 Coax (BNC) to Fiber converter
- Supports AMI or B8ZS/HDB3 line codes
- T1 supports unframed to FRM220-Data
- E1 supports unframed or fractional (N x 64k) to FRM220-Data
- User selectable E1 or T1 setting
- Electrical and optical Loop back tests

In-band Managed PDH Fiber Modem

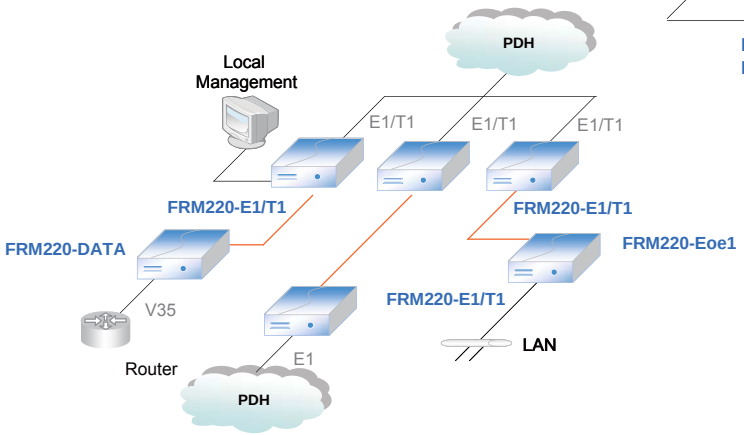

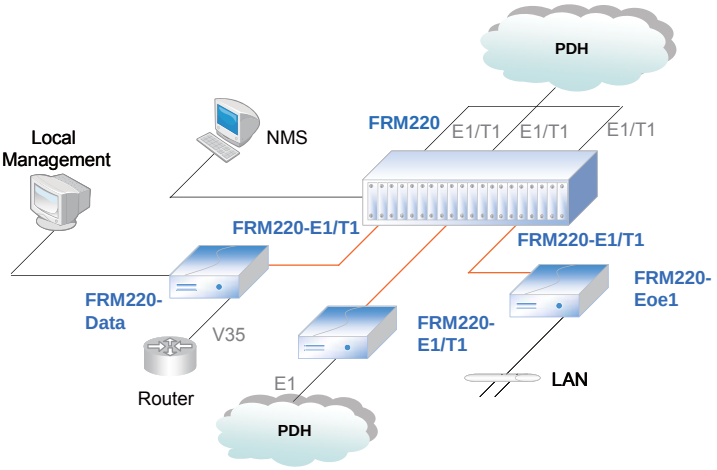

FRM220-E1/T1 can be inserted in any FRM220 chassis.
For local management, must use either CH01M or CH02M chassis.

Ordering Information

FRM220-□□□□□ Optional card

E1/T1R
E1B
E1/T1R-S
E1B-S

Example: FRM220-E1/T1R

Ethernet over E1 fiber modem

FRM220-Eoe1

The FRM220-Eoe1 is a Channel Service Unit for Unframed ITU-T G.703 E1 that features a built-in Ethernet bridge. The CSU has built-in Network Terminating Unit (NTU) and connects to unframed E1 via twisted pairs and a shielded RJ-45 connector. The FRM220-Eoe1 Ethernet Bridge uses HDLC encapsulation to transport Ethernet packets across the WAN. The FRM220-Eoe1 is very easy to configure by DIP switch setting. When the FRM220-Eoe1 card is placed in the FRM220 rack with SNMP management, the management can configure and view the converter card's status, type, version , fiber link status and alarms.

Features

- Supports 10/100Base-TX Ethernet over Unframed E1
- Automatic address learning, aging and deletion after 5 minutes
- Auto padding of undersized packets to meet the minimum Ethernet packet size requirement
- Buffering modes can be selected according to the setting of WAN and LAN line speeds
- Forwarding and filtering rate at WAN speed with throughput latency of 1 frame
- Fully compatible with FRM220-CH20 chassis
- SNMP management with FRM220-CH20 chassis
- LED Alarm indication

Optical Interface	Framing	Unframed
	Standards	ITU-T G.703/G.704/G.706 & G.732, G.823
	Bit rate	2.048Mbps± 50ppm
	Line code	AMI/HDB3
	Clock setting	Internal OSC or recovery clock
	Receive level	- 43dB
	Line impedance	BNC 75 ohm, RJ45 120 ohm
	Jitter Performance	Complies with ITU-T G.823
	Pulse Mask	Complies with ITU-T G.703
	Pulse amplitude	Nominal 2.37V ± 10%
	Connector	BNC or RJ45 (model dependent)
	Diagnostics	Digital remote loopback
Electrical Interface	Standard	IEEE 802.3u
	Data rate	100Base-FX, Full duplex
	Connector	SFP
Indications		Power, Signal loss ,Alarm, LAN link /ACT, SD(100Base-FX)
Power Input		Card : 12 VDC Standalone : AC, DC option
Power Consumption		< 5W
Dimensions		DC12 : 160 x 88 x 24 (D x W x H)mm AC/DC/AD : 201 x 135 x 35 (D x W x H)mm
Weight		DC 12 : 280g ,AC/DC/AD : 580g
Temperature		0~50°C (Operating) ,-20~70°C (Storage)
Humidity		10 ~ 90% RH (non-condensing)
Certifications		CE, FCC, RoHS
MTBF		6,500 hrs (25°C)

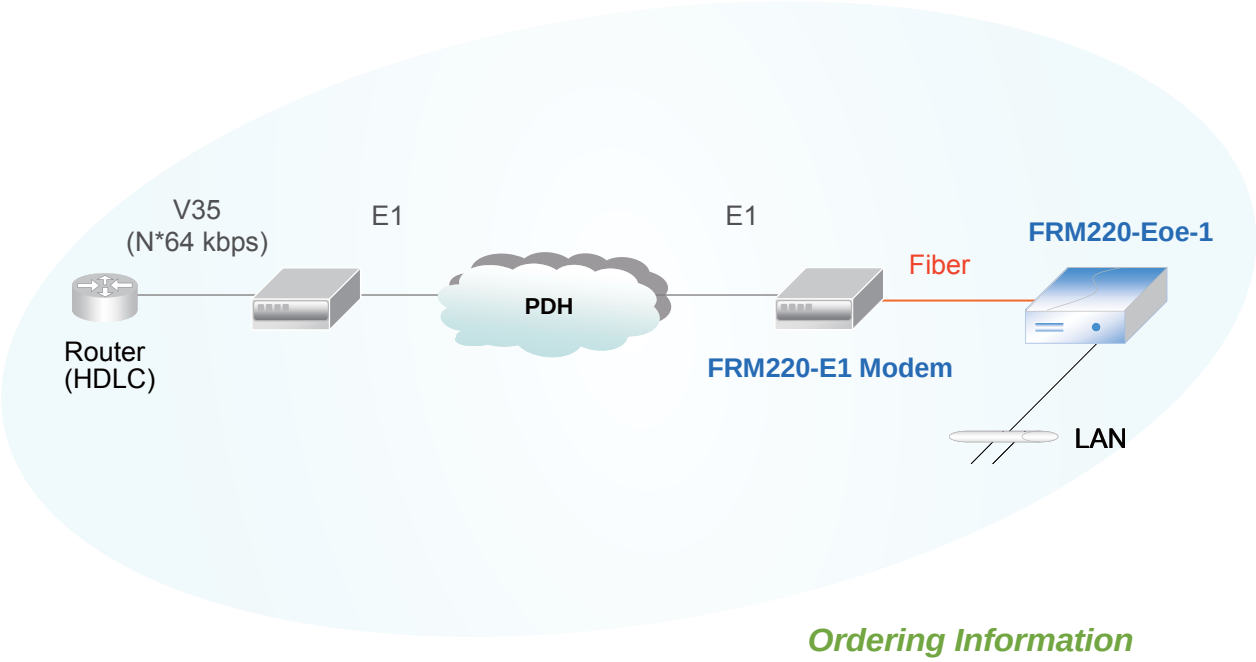

Ordering Information

FRM220-□□□□□ Model Type

Eoe-1

Example: FRM220-Eoe-1

Slide-in card & stand-alone
RS-485/232 Daisy Chain fiber converter

FRM220-Serial/FDC

The FRM220-Serial/FDC provides a dual fiber connection converter solution to extend asynchronous RS-485 or RS-232 transmission distance up to 2km over multimode fiber or up to 120km over single mode fiber. The dual fiber inputs allow connecting multiple devices in a cascade or "daisy chain" fashion as well as creating ring architecture for fiber redundancy. The converter is equipped with multiple interface circuits for connection to RS-232 or RS-485/422 (2 or 4 wire, full or half duplex). The FRM220-Serial/FDC secures data transmission over EMI resistant fiber at speeds up to 256kbps for RS-232 or up to 1024kbps for RS-485/422. When the FRM220-Serial/FDC card is placed in the FRM220 rack with SNMP management, in-band management allows viewing the card and remote converter's status, type, version, fiber link status, data link status and alarms. Both card and remote can be configured to enable or disable the port and set the interface type.

Features

- Extend asynchronous serial transmission from 2km to 120km over fiber
- In-band management via terminal, GUI or SNMP in FRM220-CH chassis
- Two fiber ports support daisy chain and ring architecture
- Multi-drop operation over fiber ring
- Software selectable data interface for RS232/ 422/ 485
- Software selectable two wires (half duplex) or four wires (full duplex) RS485
- Software selectable three or five wires RS232
- Speeds up to 256kbps for RS232 (Async. mode)
- Speeds up to 1Mbps for RS485/422

Optical Interface	Connector :	1x9 (SC, ST, FC)
	Data rate :	31.104Mbps
	Line coding :	Scrambled NRZ
	Bit Error Rate :	Less than 10^{-11}
	Cable type :	MM 62.2/125∝m, 5/125∝m.
		SM 9/125∝m
	Distance :	MM 2km, SM 15/30/50/80/120km,
		WDM 20/40/60/80km
	Wavelength :	1310nm, 1550nm
Electrical Interface	Connector :	6 pins Terminal block
	Data :	Signal Formats
		RS485/422 2-wire , 4-wire
		RS232 RTS/CTS 5-wire, 3-wire
		RS423 RTS/CTS 5-wire, 3-wire
		TTL 3-were
	Baud Rate :	RS422, RS485 up to 1024kbps
		RS232 up to 256kbps
		TTL up to 1024kbps
Standard		EIA/TIA RS485, RS422, RS232
LEDs		Power, FX-Link1, FX-Link2, Test, Master, Ring TD, RD
Power		< 5W
Power Consumption		FRM301/FIB1: 123 x 86 x 20mm
Dimensions		FIB1: 138 x 86 x 40mm (D x W x H)
Weight		0~50°C (Operating) ,0~70°C (Storage)
Temperature		10~90% non-condensing
Humidity		CE, FCC, LVD, RoHS
Certification		65,000 h (25°C)

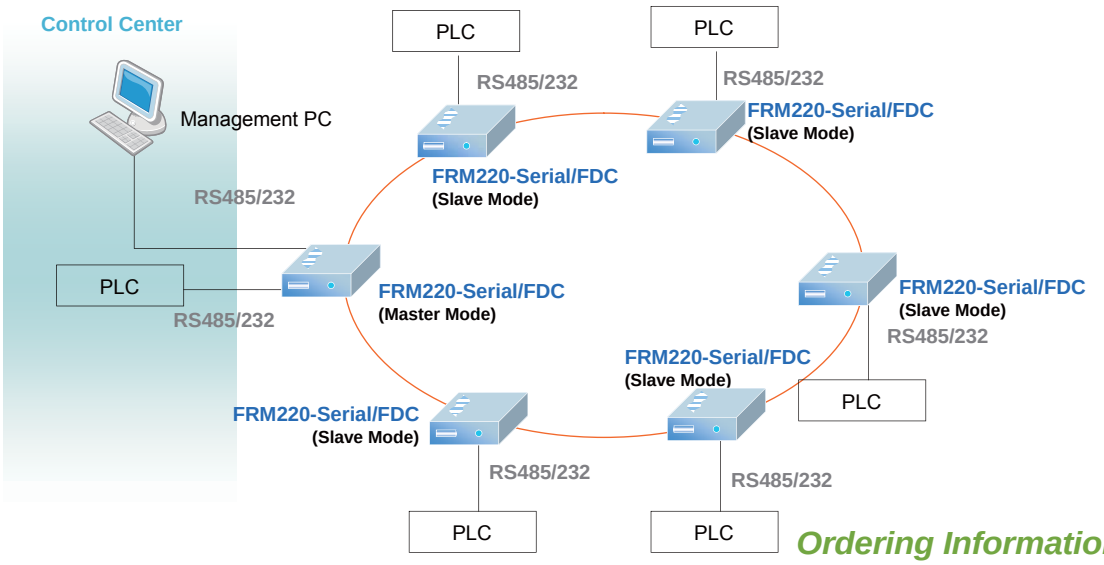

Ordering Information

FRM220- □□□□□ Model type

Serial/FDC

Example: FRM220-Serial/FDC

E1 Inverse Multiplexer

FRM220A-E1/ET100T

The FRM220-E1/ET100 is a slide-in card E1 inverse multiplexer capable of bundling 1x E1 lines for cost-effective connection of 10/100BaseTX or 100Base-FX LANs over multiple E1 transports. The FRM220-E1/ET100 inverse multiplexer transmits up to a 1.984Mbps Ethernet bridge channel (GFP-F encapsulated) over E1 links. The FRM220-E1/ET100 bridges the gap between E1 and E3, allowing bridges to operate at faster rates. It also provides high speed access to SDH/SONET backbones where the only access services available are E1 lines. The FRM220-E1/ET100 supports an E1 attenuation of up to 43 dB on twisted pair or coax cable. This provides an approximate operating range up to 2km (using 22AWG). The FRM220-E1/ET100 fully meets E1 specifications including ITU-T G.703 and G.823. The FRM220-E1/ET100 features diagnostic capabilities for performing remote loopback. The operator at either end of the line may test both the FRM220-E1/ET100 and the line in the digital loopback mode. The Ethernet copper interface supports auto-negotiation and auto MDI/MDIX, allowing plug-and-play Ethernet connection without any additional configuration.

Features

- Connects one Fast Ethernet over E1 links (1.984Mbps)
- Built-in GFP bridge operates at WAN rate
- Auto-Negotiation
- Maximum 220ms delay variance between E1 link
- Unbalanced E1/BNC or balanced E1/RJ45
- Fully compatible with FRM220A-CH20 chassis
- SNMP management with FRM220A-CH20 chassis
- LED Alarm indication

Interface	Framing CCS+CRC
	Standard ITU-T G.703/G.704/G.706 & G.732, G.823
	Bit rate 2.048Mbps± 50ppm
	Line code HDB3
	Clock setting Internal OSC or recovery clock
	Receive level -43dB
	Line impedance 75 ohm (BNC) / 120 ohm (RJ45)
	Jitter Performance Complies with ITU-T G.823
	Pulse Mask Complies with ITU-T G.703
	Pulse amplitude Nominal 2.37V ± 10%
	Delay Variance 220ms
	Connector RJ45, BNC
	Diagnostics Digital remote loopback
	Standard IEEE 802.3, 802.3u
	Data rate 10/100Base-TX, Half/Full duplex
	Connector RJ45 10/100Base-TX
Indications	Power, ALM,E1 signal loss ,
	E1 Alarm（AIS，LOF， RAI, LOMF),
	LAN link /ACT, 10/100M , SD(100Base-FX)
Power Input	AC adapter : 100~240VAC to 12VDC
	AC 100 ~ 240V, DC -18 ~ 75V
Power Consumption	< 12W
Dimensions	DC12 : 160 x 88 x 24mm (D x W x H)
	AC/DC48/AD : 201 x 135 x 35mm (D x W x H)
Weight	DC 12 : 280g, AC/DC48/AD : 580g
Temperature	0 ~ 50°C (Operating), -10 ~ 70°C (Storage)
Humidity	10 ~ 90% RH (non-condensing)
Certifications	CE, FCC, RoHS
MTBF	6,500 hrs (25°C)

Managed E1 Inverse Multiplexer

Delivering point-to-point Fast Ethernet service across E1 circuits

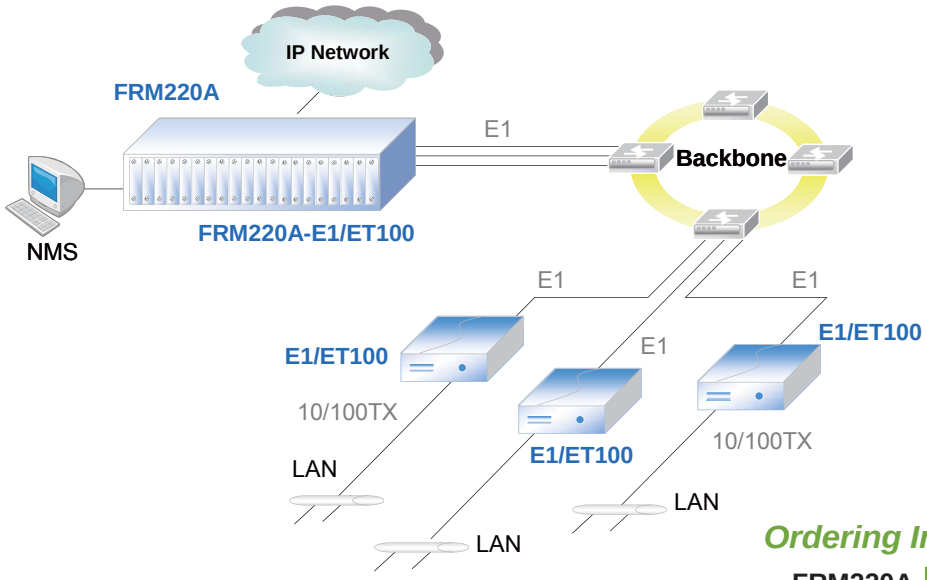

FRM220-E1/ET100 can be inserted in any FRM220 chassis.
For local management, must use either CH01M or CH02M chassis.

Ordering Information

FRM220A-□□□□□ Optional card

E1/ET100T

Example: FRM220-E1/ET100T

5E1 Inverse Multiplexer

FRM220A-5E1/ET100

The FRM220-5E1/ET100 is a slide-in card E1 inverse multiplexer capable of bundling up to 5 E1 lines for cost-effective connection of 10/100BaseTX or 100Base-FX LANs over multiple E1 transports. The FRM220-5E1/ET100 inverse multiplexer transmits up to a 9.92Mbps Ethernet bridge channel (GFP-F encapsulated) over 5 E1 links. The FRM220-5E/ET100 bridges the gap between E1 and E3, allowing bridges to operate at faster rates. It also provides high speed access to SDH/SONET backbones where the only access services available are E1 lines. The FRM220-5E1/ET100 supports an E1 attenuation of up to 43 dB on twisted pair or coax cable. This provides an approximate operating range up to 2km (using 22AWG). The FRM220-5E1/ET100 fully meets E1 specifications including ITU-T G.703 and G.823. The FRM220-5E1/ET100 features diagnostic capabilities for performing remote loopback. The operator at either end of the line may test both the FRM220-5E1/ET100 and the line in the digital loopback mode. The Ethernet copper interface supports auto-negotiation and auto MDI/MDIX, allowing plug-and-play Ethernet connection without any additional configuration.

Features

- Connects one Fast Ethernet over 5E1 links (1.984Mbps to 9.92Mbps)
- Built-in GFP bridge operates at WAN rate
- Auto-Negotiation
- Maximum 220ms delay variance between E1 link
- Unbalanced E1/BNC or balanced E1/RJ45
- Fully compatible with FRM220A-CH20 chassis
- SNMP management with FRM220A-CH20 chassis
- LED Alarm indication

Interface	Framing	CCS+CRC
	Standard	ITU-T G.703/G.704/G.706 & G.732, G.823
	Bit rate	2.048Mbps± 50ppm (up to 5E1)
	Line code	HDB3
	Clock setting	Internal OSC or recovery clock
	Receive level	-43dB
	Line impedance	75 ohm (BNC) / 120 ohm (RJ45)
	Jitter Performance	Complies with ITU-T G.823
	Pulse Mask	Complies with ITU-T G.703
	Pulse amplitude	Nominal 2.37V ± 10%
	Delay Variance	220ms
	Connector	RJ45, BNC
	Diagnostics	Digital remote loopback
	Standard	IEEE 802.3, 802.3u
	Data rate	10/100Base-TX, Half/Full duplex 100Base-FX
	Connector	RJ45 10/100Base-TX SFP-LC 100Base-FX
Indications		Power, ALM,E1 signal loss , E1 Alarm（AIS，LOF， RAI, LOMF), LAN link /ACT, 10/100M , SD(100Base-FX)
Power Input		AC adapter : 100~240VAC to 12VDC AC 100 ~ 240V, DC -18 ~ 75V
Power Consumption		< 12W
Dimensions		DC12 : 160 x 88 x 24 (D x W x H)mm AC/DC48/AD : 201 x 135 x 35 (D x W x H)mm
Weight		DC 12 : 280g ， AC/DC48/AD : 580g
Temperature		0 ~ 50°C (Operating), -10 ~ 70°C (Storage)
Humidity		10 ~ 90% RH (non-condensing)
Certifications		CE, FCC, RoHS
MTBF		7,500 hrs (25°C)

Managed 5E1 Inverse Multiplexer

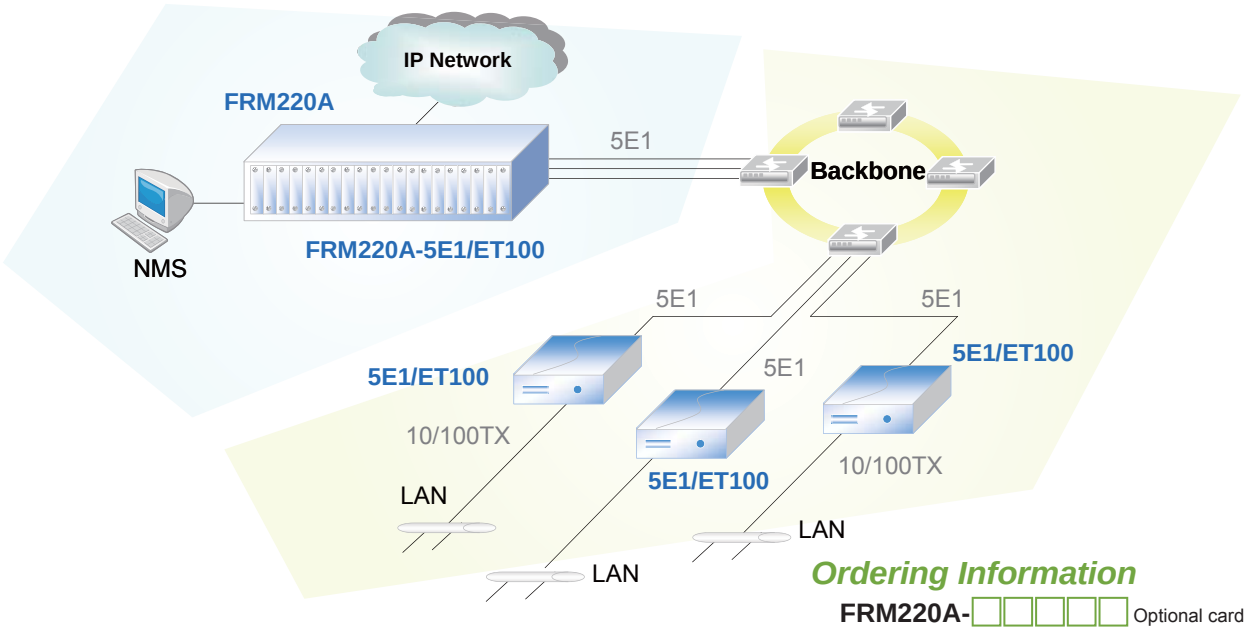

Ordering Information

FRM220A-□□□□□ Optional card

5E1/ET100T
5E1/ET100S

Example: FRM220-5E1/ET100T

8E1 Inverse Multiplexer

FRM220A-8E1/ET100

The FRM220-8E1/ET100 is a slide-in card E1 inverse multiplexer capable of bundling up to 8 E1 lines for cost-effective connection of 10/100BaseTX or 100Base-FX LANs over multiple E1 transports. The FRM220-8E1/ET100 inverse multiplexer transmits up to a 15.87Mbps Ethernet bridge channel (GFP-F encapsulated) over 8 E1 links. The FRM220-8E1/ET100 bridges the gap between E1 and E3, allowing bridges to operate at faster rates. It also provides high speed access to SDH/SONET backbones where the only access services available are E1 lines. The FRM220-8E1/ET100 supports an E1 attenuation of up to 43 dB on twisted pair or coax cable. This provides an approximate operating range up to 2km (using 22AWG). The FRM220-8E1/ET100 fully meets E1 specifications including ITU-T G.703 and G.823. The FRM220-8E1/ET100 features diagnostic capabilities for performing remote loopback. The operator at either end of the line may test both the FRM220-8E1/ET100 and the line in the digital loopback mode. The Ethernet copper interface supports auto-negotiation and auto MDI/MDIX, allowing plug-and-play Ethernet connection without any additional configuration.

Features

- Connects one Fast Ethernet over 8E1 links (1.984Mbps to 15.87Mbps)
- Built-in HDLC bridge operates at WAN rate
- Auto-Negotiation
- Maximum 220ms delay variance between E1 link
- Unbalanced E1/BNC or balanced E1/RJ45
- Fully compatible with FRM220A-CH20 chassis
- SNMP management with FRM220A-CH20 chassis
- LED Alarm indication

Interface	Framing	CCS+CRC
	Standard	ITU-T G.703/G.704/G.706 & G.732, G.823
	Bit rate	2.048Mbps± 50ppm (up to 8E1)
	Line code	HDB3
	Clock setting	Internal OSC or recovery clock
	Receive level	-43dB
	Line impedance	75 ohm (BNC) / 120 ohm (RJ45)
	Jitter Performance	Complies with ITU-T G.823
	Pulse Mask	Complies with ITU-T G.703
	Pulse amplitude	Nominal 2.37V ± 10%
	Delay Variance	220ms
	Connector	BNC / RJ45
	Diagnostics	Digital remote loopback
	Standard	IEEE 802.3, 802.3u
	Data rate	10/100Base-TX, Half/Full duplex
	Connector	RJ45 10/100Base-TX SFP-LC 100Base-FX
Indications		Power, ALM,E1 signal loss , E1 Alarm(AIS，LOF， RAI, LOMF), LAN link /ACT, 10/100M , SD(100Base-FX)
Power Input		AC adapter : 100~240VAC to 12VDC AC 100 ~ 240V, DC -18 ~ 75V
Power Consumption		< 12W
Dimensions		DC12 : 160 x 88 x 24mm (D x W x H) AC/DC48/AD : 201 x 135 x 35mm (D x W x H)
Weight		DC 12 : 280g, AC/DC48/AD : 580g
Temperature		0 ~ 50°C (Operating), -10 ~ 70°C (Storage)
Humidity		10 ~ 90% RH (non-condensing)
Certifications		CE, FCC, RoHS
MTBF		65,000 hrs (25°C)

Managed 8E1 Inverse Multiplexer

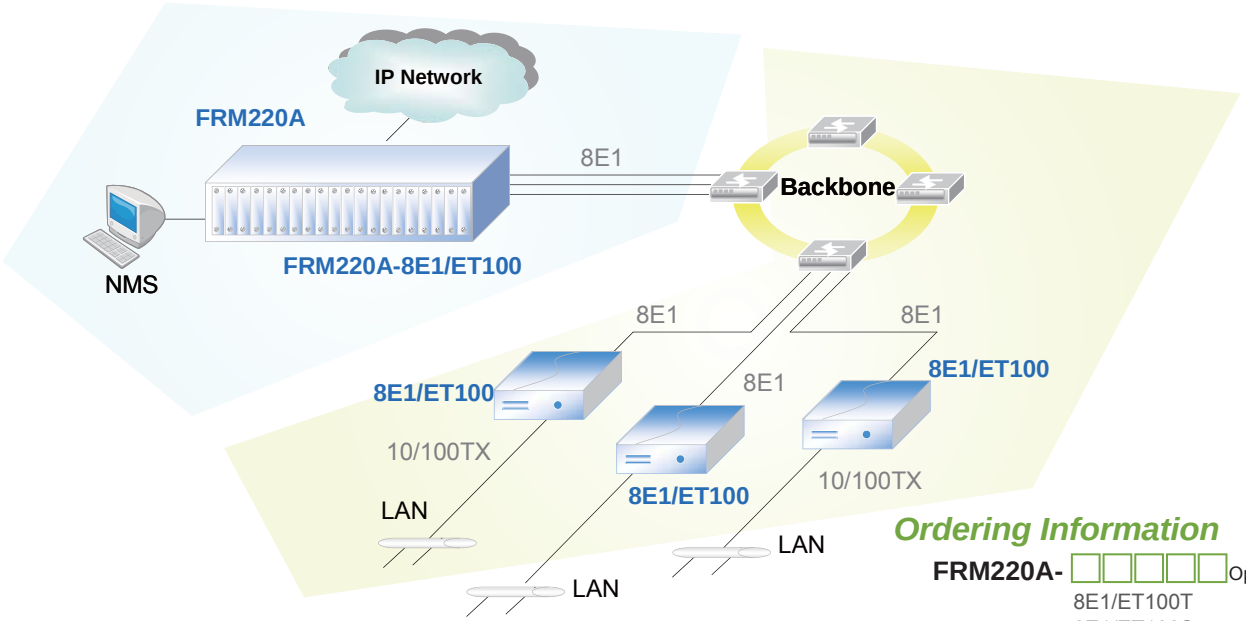

Ordering Information

FRM220A- □□□□□ Optional card

8E1/ET100T

8E1/ET100S

Example: FRM220A-8E1/ET100T

16E1 Inverse Multiplexer

FRM220A-16E1/ET100

The FRM220-16E1/ET100 is a slide-in card E1 inverse multiplexer capable of bundling up to 16 E1 lines for cost-effective connection of 10/100BaseTX or 100Base-FX LANs over multiple E1 transports. The FRM220-16E1/ET100 inverse multiplexer transmits up to a 31.74Mbps Ethernet bridge channel (GFP-F encapsulated) over 16 E1 links. The FRM220-16E1/ET100 bridges the gap between E1 and E3, allowing bridges to operate at faster rates. It also provides high speed access to SDH/SONET backbones where the only access services available are E1 lines. The FRM220-16E1/ET100 supports an E1 attenuation of up to 43 dB on twisted pair or coax cable. This provides an approximate operating range up to 2km (using 22AWG). The FRM220-16E1/ET100 fully meets E1 specifications including ITU-T G.703 and G.823. The FRM220-16E1/ET100 features diagnostic capabilities for performing remote loopback. The operator at either end of the line may test both the FRM220-16E1/ET100 and the line in the digital loopback mode. The Ethernet copper interface supports auto-negotiation and auto MDI/MDIX, allowing plug-and-play Ethernet connection without any additional configuration.configuration.

Features

- Connects one Fast Ethernet over 16E1 links (1.984Mbps to 31.74Mbps)
- Built-in HDLC bridge operates at WAN rate
- Auto-Negotiation
- Maximum 220ms delay variance between E1 link
- Unbalanced E1/BNC or balanced E1/RJ45
- Fully compatible with FRM220A-CH20 chassis
- SNMP management with FRM220A-CH20 chassis
- LED Alarm indication

Interface	Framing	CCS+CRC
	Standard	ITU-T G.703/G.704/G.706 & G.732, G.823
	Bit rate	2.048Mbps± 50ppm (up to 16E1)
	Line code	HDB3
	Clock setting	Internal OSC or recovery clock
	Receive level	-43dB
	Line impedance	75 ohm (BNC) / 120 ohm (RJ45)
	Jitter Performance	Complies with ITU-T G.823
	Pulse Mask	Complies with ITU-T G.703
	Pulse amplitude	Nominal 2.37V ± 10%
	Delay Variance	220ms
	Connector	RJ45, BNC
	Diagnostics	Digital remote loopback
	Standard	IEEE 802.3, 802.3u
	Data rate	10/100Base-TX, Half/Full duplex 100Base-FX
	Connector	RJ45 10/100Base-TX SFP-LC 100Base-FX
Indications		Power, ALM,E1 signal loss , E1 Alarm（AIS，LOF， RAI, LOMF), LAN link /ACT, 10/100M , SD(100Base-FX)
Power Input		AC adapter : 100~240VAC to 12VDC AC 100 ~ 240V, DC -18 ~ 75V
Power Consumption		< 12W
Dimensions		DC12 : 160 x 88 x 24 (D x W x H)mm AC/DC48/AD : 201 x 135 x 35 (D x W x H)mm
Weight		DC 12 : 280g ， AC/DC48/AD : 580g
Temperature		0 ~ 50°C (Operating), -10 ~ 70°C (Storage)
Humidity		10 ~ 90% RH (non-condensing)
Certifications		CE, FCC, RoHS
MTBF		65,000 hrs (25°C)

Managed 16E1 Inverse Multiplexer

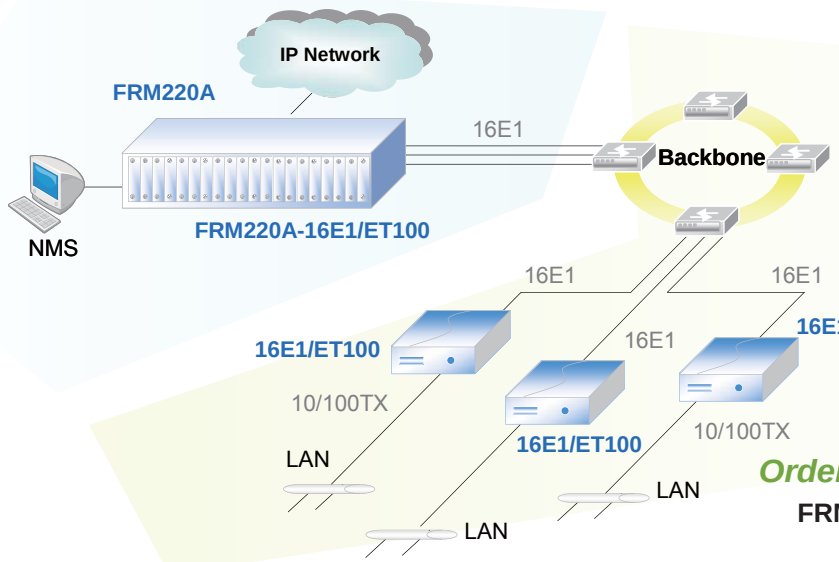

Ordering Information

FRM220A- □□□□□ Optional card

16E1/ET100T
16E1/ET100S

Example: FRM220A-16E1/ET100T

Data to fractional E1

FRM220A-E1/Data

The FRM220-E1/DATA slide in card DSU/CSU is a digital access unit for Unframed or Fractional E1 services. The FRM220-E1/DATA data channel supports user-selectable transmission rates via randomly selected E1 timeslots, which provides integral multiples of 64kbps or 56kbps, up to a maximum 2.048Mbps (unframed), for a line attenuation of up to 43 dB on twisted pair or coax cable. This provides an approximate operating range up to 2km (using 22AWG). The FRM220-E1/DATA front panel provides status LEDs for monitoring the CSU and DSU conditions for initiating local and remote loopback with integral BERT. The FRM220-E1/DATA features a Data cable adapter for connection to industry standard routers. When the FRM220-E1/DATA card is Paced in the FRM220 rack with SNMP management, in-band management allows viewing the card and remote converter's status, type, version, link status, data link status and alarms. Both card and remote can be configured to enable or disable the port, reset the port, set the data rate, modify the clock mode and initiate local or far end loop back test.

Features

- Supports Fractional E1 and Unframed E1 services with V.35/X21/RS530 adapter cable
- I/O connectors all located on front panel
- Multiple clock source selection and remote loopback (Internal or External: E1 recovery, DTE or DCE)
- Built-in BERT with V.54 diagnostic capabilities for performing local
- Unbalanced E1/BNC or balanced E1/RJ45
- Fully compatible with FRM220A-CH20 chassis
- SNMP management with FRM220A-CH20 chassis
- LED Alarm indication

E1 Interface	Framing	Framed/Unframed
	Standard	ITU-T G.703/G.704/G.706 & G.732, G.823
	Bit rate	2.048Mbps± 50ppm
	Line code	HDB3
	Clock setting	Internal OSC or recovery clock
	Receive level	-43dB
	Line impedance	75 ohm (BNC) / 120 ohm (RJ45)
	Jitter Performance	Complies with ITU-T G.823
	Pulse Mask	Complies with ITU-T G.703
	Pulse amplitude	Nominal 2.37V ± 10%
	Delay Variance	8ms
	Connector	BNC / RJ45
	Diagnostics	Digital remote loopback
Ethernet Interface	Standard	ITU-T
	Data rate	Nx56 / Nx64
	Connector	HDB26F w/ adapter cable for Data
LEDs		Power, TD, RD, RTS, DCD, TX Clock loss, Signal loss, Sync loss, Alarm, test error
Power		AC adapter : 100~240VAC to 12VDC AC 100 ~ 240V, DC -18 ~ 75V
Power Consumption		< 12W
Dimensions		DC12 : 160 x 88 x 24mm (D x W x H) AC/DC48/AD : 201 x 135 x 35mm (D x W x H)
Weight		DC 12 : 280g, AC/DC48/AD : 580g
Temperature		0 ~ 50°C (Operating), -10 ~ 70 °C (Storage)
Humidity		10 ~ 90% RH (non-condensing)
Certifications		CE, FCC, RoHS
MTBF		65,000 hrs (25°C)

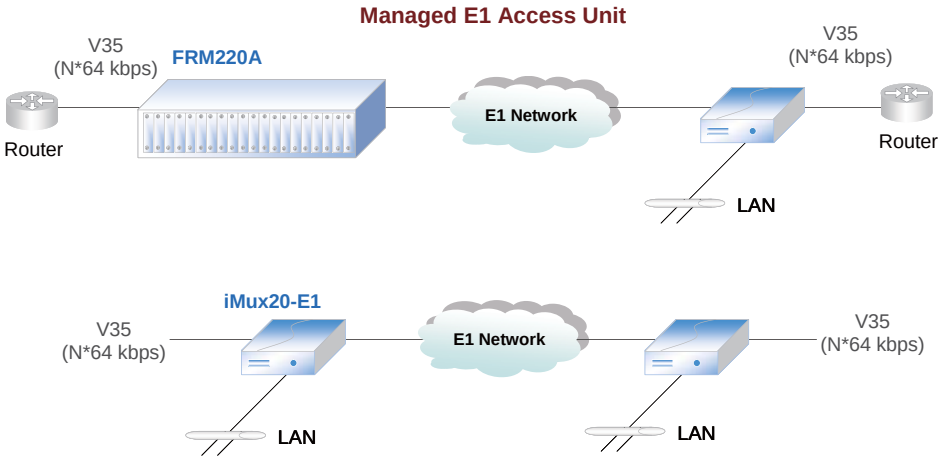

FRM220A-E1/V35 can be inserted in any FRM220A chassis.
For local management, must use either CH01M or CH02M chassis.

Ordering Information

FRM220A- □□□□□ Optional card

E1/Data-R
E1/Data-B

Example: FRM220-E1/Data-R

Managed Gigabit Ethernet Converter

OFC-1000E(S)

The OFC-1000E(s) is a copper to fiber Gigabit Ethernet solution designed to make conversion between 10/100/1000 Base-TX and 1000Base-SX/LX with SC or SFP LC connector. This converter also supports features such as ingress/ egress bandwidth control, auto or forced mode setting for copper Ethernet as well as auto laser shutdown.

Optical Interface	Connector	1x9 (SC) or SFP LC
	Data rate	1000Mbps
	Duplex mode	Full duplex
	Fiber	MM 50/125μm, 62.5/125μm. SM 9/125μm
	Distance	MM 550m, 2km, SM 15/30/50/80/120km WDM 20/40/60km
	Wavelength	MM 1310nm, SM 1310,1550nm WDM 1310Tx/1550Rx (type A) 1550Tx/1310Rx (type B)
Electrical Interface	Connector	RJ45
	Data rate	10Mbps, 100Mbps, 1000Mbps
	Duplex mode	Half / Full duplex
	Cable	10Base-T Cat.3, 4, 5, UTP 100Base-TX Cat.5, 5e or higher 1000Base-T Cat.5, 5e or higher
Standard		IEEE 802.3, IEEE 802.3u, IEEE802.3ab, IEEE802.3z
Indications		LED (Power, FX-Link, FX Duplex, TX-SPD, TX-Duplex, TX-Link)
Power Input		Card : 12VDC Standalone : AC, DC options
Power Consumption		< 5W
Dimension		201 x 135 x 35mm (D x W x H)
Weight		580g
Temperature		0 ~ 50°C (Operating), -10 ~ 70°C (Storage)
Humidity		10 ~ 90% non-condensing
Certification		CE, FCC, LVD, RoHS
MTBF		75,000 hrs (25°C)

Features

- 10/100/1000Base-T to 1000Base-SX/LX SFP
- Auto-negotiation or forced mode
- Auto MDI/MDIX
- Forward 1632 bytes (max.) packets
- Support Bandwidth Control (70k ~ 250Mbps)
- Supports Flow control (Pause)
- Support Link fault pass through (LFP) function
- Supports remote CPE power fail detect (dying gasp)
- Auto Laser Shutdown (ALS)
- Online local f/w upgrade

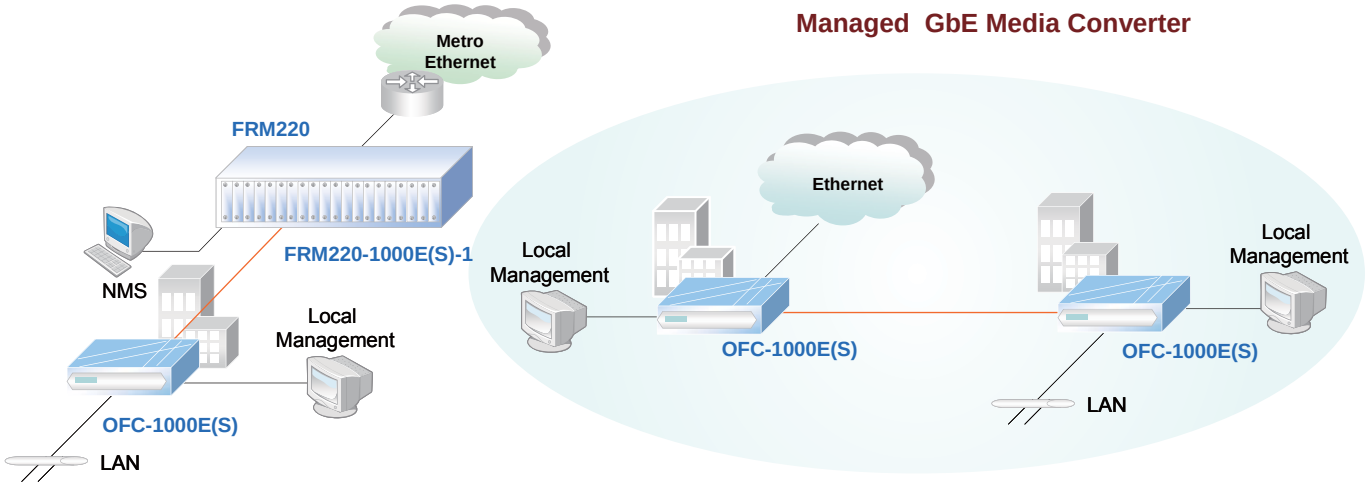

Ordering Information

OFC-□□□□□ Model Type

1000E

1000ES

Example: OFC-1000E

Fast Ethernet In-band Media Converter

OFC-10/100i

The OFC-10/100i is a 10/100Base Ethernet to 100Base-FX stand-alone AC/DC power built-in fiber converter designed for remote applications. With advanced features like bandwidth control, this media converter is targeted for customer premises equipment in metro LAN, campus, enterprise and FTTx applications. By offering in-band management, this converter can be completely controlled and monitored from a centrally located managed FRM220 rack, controlling all converter settings including band-width control, duplex, and speed configuration. This media converter is completely transparent to Layer 2 and Layer 3 protocols including IEEE 802.1q, VLAN tag, Q in Q, STP, IPX, IP, etc.

Features

- 10/100Base-TX to 100Base-FX
- Auto-Negotiation or forced mode
- Auto MDI/MDIX
- Local configuration via DB9 RS-232 port
- Forward 2046 bytes (Max.) packets in switch mode
- Forward 9K jumbo packets in converter mode
- Supports Q in Q double tagged frame transparent
- Supports IEEE 802.1q Tag VLAN pass thru
- Supports local / remote In-band management (Monitor and Configure) by the SNMP manager.
- Bandwidth control (Nx32K or Nx512Kbps)
- Support flow control (Pause)
- Supports remote CPE power fail detect (dying gasp)
- Supports Far End Fault
- Supports Link Fault Pass through (LFP)
- Supports Loop Back Test

Optical Interface	Connector	1x9 (SC, ST, FC)
	Data rate	100Mbps
	Duplex mode	Full duplex
	Fiber	MM 62.2/125μm, 50/125μm. SM 9/125μm
	Distance	MM 2km, SM 15/30/50/80/120km WDM 20/40/60/80km
	Wavelength	310nm, 1550nm
Electrical Interface	Connector	RJ45
	Data rate	10Mbps, 100Mpbs
	Duplex mode	Half / Full duplex
	Cable	10Base-T Cat.3, 4, 5, UTP, 100Base-TX Cat.5, 5e or higher
	Distance	100 meters
Standard		IEEE 802.3, IEEE 802.3u
Indications		LED (Power, FEF, FX-Link, TX-SPD, TX-Duplex, TX-Link)
Power Input		AC 100 ~240V, DC 18 ~72V
Power Consumption		< 4W
Dimensions		201 x 135 x 35mm (D x W x H)
Weight		580g
Temperature		0 ~ 50°C (Operating), -10 ~ 70°C (Storage)
Humidity		10 ~ 95% non-condensing
Certification		CE, FCC, RoHS
MTBF		65,000 hrs (25°C)

Non-managed Fast Ethernet Media Converter

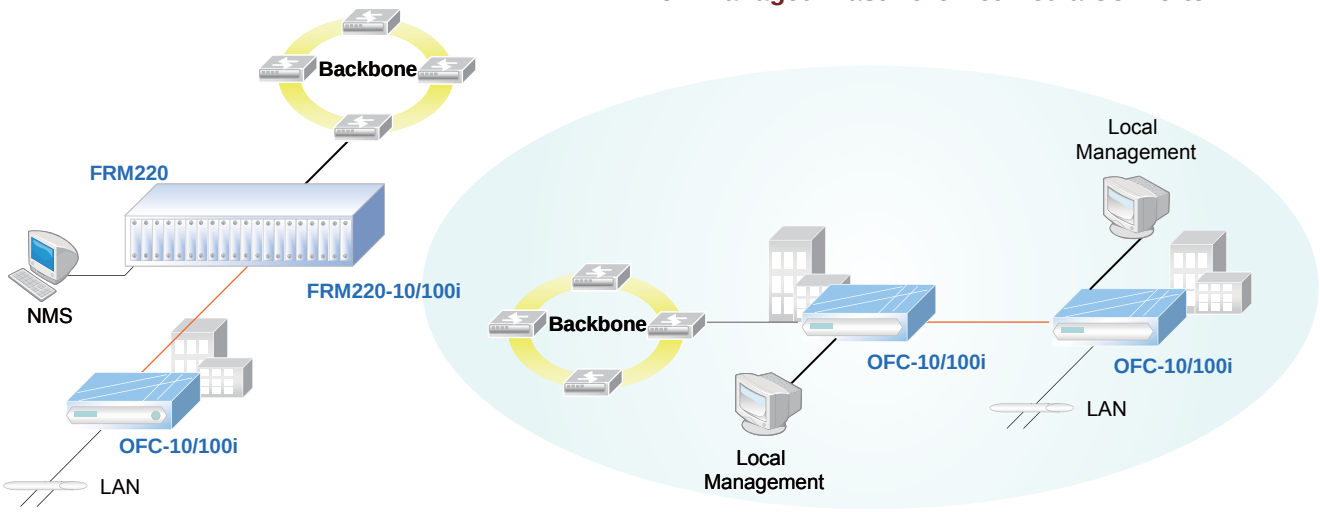

Ordering Information

OFC- □□□□□ Model type

10/100i

Example: OFC-10/100i

Fast Ethernet Non-managed Converter

OFC-10/100

The OFC-10/100 is Fast Ethernet 10/100Base-TX to 100Base-FX non-managed stand-alone fiber media converters, which give you the options to choose from the most popular fiber cabling connectors, ST, SC or FC. Both multi-mode and single mode converter models are available as well as BiDi which allows bi-directional transmissions using only a single fiber cable. When auto-negotiation is selected, these units will automatically tailor themselves to convert both half-duplex and full-duplex signals, according to IEEE802.3u standards. LED indicators signal the power status of the converter, UTP port speed, Link, and duplex status, FX port Link and duplex status.

Optical Interface	Connector	1x9 (SC, ST, FC) or SFP LC
	Data rate	100Mbps
	Duplex mode	Full duplex
	Fiber	MM 50/125μm, 62.5/125μm. SM 9/125μm
	Distance	MM 2km, SM 15/30/50/80/120km, WDM 20/40/60/80km
	Wavelength	MM 1310nm, SM 1310,1550nm WDM 1310Tx/1550Rx (type A) 1550Tx/1310Rx (type B)
Electrical Interface	Connector	RJ45
	Data rate	10Mbps, 100Mbps
	Duplex mode	Half / Full duplex
	Cable	10Base-T Cat.3, 4, 5, UTP, 100Base-TX Cat.5, 5e or higher
Standard	IEEE 802.3, IEEE 802.3u	
Indications	LED (Power, FEF, FX-Link, TX-SPD, TX-Duplex, TX-Link)	
Power Input	Card : 12VDC Standalone : AC, DC options	
Power Consumption	< 4W	
Dimension	201 x 135 x 35mm (D x W x H)	
Weight	580g	
Temperature	0 ~ 50°C (Operating), -10 ~ 70°C (Storage)	
Humidity	10 ~ 90% non-condensing	
Certification	201 x 135 x 35	
MTBF	65,000 hrs (25°C)	

Features

- 10/100Base-TX to 100Base-FX
- Auto-Negotiation or forced mode
- Auto MDI/MDIX
- Forward 2046 bytes (Max.) packets in switch mode
- Forward 9K jumbo packets in converter mode
- Supports Q in Q double tagged frame transparent
- Supports IEEE 802.1q Tag VLAN pass thru
- Support flow control (Pause)
- Supports Far End Fault
- Supports Link Fault Pass through (LFP)

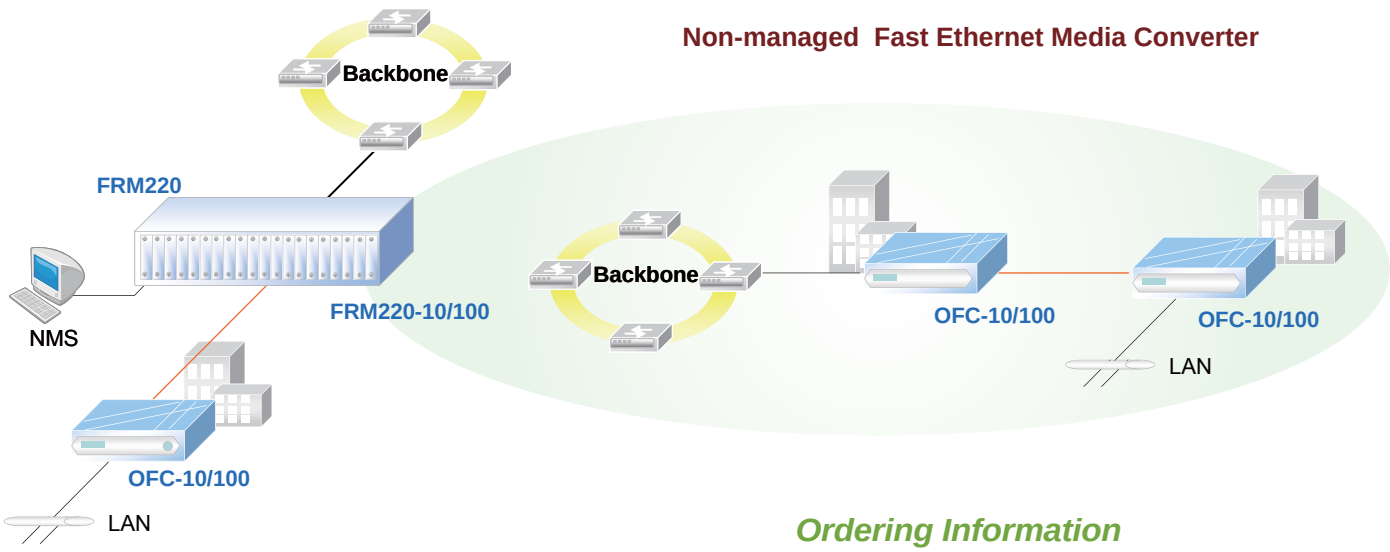

Ordering Information

OFC-□□□□□ Model Type

10/100

Example: OFC-10/100

FRM220 Standalone Media Converter Summary Table

FRM220		Power				Management			
		AC	DC	AD	Adapter	None	Chassis	Standalone	Console
Fast Ethernet	10/100	v	v	v	v	v			
	10/100i	v	v	v	v		v		v
	10/100iS	v	v	v	v		v		v
	10/100iS-2	v	v	v	v		v		
	10/100A	v	v	v	v		v	v	
	10/100AS-2	v	v	v	v		v	v	
Gigabit Ethernet	1000EAS	v	v	v	v		v	v	
	1000EAS-1	v	v	v	v		v	v	
	1000EA-1	v	v	v	v		v	v	
	1000EAS-2F	v	v	v	v		v	v	
	1000EDS	v	v	v	v		v		
	1000ES-1	v	v	v	v		v		
	1000ES-2F	v	v	v	v		v		
	1000E-1	v	v	v	v		v		
	1000E-2F	v	v	v	v		v		
Voice	FXO/FXS	v	v	v	v		v		
Repeater	155MS	v	v	v	v		v		
	155MS-S	v	v	v	v		v		
E1/T1	E1/T1R	v	v	v	v		v		v
	E1/T1R-S	v	v	v	v		v		v
	E1B	v	v	v	v		v		v
	E1B-S	v	v	v	v		v		v
Data	Data	v	v	v	v		v		v
	Data-S	v	v	v	v		v		v
Serial	Serial	v	v	v	v		v		
	Serial-S	v	v	v	v		v		
3R Transponder	2.7G-2S	v	v	v			v		v
	2.7G-3S	v	v	v			v		v
	10G-SS	v	v	v			v		v
	10G-XX	v	v	v			v		v
	10G-SX	v	v	v			v		v
FOM	FOM04	v	v	v			v		
E1 Inverse Multiplexer	E1/ET100T	v	v	v	v		v		
	5E1/ET100T	v	v	v	v		v		
	5E1/ET100S	v	v	v	v		v		
	8E1/ET100T	v	v	v	v		v		
	8E1/ET100S	v	v	v	v		v		
	16E1/ET100T	v	v	v			v		
	16E1/ET100S	v	v	v			v		
E1 Unit	E1/V35-R	v	v	v	v		v		
	E1/V35-B	v	v	v	v		v		

FMC/ OFC Standalone Media Converter Summary Table

FMC / OFC		Power				Management			
		AC	DC	AD	Adapter	None	Chassis	Standaone	Console
Fast Ethernet	10/100	FMC OFC	FMC OFC	OFC	FMC	FMC OFC			
	10/100i	OFC	OFC	OFC	FMC		FMC OFC		OFC
	10/100iS								
	10/100iS-2								
	10/100A	OFC	OFC	OFC			OFC	OFC	
	10/100AS-2								
Gigabit Ethernet	1000EAS								
	1000EAS-1								
	1000EA-1								
	1000EAS-2F								
	1000EDS								
	1000ES	OFC	OFC	OFC	FMC				OFC
	1000ES-2F								
	1000E	OFC	OFC	OFC	FMC				OFC
	1000E-2F								

3U Managed 16-Slot Chassis

FRM301

The FRM301 is a 3U high 19" Rack, 16-slot modular media converter rack. It provides an economic solution in high density fiber converter installations in enterprises or central offices. All critical components, Power, fans, management module and interface cards are hot swappable, allowing online field replacement. The hot-swappable power modules can be chosen from AC100-240V, DC18-36. or DC 36-72V. The chassis also has a pair of alarm relays. A number of cards are available that support different protocols including Ethernet and Data.

- 16-slot media converter chassis
- Single or optional redundant power supplies
- Hot swappable power and cards modules
- 19" Requires only 3RU of rack space
- 19" rack-mountable

Connectors

The front panel features an RS232 (DB9) connector, which will be used to provide connectivity to a rear mounted expansion card in the future.

Physical Specifications

Dimensions: 303mm x 438mm x 88mm (W x D x H)

Weight: 5.2kg w/o P/S

Power Characteristics

AC : 100 ~ 240VAC

DC: 24VDC, 48VDC, 72VDC

Environmental Specifications

Operating 0°C ~ 50°C

Storage -10°C ~ 60°C

Relative humidity 5% ~ 90% non-condensing

Predicted MTBF : 65,000 hrs

Certification

FCC class A, VCCI class A, CE, RoHS

FRM301 front view

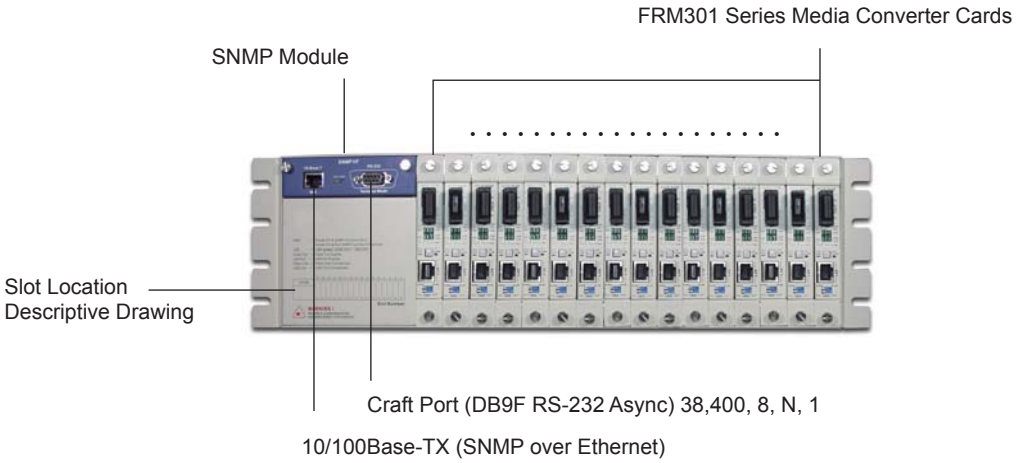

FRM301 back view

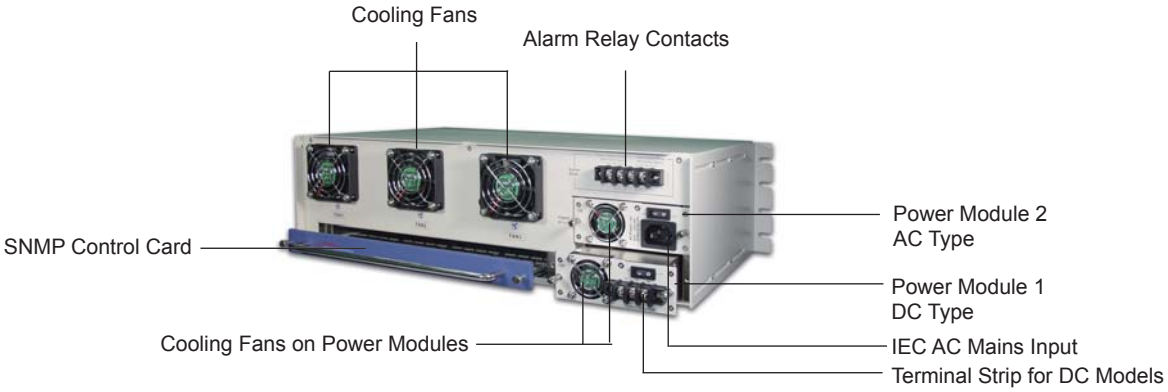

Power Redundancy

All the FRM301 chassis power supplies are hot swappable and modular, installing two into a chassis provides redundancy should a single power supply fail. A fully loaded chassis can run continuously with only one power module fitted into the chassis.

Cooling Fan

To further increase system reliability, the FRM301 chassis modules. Both fan modules can be easily removed from the rear of the chassis, without interruption to the operation of the line cards. A fully loaded chassis can run continuously with only one fan module fitted into the chassis

Network Management

The FRM301 chassis provides an SNNP card which must be installed into the front of chassis. The SNMP card allows a network administrator with the ability to configure and monitor the status of the blades. Management can be achieved locally over RS232, or over the network by Telnet, Web or SNMP, The management module can also monitor the status of a remote blade.

Protocol Supported

The FRM301 chassis has been designed as a Multiserivce platform. This allows network administrators to deploy the chassis in a wide range of network. Technologies supported by the chassis included Fast/Gigabit Ethernet, E1/T1, V35/X21/RS530, Serial RS485/422, Repeater.

Ordering Information

FRM301- □□□□□ Chassis type

CH	: 3U 19” 16 slot chassis
AC	: 100 ~ 240V AC power card
DC24	: 18 ~ 36V DC power card
DC48	: 36 ~ 72V DC power card
SNMP	: Network Management Card

Example: FRM301-CH

10/100/1000Base-T to 1000Base-X SFP media coverter

FIB1-1000ES
FRM301-1000ES

The FRM301-1000ES and FIB1-1000ES are Gigabit Ethernet 10/100/1000Base-T to 1000Base-SX/LX SFP. They are managed (when installed in FRM301 with management) or non-managed stand-alone media converters, which give you the options to choose from a wide range of industry standard SFP modules with LC connectors. SFPs in multi-mode and single mode models are available as well as BiDi which allows bi-directional transmissions using only a single fiber cable. When auto-negotiation is selected, these units will automatically tailor themselves to convert both half-duplex and full-duplex signals, depending on your specific network needs. LED indicators signal the power status of the converter, UTP port speed, Link, and duplex status, FX port Link and duplex status.

Optical Interface	Connector	1x9 (SC) or SFP LC
	Data rate	1000Mbps
	Duplex mode	Full duplex
	Fiber	MM 50/125μm, 62.5/125μm. SM 9/125μm
	Distance	MM 550m, 2km, SM 15/30/50/80/120km WDM 20/40/60km
	Wavelength	MM 1310nm, SM 1310,1550nm WDM 1310Tx/1550Rx (type A) 1550Tx/1310Rx (type B)
Electrical Interface	Connector	RJ45
	Data rate	10Mbps, 100Mbps, 1000Mbps
	Duplex mode	Half / Full duplex
	Cable	10Base-T Cat.3, 4, 5, UTP 100Base-TX Cat.5, 5e or higher 1000Base-T Cat.5, 5e or higher
Standard		IEEE 802.3, IEEE 802.3u, IEEE802.3ab, IEEE802.3z
Indications		LED (Power, FX-Link, TX-Link, TX-SPD, TX-Duplex, LLF)
Power Input		Card : 12VDC Standalone : AC, DC options
Power Consumption		< 5W
Dimension		123 x 86 x 20mm (D x W x H)
Weight		FRM301: 290g, FIB1:340g
Temperature		0 ~ 50°C (Operating), -10 ~ 70°C (Storage)
Humidity		10 ~ 90% non-condensing
Certification		CE, FCC, LVD, RoHS
MTBF		65,000 hrs (25°C)

Features

- 10/100/1000Base-T to 1000Base-SX/LX SFP
- Network management via terminal, or SNMP in FRM301 chassis
- Auto-negotiation or forced mode
- Auto MDI/MDIX
- Forward 1632 bytes (Max.) packets
- Supports Flow control (Pause)
- Support Link Fault Pass through (LFP) function
- Auto Laser Shutdown (ALS)

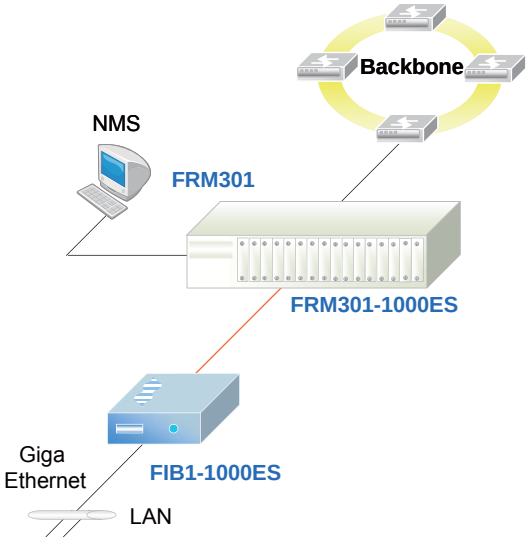

Gigabit Ethernet Media Converter

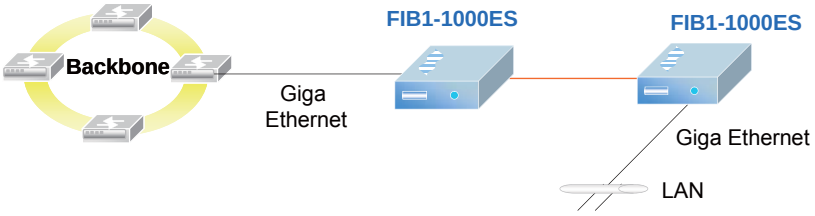

Ordering Information

FRM301- □□□□□
FIB1- □□□□□ Model type
1000ES

Example: FRM301-1000ES

1000Base-T to 1000Base-X SFP media converter

FIB1-1000TS, 1000TG
FIB2-1000TG
FRM301-1000TS, 1000TG

The FRM301-1000TS and 1000TG are transparent Gigabit Ethernet 1000Base-T to 1000Base-SX/LX SFP or GBIC. They are managed (when installed in FRM301 with management) or non-managed stand-alone media converters, which give you the options to choose from a wide range of industry standard SFP modules with LC connectors. SFPs in multi-mode and single mode models are available as well as BiDi which allows bi-directional transmissions using only a single fiber cable. Because they are completely transparent to Ethernet packets, they are able to support any size frames, including undersized or jumbo packets (9K bytes). LED indicators signal the power status of the converter, UTP port speed, Link, and duplex status, FX port Link and duplex status.

Features

- 1000Base-T to 1000Base-SX/LX
- Network management via terminal or SNMP in FRM301 chassis
- Auto-negotiation or forced mode
- Auto MDI/MDIX
- Forward 9k bytes (Max.) packets
- Support Link Fault Pass through (LFP) function
- Auto Laser Shutdown (ALS)

Optical Interface	Connector	SFP-LC, GBIC-SC
	Data rate	1000Mbps
	Duplex mode	Full duplex
	Fiber	MM 50/125μm, 62.5/125μm. SM 9/125μm
	Distance	MM 550m, 2km, SM 15/30/50/80/120km WDM 20/40/60km
	Wavelength	MM 1310nm, SM 1310,1550nm WDM 1310Tx/1550Rx (type A) 1550Tx/1310Rx (type B)
Electrical Interface	Connector	RJ45
	Data rate	10Mbps, 100Mbps, 1000Mbps
	Duplex mode	Half / Full duplex
	Cable	10Base-T Cat.3, 4, 5, UTP 100Base-TX Cat.5, 5e or higher 1000Base-T Cat.5, 5e or higher
Standard		IEEE 802.3ab, IEEE 802.3z
Indications		LED (Power, FX Link, FX Duplex, TX SPD, TX Link, TX Duplex)
Power Input		Card : 12VDC Standalone : AC, DC options
Power Consumption		< 5W
Dimension		FRM301/FIB1: 123 x 86 x 20mm (D x W x H) FIB2: 192 x 86 x 30mm (D x W x H)
Weight		FRM301: 290g, FIB1:340g, FIB2: 550g
Temperature		0 ~ 50°C (Operating), -10 ~ 70°C (Storage)
Humidity		10 ~ 90% non-condensing
Certification		CE, FCC, RoHS
MTBF		65,000 hrs (25°C)

FIB2-1000TG

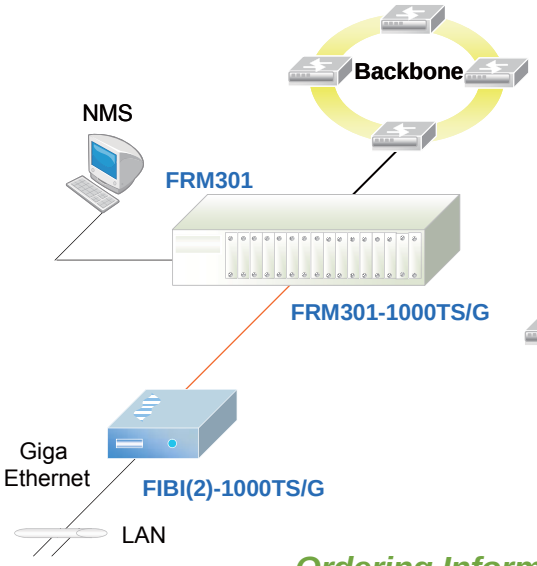

Gigabit Ethernet Media Converter

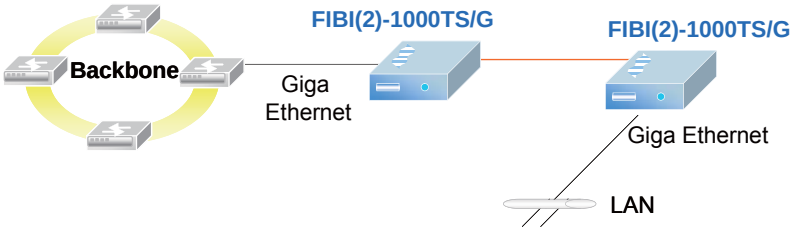

Ordering Information

FRM301- ☐☐☐☐☐
FIB1- ☐☐☐☐☐ Model type
1000TS
1000TG
Example: FRM301-1000TS

FIB2- ☐☐☐☐☐ Model type
1000TG
Example: FRM301-1000TG

1000Base-SX to 1000Base-X GBIC media converter

FIB1-1000MG
FRM301-1000MG

The FRM301-1000MG and FIB1-1000MG are transparent multi-mode fiber to GBIC fiber converters at speeds up to 1.25Gbps. They are managed (when installed in FRM301 with management) or non-managed stand-alone media converters, which give you the options to choose from a wide range of industry standard GBIC modules with SC connectors. With one fixed multi-mode transceiver on board, these converters are best deployed in multi-mode to single mode fiber applications. LED indicators signal the power status of the converter, UTP port speed, Link, and duplex status, FX port Link and duplex status.

Optical Interface	Connector	1x9 (SC) or SFP LC
	Data rate	1000Mbps
	Duplex mode	Full duplex
	Fiber	MM 50/125μm, 62.5/125μm. SM 9/125μm
	Distance	MM 550m, 2km, SM 15/30/50/80/120km WDM 20/40/60km
	Wavelength	MM 1310nm, SM 1310,1550nm WDM 1310Tx/1550Rx (type A) 1550Tx/1310Rx (type B)
Indications		LED (Power, MM-Link, SM-Link)
Power Input		Card : 12VDC Standalone : AC, DC options
Power Consumption		< 5W
Dimension		123 x 86 x 20mm (D x W x H)
Weight		FRM301: 290g, FIB1:340g
Temperature		0 ~ 50°C (Operating), -10 ~ 70°C (Storage)
Humidity		10 ~ 90% non-condensing
Certification		CE, FCC, LVD, RoHS
MTBF		65,000 hrs (25°C)

Features

- Transparent fiber media converter / repeater
- Data rate to 1.25G
- Network management via terminal or SNMP in FRM301 chassis
- Extend transmission from 2km to 120km over fiber
- Perform optical repeater function (Re-amplification & Reshaping)

MM to SM Fiber Repeater

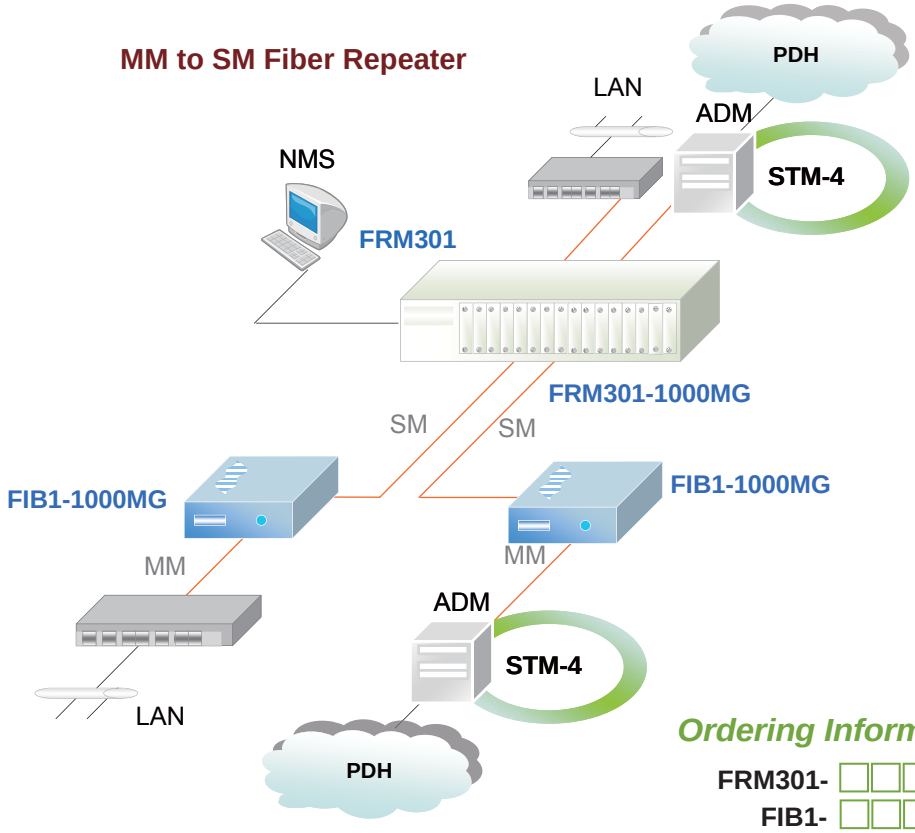

Ordering Information

FRM301- □□□□□

FIB1- □□□□□ Model type

1000MG

Example: FRM301-1000MG

1000Base-X to 1000Base-X SFP media converter

FIB1-1000DS
FRM301-1000DS

The FRM301-1000DS is a fiber to fiber optical media converter and repeater that allows data rates up to 2.5Gbps. FRM301-1000DS supports 2R regeneration, which consists of re-amplification and reshaping. This converter is compatible with fiber interfaces such as 100Mbps Fast Ethernet, 155Mbps STM1, 4, 16, Fiber Channel 1, 2, and OC3, 12, 24, 48. The FRM301-1000DS works as an FRM301 slide-in card, while the FIB1-1000DS is a stand-alone fiber converter. When the FRM301-1000DS card is placed in the FRM301 rack with SNMP management, the management can view the converter card's status, type and fiber link status.

Features

- Transparent fiber media converter / repeater
- Data rate up to 2.5G
- Network management via terminal or SNMP in FRM301 chassis
- Extend transmission from 2km to 120km over fiber
- Perform optical repeater function (Re-amplification & Reshaping)

Optical Interface	Connector	SFP LC x 2
	Data rate	Up to 2.5G
	Duplex mode	Full duplex
	Fiber	MM 50/125μm, 62.5/125μm. SM 9/125μm
	Distance	MM 550m, 2km, SM 15/30/50/80/120km WDM 20/40/60km
	Wavelength	MM 1310nm, SM 1310,1550nm WDM 1310Tx/1550Rx (type A) 1550Tx/1310Rx (type B)
Indications		LED (Power, FX-Link1, FX-Link2)
Power Input		Card : 12VDC Standalone : AC, DC options (please refer to page xx for details)
Power Consumption		< 5W
Dimension		123 x 86 x 20mm (D x W x H)
Weight		FRM301: 290g, FIB1:340g
Temperature		0 ~ 50°C (Operating), -10 ~ 70°C (Storage)
Humidity		10 ~ 90% non-condensing
Certification		CE, FCC, LVD, RoHS
MTBF		65,000 hrs (25°C)

Optical Line Repeater with SFP slot

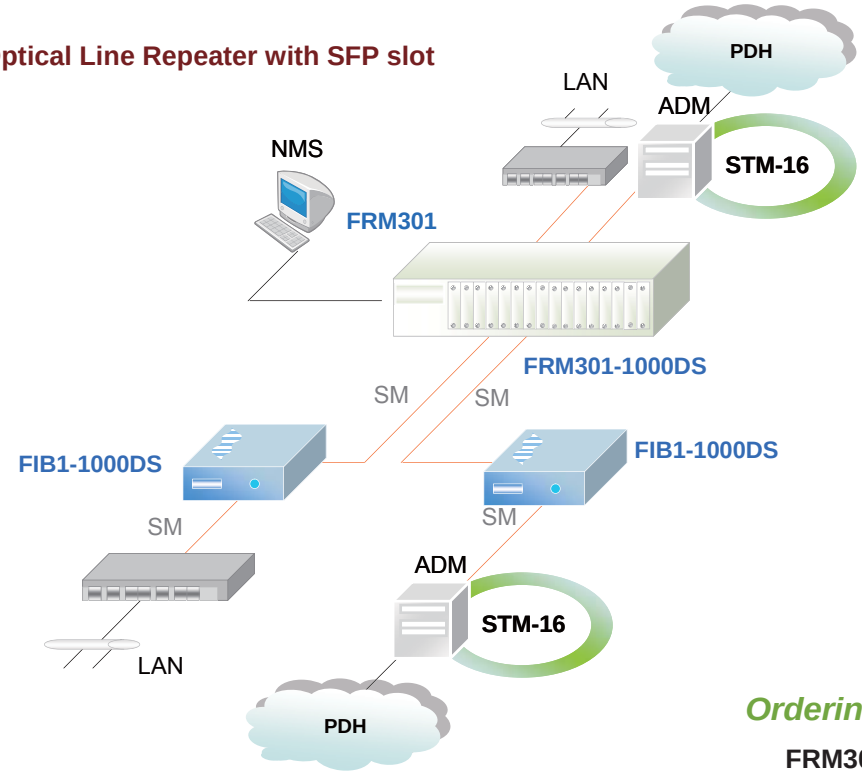

Ordering Information

FRM301- □□□□□
FIB1- □□□□□ Model type
1000DS

Example: FRM301-1000DS

10/100Base-TX to 100Base-FX media converter

FIB1-10/100F, FIB2-10/100F FRM301-10/100F

The FRM301-10/100F, FIB1-10/100F, FIB2-10/100F are Fast Ethernet 10/100Base-TX to 100Base-FX manageable (when installed in FRM301 with management) or stand-alone media converters, which give you the options to choose from the most popular fiber cabling connectors, ST, SC, or FC. Both multi-mode and single mode converter models are available as well as BiDi which allows bi-directional transmissions using only a single fiber cable. When auto-negotiation is selected, these units will automatically tailor themselves to convert both half-duplex and full-duplex signals, depending on your specific network needs. LED indicators signal the power status of the converter, UTP port speed, Link, and duplex status, FX port Link and duplex status.

Features

- 10/100Base-TX to 100Base-FX Converter
- Auto-Negotiation or forced mode
- Auto MDI/MDIX
- Forward 1600 bytes (Max.) packets
- Supports Q in Q double tagged frame transparent
- Supports IEEE 802.1q Tag VLAN pass thru
- Supports local monitor and configure by the SNMP manager.
- Support flow control (Pause)
- Supports Link Fault Pass through (LFP)
- Supports Loop Back Test
- Auto Laser Shutdown (ALS)

Optical Interface	Connector	1x9 (SC, ST, FC) or SFP LC
	Data rate	100Mbps
	Duplex mode	Full duplex
	Fiber	MM 50/125μm, 62.5/125μm. SM 9/125μm
	Distance	MM 2km, SM 15/30/50/80/120km, WDM 20/40/60/80km
	Wavelength	MM 1310nm, SM 1310,1550nm WDM 1310Tx/1550Rx (type A) 1550Tx/1310Rx (type B)
Electrical Interface	Connector	RJ45
	Data rate	10Mbps, 100Mbps
	Duplex mode	Half / Full duplex
	Cable	10Base-T Cat.3, 4, 5, UTP, 100Base-TX Cat.5, 5e or higher
Standard		IEEE 802.3, IEEE 802.3u
Indications		LED (Power, FX Link, FX Duplex, TX SPD, TX Link, TX Duplex)
Power Input		Card : 12VDC Standalone : AC, DC options
Power Consumption		< 4W
Dimension		FRM301/FIB1: 123 x 86 x 20mm (D x W x H) FIB2: 192 x 86 x 30mm (D x W x H)
Weight		FRM301: 290g, FIB1: 340g, FIB2: 550g
Temperature		0 ~ 50°C (Operating), -10 ~ 70°C (Storage)
Humidity		10 ~ 90% non-condensing
Certification		CE, FCC, RoHS
MTBF		65,000 hrs (25°C)

FIB2-10/100F

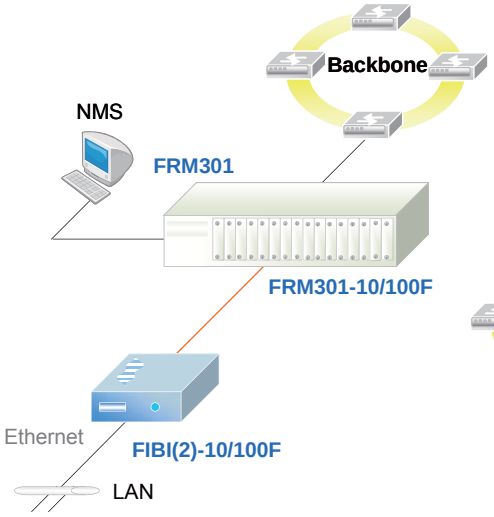

Fast Ethernet Media Converter

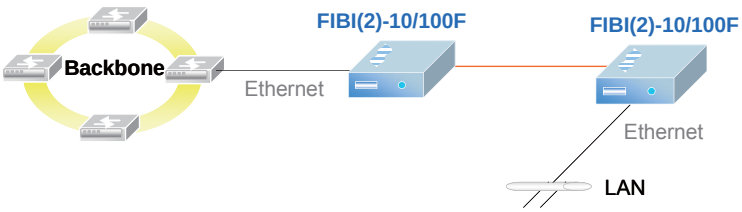

Ordering Information

FRM301- □□□□□
FIB1- □□□□□
FIB2- □□□□□ Model type
10/100F

Example: FRM301-10/100F

E1/T1 Fiber modem

FIB1-E1/T1, FIB2-E1/T1 FRM301-E1/T1

The FRM301-E1/T1 is a fiber media transport for G.703 E1/T1 transmissions. The BNC model provides unbalanced 75 Ohm coaxial E1 connections while two RJ-45 models provide either balanced 120 Ohm E1 or 100 Ohm T1 connections over twisted pair wiring. When the FRM301-E1/T1 card is placed in the FRM301 rack with management, the card status, type, version, fiber link status, E1 or T1 link status and alarms for both local card and remote unit can all be displayed. Configuration is also available to enable or disable the port, reset the port, do far end fault setting, and initiate local or far end loop-back tests. When set for E1 mode, the FRM3010-E1/T1 also supports unframed (unstructured) E1 when connected to a remote FRM301-Data, synchronous data communications converter at 2048Kbps.

Optical Interface	Connector	1x9 (SC, ST, FC)
	Data rate	100Mbps
	Duplex mode	Full duplex
	Fiber	MM 50/125μm, 62.5/125μm. SM 9/125μm
	Distance	MM 2km, SM 15/30/50/80/120km, WDM 20/40/60/80km
	Wavelength	MM 1310nm, SM 1310,1550nm WDM 1310Tx/1550Rx (type A) 1550Tx/1310Rx (type B)
Electrical Interface	Connector	RJ45 E1-120Ω, T1-100 Ω, BNC E1-75 Ω
	Data rate	10Mbps, 100Mbps
	Duplex mode	Half / Full duplex
	Cable	Cat.3 or higher Twisted-Pair cable 100 meters
Standard		E1 ITU-T G.703, G.704, G.706, G.732, G.823 T1 ITU-T G.703, G.704, AT&T, TR-62411, ANSI T1.403
Indications		LED (Power, FX Link, FX Duplex, TX SPD, TX Link, TX Duplex)
Power Input		Card : 12VDC Standalone : AC, DC options
Power Consumption		< 5W
Dimension		FRM301/FIB1: 123 x 86 x 20mm (D x W x H) FIB2: 192 x 86 x 30mm (D x W x H)
Weight		FRM301: 290g, FIB1:340g, FIB2: 550g
Temperature		0 ~ 50°C (Operating), -10 ~ 70°C (Storage)
Humidity		10 ~ 90% non-condensing
Certification		CE, FCC, LVD, RoHS
MTBF		65,000 hrs (25°C)

Features

- In-band managed via terminal, GUI or SNMP in FRM301-CH chassis
- T1/E1 RJ-45 (USOC RJ-48C) or E1 Coax (BNC) to Fiber converter
- Supports AMI or B8ZS/HDB3 line codes
- E1 supports unframed to FRM301-Data
- User selectable line code setting
- Electrical and optical loop back tests

FIB2-E1/T1

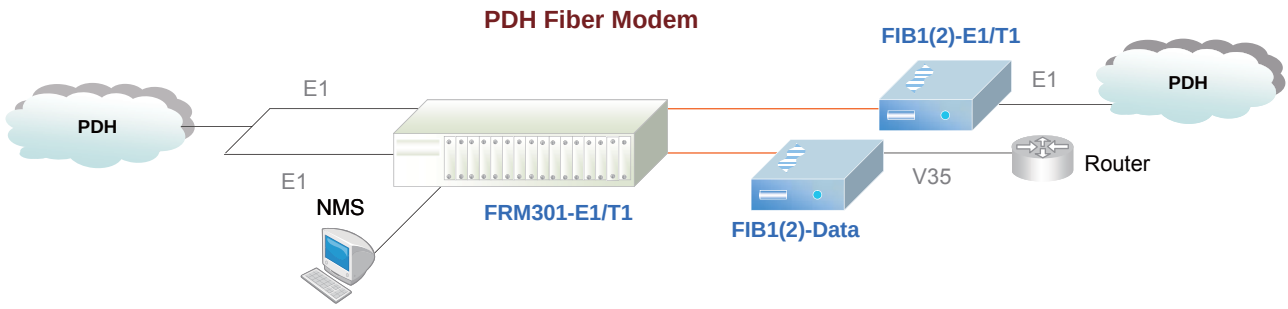

Ordering Information

FRM301- □□□□□
FIB1- □□□□□
FIB2- □□□□□ Model type
E1/T1

Example: FRM301-E1/T1

V35/X21/RS530/449/232 Fiber modem

FRM301-Data
FIB1-Data
FIB2-Data

The FRM301-DATA and DATA/H are media converters for Nx64K up to 2.048Mbps or high-speed (up to 8.192Mbps for "H" model) synchronous or low speed synchronous and asynchronous data transmissions (V.35, RS-232, RS-530, X.21 or RS-449) over fiber optical media. When the FRM301-DATA card is placed in the FRM301 rack with SNMP management, in-band management allows viewing the card and remote converter's status, type, version, fiber link status, data link status and alarms. Both card and remote can be configured to enable or disable the port, reset the port, set the data rate, modify the clock mode, and initiate local or far end loop back tests. The FRM301-Data converter may also be paired with the FRM301-E1 for 2048K transmissions.

Features

- Synchronous or Asynchronous data over fiber
- In-band management via terminal, GUI or SNMP in FRM301-CH chassis
- Supports interface: V.35, X.21, RS530, RS449, RS232 DCE mode
- User selectable data rate Nx64kbps, up to 2Mbps (9Mbps for Data/H)
- Clock mode setting, internal, external, or recovery
- Electrical and optical loop back tests
- Compatible with FRM301-E1 on same fiber link for 2Mbps unframed

FIB2-Data

Optical Interface	Connector	1x9 (SC, ST, FC)
	Data rate	36.864Mbps
	Line coding	Scrambled NRZ
	Bit Error Rate	Less than 10^{-10}
	Fiber	SM 9/125μm
	Distance	MM 2km, SM 15/30/50/80/120km, WDM 20/40/60/80km
	Wavelength	MM 1310nm, SM 1310,1550nm WDM 1310Tx/1550Rx (type A) 1550Tx/1310Rx (type B)
Electrical Interface	Connector	HDB26F w/ adapter cable for V35, X21, RS530, RS449,RS232
	Line Code	NRZ
	Baud Rate	N*64Kbps , where n=1 to 32 (64K ~ 2048kbps) Low speed, Sync or Async, 75 to 115.2kbps
	Clock mode	Transparent, Recovery, External, Internal RC, TC, ETC normal or inverted
Standard	ITU-T	
Indications	LED (Power, FX Link, TD, RD, RTS,CTS, DCD, Test)	
Power Input	Card : 12VDC Standalone : AC, DC options	
Power Consumption	< 5W	
Dimension	FRM301/FIB1: 123 x 86 x 20mm (D x W x H) FIB2: 192 x 86 x 30mm (D x W x H)	
Weight	FRM301: 290g, FIB1: 340g, FIB2: 550g	
Temperature	0 ~ 50°C (Operating), -10 ~ 70°C (Storage)	
Humidity	10 ~ 90% non-condensing	
Certification	CE, FCC, RoHS	
MTBF	65,000 hrs (25°C)	

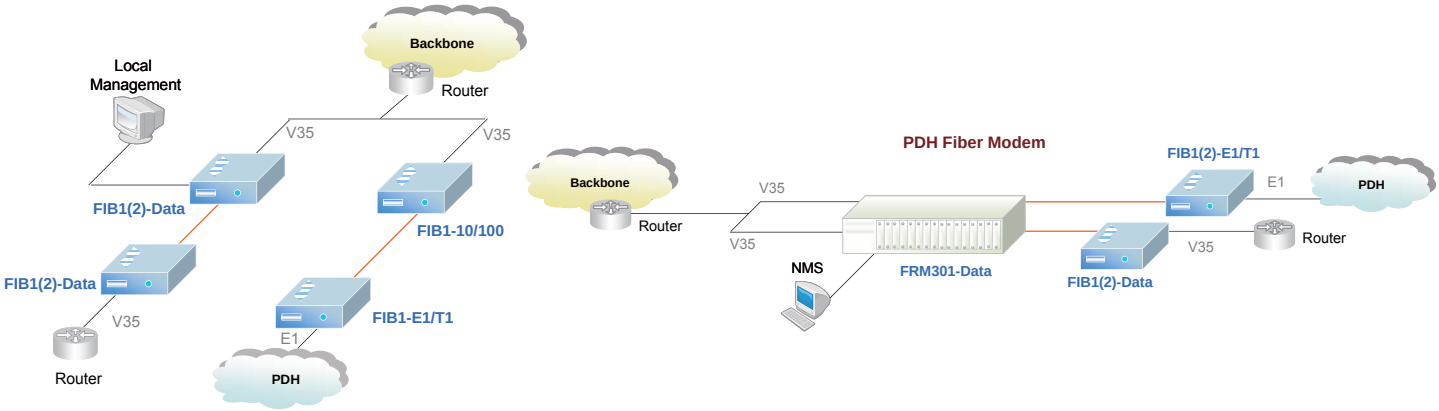

Ordering Information

FRM301- □□□□□
FIB1- □□□□□
FIB2- □□□□□ Model type
DATA

Example: FRM301-DATA

E1/T1 Fiber modem

FRM301-Serial
FIB1-Serial
FIB2-Serial

The FRM301-Serial provides a fiber converter solution to extend asynchronous RS-485 or RS-232 transmission distance up to 2km over multimode fiber or up to 120km over single mode fiber. The converter is equipped with multiple interface circuits for connection to RS-232 or RS-485/422 (2 or 4 wire, full or half duplex). The FRM301-Serial secures data transmission over EMI resistant fiber at speeds up to 256kbps for RS-232 or up to 1024kbps for RS-485/422. When the FRM301-Serial card is placed in the FRM301 rack with SNMP management, in-band management allows viewing the card and remote converter's status, type, version, fiber link status, data link status and alarms. Both card and remote can be configured to enable or disable the port and set the interface type.

Optical Interface	Connector	1x9 (SC, ST, FC)
	Data rate	36.864Mbps
	Line coding	Scrambled NRZ
	Bit Error Rate	Less than 10^{-10}
	Fiber	SM 9/125μm
		MM 2km, SM 15/30/50/80/120km,
	Distance	MM 2km, SM 15/30/50/80/120km,
		WDM 20/40/60/80km
	Wavelength	WDM 1310Tx/1550Rx (type A)
		1550Tx/1310Rx (type B)
Electrical Interface	Connector	6 pins Terminal block
	Data	Signal Formats
		RS485/422 2-wire, 4-wire
		RS232 RTS/CTS 5-wire, 3-wire
	Baud Rate	RS422, RS485 up to 1024kbps
		RS232 up to 256kbps
		inverted
Standard	EIA/TIA RS485, RS422, RS232	
Indications	LED (Power, DI, FX Link, Test)	
Power Input	Card : 12VDC	
	Standalone : AC, DC options	
Power Consumption	< 5W	
Dimension	FRM301/FIB1: 123 x 86 x 20mm (D x W x H)	
	FIB2: 192 x 86 x 30mm (D x W x H)	
Weight	FRM301: 290g, FIB1: 340g, FIB2: 550g	
Temperature	0 ~ 50°C (Operating), -10 ~ 70°C (Storage)	
Humidity	10 ~ 90% non-condensing	
Certification	CE, FCC, RoHS	
MTBF	65,000 hrs (25°C)	

Features

- Extends asynchronous serial transmission from 2km to 120km over fiber
- In-band management via terminal, GUI or SNMP in FRM301-CH chassis
- Software selectable data interface for RS232/ 422/ 485
- Software selectable two wires (half duplex) or four wires (full duplex) RS485
- Software selectable three or five wires RS232
- Speeds up to 256kbps for RS232 (Async. mode)
- Speeds up to 1Mbps for RS485/422

FIB2-Serial

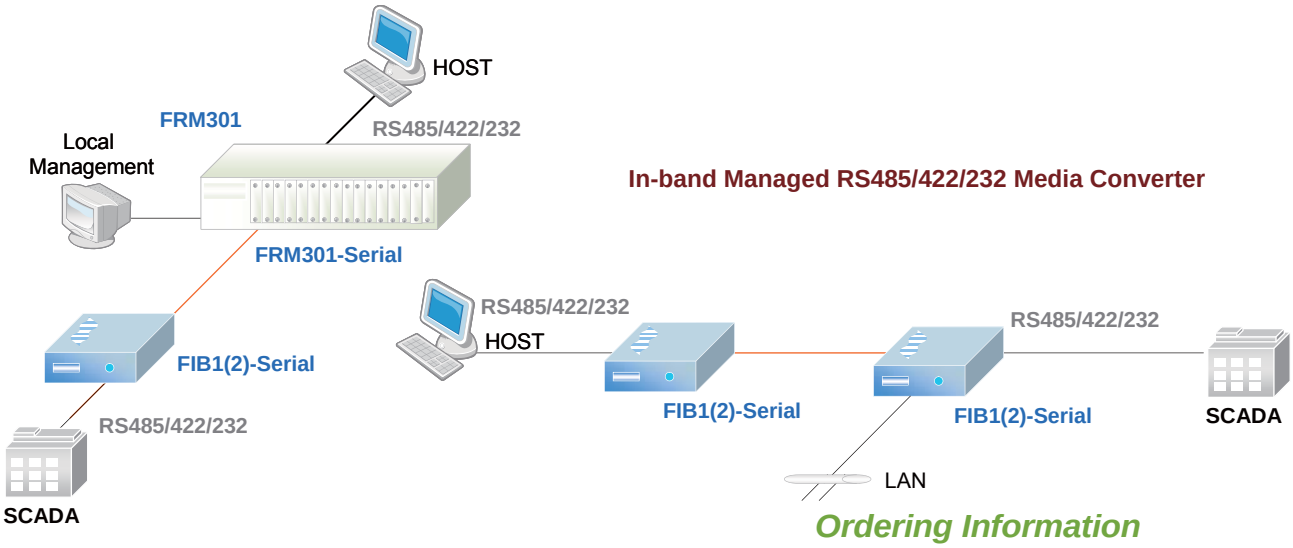

In-band Managed RS485/422/232 Media Converter

Ordering Information

FRM301- □□□□□
FIB1- □□□□□
FIB2- □□□□□ Model type
Serial

Example: FRM301-Serial

4U Managed 12 Slot Chassis

FRM401

The FRM401 is a 4U, 19(23)" fiber media platform rack that features 12 cards capacity and supports a four channel (four in one) Ethernet copper to fiber converter card for 10/100Base-TX to 100Base-FX multimode fiber (up to 2 km), single mode fiber (up to 120 km) or utilizing WDM (up to 60 km). WDM (Wave Division Multiplexing) converts each input-output data stream into separate wavelengths of light and transmits/receives these channels through the same optical fiber. The FRM401-SNMP management option provides a serial console, Telnet or SNMP management to configure each channel on the line cards and monitor chassis power, fan and card status.

- 4U 19 (23)"chassis, 12 slots for cards
- Rack with dual power modules designed for AC or DC power sharing, plus cooling fans
- All modules and cards support hot-swapping
- All electrical signals connect from rear, optical from
- front

Ports	SNMP Card : Console RS232, LAN 10/100Base-TX RJ45
LEDs	SNMP Card : Power, Link, SNMP
Power	AC110 : 85 ~138V, AC220: 187 ~276V DC48: 42 ~ 60V, DC72: 36 ~72V
Power Consumption	150W
Dimensions	285 x 440 x 180mm (D x W x H)
Weight	7.9 kg
Temperature	0~50°C (Operating) ,0~70°C (Storage)
Humidity	10~90% non-condensing
Certification	CE, FCC, RoHS
MTBF	65,000 h (25°C)

FRM401 Front view

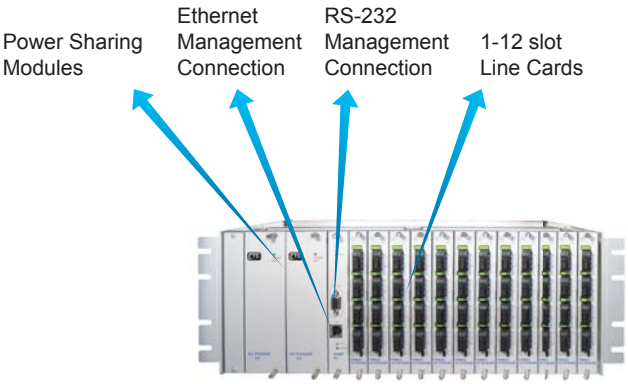

FRM401 Back view

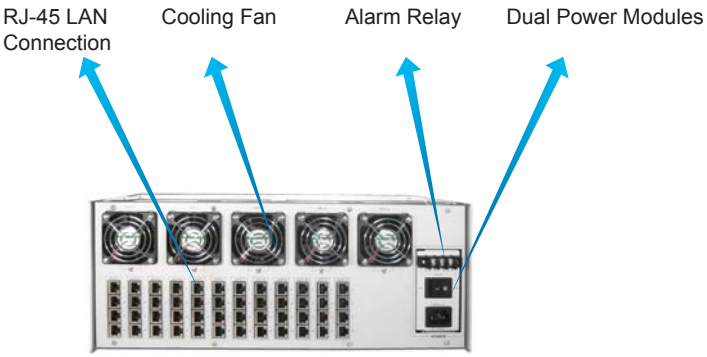

Cooling Fan

To further increase system reliability, the FRM401 chassis modules. Both fan modules can be easily removed from the rear of the chassis, without interruption to the operation of the line cards. A fully loaded chassis can run continuously with only one fan module fitted into the chassis

Network Management

The FRM401 chassis provides an SNNP card which must be installed into the front of chassis. The SNMP card allows a network administrator with the ability to configure and monitor the status of the blades. Management can be achieved locally over RS232, or over the network by Telnet, Web or SNMP, The management module can also monitor the status of a remote blade.

Protocol Supported

The FRM401 chassis has been designed as a Multiserivce platform. This allows network administrators to deploy the chassis in a wide range of network. Technologies supported Fast Ethernet.

Ordering Information

FRM401- □□□□□ Chassis type

CH/AC : 4U 19" 12-slot chassis for AC power
CH/DC : 4U 19" 12-slot chassis for DC power
AC-110 : 85 ~ 138 AC power card
AC-220 : 187~ 276 AC power card
DC : 42 ~ 60 DC power card

Example: FRM401-CH-AC

FRM401- □□□□□ Optional card

SNMP : SNMP Card
10/100 : 4-port 10/100TX to 100FX card

Example: FRM401-10/100

Fast Ethernet Bridge Tributary Card

FRM401-10/100

The FRM401-10/100 is a four channel Fast Ethernet 10/100Base-TX to 100Base-FX manageable media converter card, which gives you the options to choose from the most popular fiber cabling connectors, ST, SC, or FC. Both multi-mode and single mode converter cards are available as well as BiDi which allows bi-directional transmissions using only a single fiber cable. When auto-negotiation is selected, the Ethernet ports will automatically tailor themselves to convert both half-duplex and full-duplex signals, depending on your specific network needs. LED indicators signal the power status of the card, UTP port speed, Link, and duplex status, FX port Link and duplex status.

Features

- 4Ch 10/100Base-TX to 100Base-FX Converter
- Auto-Negotiation or forced mode
- Auto MDI/MDIX
- Forward 1600 bytes (Max.) packets
- Supports Q in Q double tagged frame transparent
- Supports IEEE 802.1q Tag VLAN pass thru
- Supports local monitor and configure by the SNMP manager.
- Support flow control (Pause)
- Supports Link Fault Pass through (LFP)
- Supports Loop Back Test
- Auto Laser Shutdown (ALS)

Ports		
Optical Interface :	Connector :	Connector : 4x (SC, ST, FC)
	Data rate :	100Mbps
	Duplex mode :	Full duplex
	Cable type :	MM 62.2/125□m, 50/125□m. SM 9/125□m
	Distance :	MM 2km, SM 15/30/50/80/120km, WDM 20/40/60/80km
	Wavelength:	1310nm, 1550nm,
Electrical Interface :	Connector :	4x RJ45
	Data rate :	10Mbps, 100Mbps
	Duplex mode	Half / Full duplex
	Cable type :	10Base-T Cat.3, 4, 5, UTP, 100Base-TX Cat.5, 5e
	Distance :	100 meters

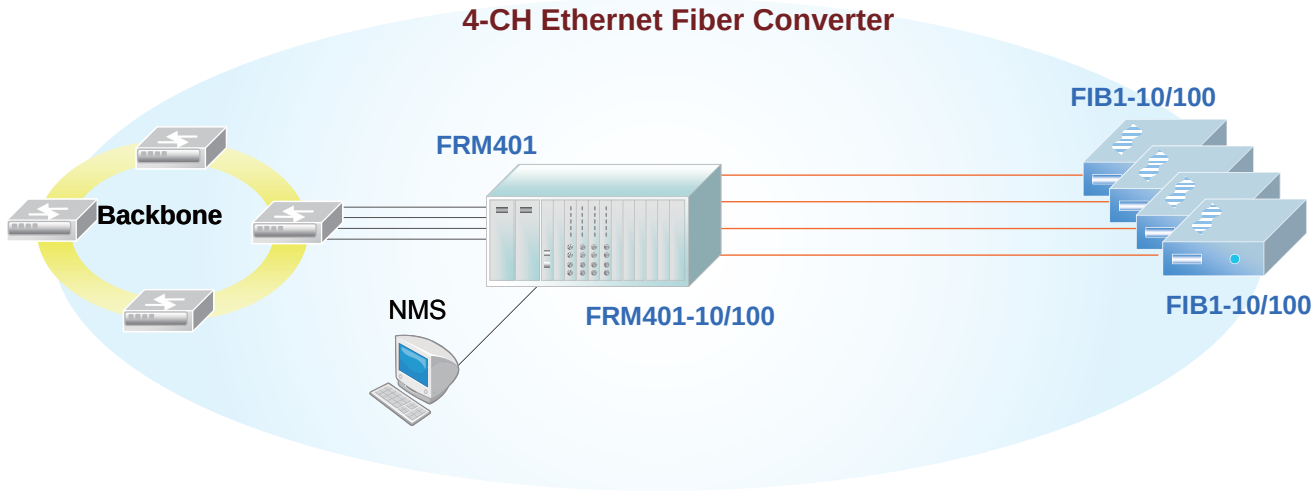

Ordering Information

FRM401-□□□□□ Optional card

SNMP : SNMP Card

10/100 : 4-port 10/100TX to 100FX card

Example: FRM401-10/100

2U Non-managed 8 Slot Chassis

FMC

The FMC is a 2U high 10" (or half 19") chassis that supports up to 8 non-managed FMC or V2MC media converters. The FMC provides an economic solution in low density fiber converter installations where no management features are required. Each FMC or VDTU2A-301 converter is an independent Ethernet to fiber or Ethernet to copper media converter that may be used as a stand-alone converter or placed in the FMC chassis. When two chassis are connected in tandem, they fit exactly into a 2U 19" rack space. With one of three built-in power options of universal AC (100-240VAC), DC 18-36VDC or DC 36-72VDC, the FMC provides the working DC voltages for up to 8 FMC or VDTU2A-301 converters. The built in cooling fan ensures that temperatures in the rack remain within the tolerated working range.

Features

- 2U, 10" (or half 19") rack supports up to 8 FMC converter
- Chassis with single built-in power available in AC or DC models.
- Cross flow cooling fan built-in.
- Designed for rack mounting in tandem

Power Input	AC : 100 ~240V DC24 : 18 ~ 36V, DC48 : 36 ~ 72V
Power Consumption	< 45W
Dimensions	196 x 252 x 89mm (D x W x H)
Weight	1.47 kg
Temperature	0~50°C (Operating) ,0~70°C (Storage)
Humidity	10~90% non-condensing
Certification	CE, FCC, RoHS
MTBF	65,000 h (25°C)

FMC Front view

- FMC line card included
  - Fast Ethernet
  - Power over Ethernet
  - Gigabit Ethernet
  - Plastic Optic Fiber
- Rackmount adapter bracket
- Card Locking mechanism

FMC Back view

- Fuse
- Power Switch
- AC Power Jack

- DC Power Jack

Ordering Information

FMC-CH08-□□□□□ Chassis type

AC : 100 ~ 240V AC power
DC24 : 18 ~ 36V DC power
DC48 : 36 ~ 72V DC power
Example: FMC-CH08-AC

FMC-□□□□□ Optional card

10/100 : Fast Ethernet converter
10/100P : Fast Ethernet converter with POE
10/100POF : Plastic over Fiber converter
1100ES :Gigabit Ethernet converter
Example: FMC-10/100

Non-Mananged Twin-rate Ethernet Fiber converter

FMC-1100ES

The FMC-1100E is a copper to fiber Gigabit Ethernet solution designed to make conversion between 10/100/1000Base-T to 100Base-FX and 10/100/1000Base-T to 1000Base-SX/LX.. The FMC-1000E provides the fiber multi-rate 100Mbps/1000Mbps Ethernet with SC connector. This non-managed converter has a simple DIP switch for setting auto or forced mode for both UTP and fiber port and for enabling or disabling its LFP (Link Fault Pass-thru) feature by setting fiber port to 1000Base-FX forced mode.

Features

- 10/100/1000Base-T to 1000Base-X
- 10/100/1000Base-T to 100Base-FX
- Auto-negotiation or forced mode in both copper and fiber
- Auto MDI/MDIX
- Forward 1632 bytes (Max.) packets
- Supports Flow control (Pause)
- Supports Link Fault Pass through (LFP) function

Optical Interface	Connector	SC
	Data rate	100Mbps, 1000Mbps
	Duplex mode	Full duplex
	Fiber	MM 50/125μm, 62.5/125μm. SM 9/125μm
	Distance	MM 550m, SM 15/30/50/80/120km WDM 20/40/60/80km
	Wavelength	MM 850nm, SM 1310,1550nm WDM 1310Tx/1550Rx (type A) 1550Tx/1310Rx (type B)
Electrical Interface	Connector	RJ45
	Data rate	10Mbps, 100Mbps, 1000Mbps
	Duplex mode	Half / Full duplex
	Cable	10Base-T Cat.3, 4, 5, UTP 100Base-TX Cat.5, 5e or higher 1000Base-T Cat.5, 5e or higher
Standard		IEEE 802.3, IEEE 802.3u, IEEE802.3ab, IEEE802.3z
Indications		LED (Power, FX-Link, TX-Link, TX-SPD, TX-Duplex, LFP)
Power Input		12VDC
Power Consumption		< 5W
Dimension		108 x 74 x 23mm (D x W x H)
Weight		120g
Temperature		0 ~ 50°C (Operating), 0 ~ 70°C (Storage)
Humidity		10 ~ 90% non-condensing
Certification		CE, FCC, LVD, RoHS
MTBF		65,000 hrs (25°C)

Managed GbE Media Converter

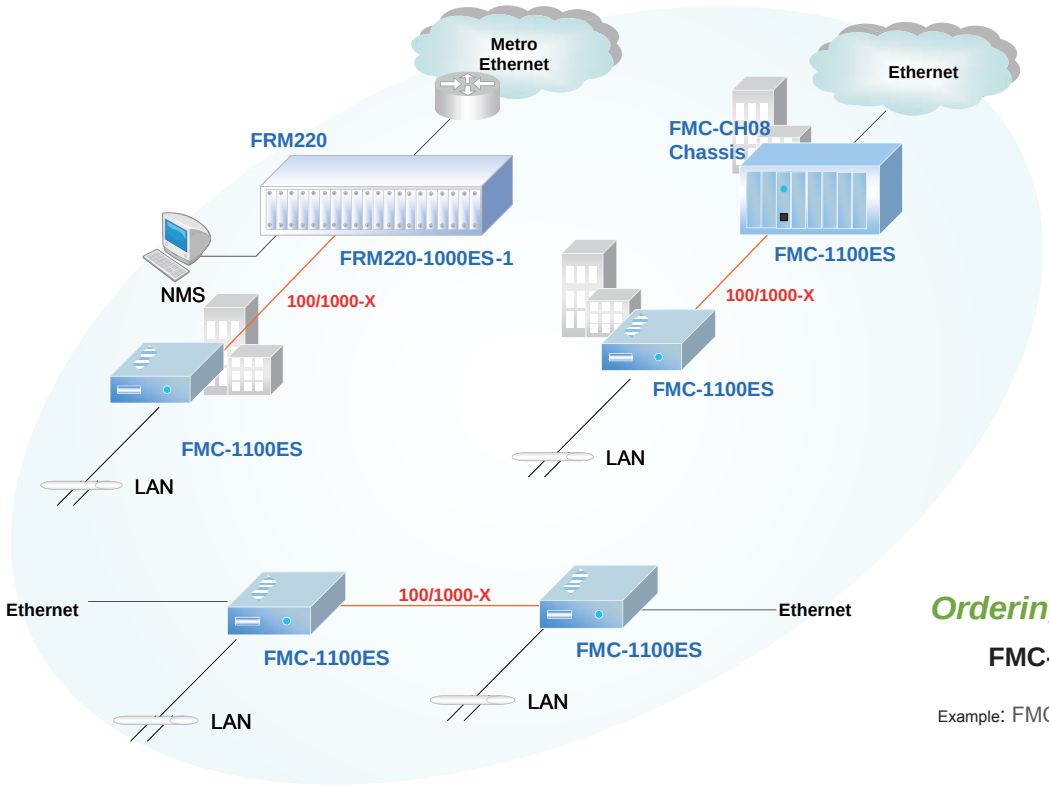

Ordering Information

FMC-□□□□□ Optional card
1100ES

Example: FMC-1100ES

Non-Mananged Fast Ethernet Fiber Converter

FMC-10/100
FMC-10/100P

The FMC-10/100 family are Fast Ethernet 10/100Base-TX to 100Base-FX non-managed stand-alone media converters, which give you the options to choose from the most popular fiber cabling connectors, ST, SC, FC, or SFP-LC. Both multi-mode and single mode converter models are available as well as BiDi which allows bi-directional transmissions using only a single fiber cable. When auto-negotiation is selected, these units will automatically tailor themselves to convert both half-duplex and full-duplex signals, according to IEEE802.3u standards. LED indicators signal the power status of the converter, UTP port speed, Link, and duplex status, FX port Link and duplex status. These stand-alone converters may also be concentrated into either the FMC-CH08 or FMC-CH17 non-managed chassis.

Features

- 10/100Base-TX to 100Base-FX Converter
- Auto-Negotiation or forced mode
- Auto MDI/MDIX
- Forward 1600 bytes (Max.) packets
- Supports Q in Q double tagged frame transparent
- Supports IEEE 802.1q Tag VLAN pass thru
- Support flow control (Pause)
- Supports Link Fault Pass through (LFP)
- Forward 9K jumbo packets in converter mode
- Supports 802.3af Power over Ethernet (only FMC-10/100P)

Optical Interface	Connector	1x9 (SC, ST, FC)
	Data rate	100Mbps
	Duplex mode	Full duplex
	Fiber	MM 50/125μm, 62.5/125μm. SM 9/125μm
	Distance	MM 2km, SM 15/30/50/80/120km, WDM 20/40/60/80km
	Wavelength	WDM 1310Tx/1550Rx (type A) 1550Tx/1310Rx (type B)
Electrical Interface	Connector	RJ45
	Data rate	10Mbps, 100Mpbs
	Duplex mode	Half / Full duplex
	Cable	10Base-T Cat.3, 4, 5, UTP, 100Base-TX Cat.5, 5e or higher
Standard		IEEE 802.3, IEEE 802.3u
Indications		LED (Power, FX Link, TX SPD, TX Link, TX Duplex, FEF)
Power Input		FMC: DC 12V In, FMC-AC/DC: AC 100 ~ 240V/ DC 24 ~ 72V
Power Consumption		< 4W
Dimension		FMC: 108 x 74 x 23mm (D x W x H) FMC-AC/DC: 192 x 86 x 30mm (D x W x H)
Weight		FMC: 120g, FMC-AC/DC: 550g
Temperature		0 ~ 50°C (Operating), -10 ~ 70°C (Storage)
Humidity		10 ~ 90% non-condensing
Certification		CE, FCC, RoHS
MTBF		65,000 hrs (25°C)

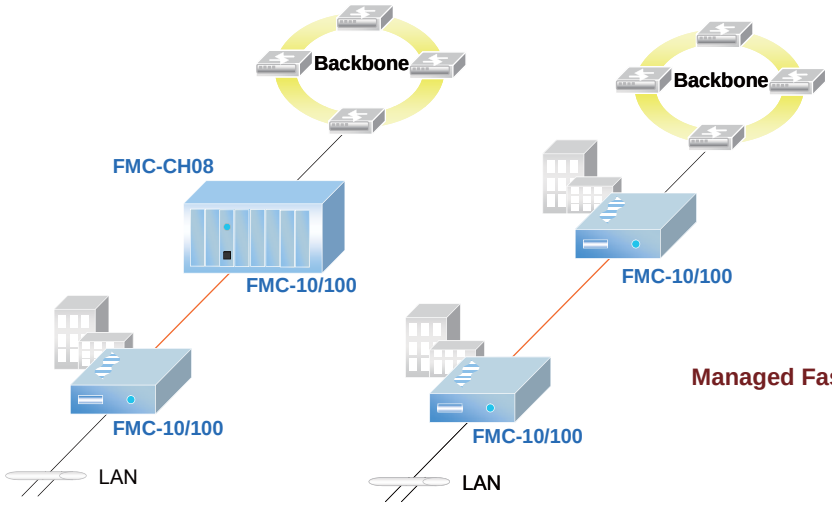

Managed Fast Ethernet Media Converter with POE

Ordering Information

FMC- □□□□□ Optional card

10/100

10/100P

Example: FMC-10/100

Non-Mananged Fast Ethernet Fiber Converter for Plastic Optical Fiber

FMC-10/100POF

The FMC-10/100POF family is a Fast Ethernet 10/100Base-TX to 100Base-FX non-managed stand-alone media converter which uses plastic optical fiber (POF). POF, as it is widely known, offers affordable, high-end connectivity for small office and home networks. With speeds of 100 Mbps optical Ethernet, it is a superior alternative to copper used in traditional networks. This is especially true for applications such as triple play and IPTV. The advantages to professional installers and amateur do-it-yourselfers are numerous. The discrete 2mm x 4.5mm duplex cable is easily concealed under carpets or easily pulled inside walls without breaking, while it can be easily cut with a pair of scissors. POF is robust enough to survive even the most novice installer. Troubleshooting is a snap as it uses 650nm visible red light to transfer data from one device to another. A quick glance inside the cable will indicate connectivity to the network by a red glow; no red light means no connection. It's that simple.

POF is completely safe. Because it is a light-based solution, there is no EMI (electro-magnetic interference) so it won't interfere with or be interfered by other electrical equipment. POF is already used in millions of cars worldwide to drive entertainment and information networks and has been proven reliable even in the most rugged environments. These stand-alone converters may also be concentrated into either the FMC-CH08 or FMC-CH17 non-managed chassis.

Features

- 10/100Base-TX to 100Base-FX Converter
- Auto-Negotiation or forced mode
- Auto MDI/MDIX
- Forward 1600 bytes (Max.) packets
- Supports Q in Q double tagged frame transparent
- Supports IEEE 802.1q Tag VLAN pass thru
- Support flow control (Pause)
- Supports Link Fault Pass through (LFP)
- Compact size and simple installation

Optical Interface	Connector	1x9 (SC, ST, FC) or SFP LC
	Data rate	100Mbps
	Duplex mode	Full duplex
	Fiber	Simplex POF cable
	Distance	MM 50meters
	Wavelength	MM 650nm
Electrical Interface	Connector	RJ45
	Data rate	10Mbps, 100Mbps
	Duplex mode	Half / Full duplex
	Cable	10Base-T Cat.3, 4, 5, UTP, 100Base-TX Cat.5, 5e or higher
Standard		IEEE 802.3, IEEE 802.3u, IEEE802.3ab
Indications		LED (Power, FX Link, TX SPD, TX Link, TX Duplex, FEF)
Power Input		12VDC
Power Consumption		< 4W
Dimension		108 x 74 x 23mm (D x W x H)
Weight		120g
Temperature		0 ~ 50°C (Operating), -10 ~ 70°C (Storage)
Humidity		10 ~ 90% non-condensing
Certification		CE, FCC, RoHS
MTBF		65,000 hrs (25°C)

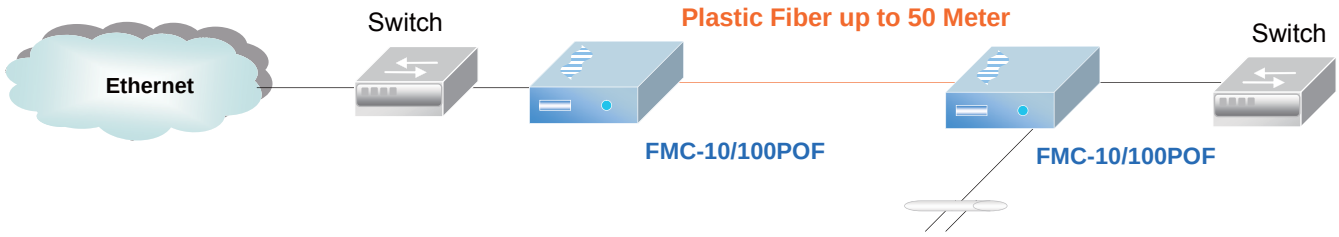

Ordering Information

FMC- □□□□□ Optional card

10/100POF

Example: FMC-10/100POF

Preliminary

Ethernet Demarcation Device(EDD)

ESW-102
ESW-202
ESW-104

CTC Union's carrier Ethernet demarcation transports Gigabit Ethernet (GbE) traffic over fiber, enabling EPL (Ethernet Private Line) & EVPL (Ethernet Virtual Private Line) services with advanced carrier Ethernet features per MEF (Metro Ethernet Forum)-9 and MEF-14 specifications. Supporting link and service Ethernet OAM schemes, the CTC Carrier Ethernet Demarcation also provides extensive fault detection and diagnostic capabilities to ensure that actual network use complies with pre-agreed service level agreements (SLAs).

Features

- MEF 9, MEF 14: EPL and EVPL
- Support 8K MAC
- Spanning Tree 802.1D, 802.1s, 802.1w
- Support 802.1q / 256 active VLANs
- Double VLAN Tagging (C-tag/S-tag) (IEEE 802.1ad) support for ISP application
- Various QoS capability (MAC/port/802.1p/Diffserv)
- Port-based rate limiting
- DHCP Snooping
- IGMP Snooping
- IPv6 support
- 802.3x and 802.1x support
- Jumbo frame for up to 10K
- Extensive OAM-P support
  - 802.3ah OAM
  - 802.1ag & Y.1731
  - TR-069
- Support DMZ, NAT
- AVB 802.1AS, 802.1Qat, 802.1Qav, 1588v2, Synchronous Ethernet
- SNMPv1/v2c/v3, Telnet, Web GUI

Optical Interface

Dual-speed (100M and 1000M) fiber interfaces (auto-detect)

Model:

ESW102: 1 WAN port SFP based

ESW202: 2 WAN ports SFP based

ESW104: 1 WAN port SFP based

Fiber optic: SFP based

Fast Ethernet (100BaseFX, 100BaseLX10, 100BaseBX10),

Gigabit Ethernet (1000BaseSX, 1000BaseLX10, 1000BaseBX10)

Copper: 10/100/1000BaseT (copper SFP based)

LAN

Model: Copper Based

ESW102: 2 LAN ports

ESW202: 2 LAN ports

ESW104: 4 LAN ports

Supports manual 10, 100,1000Base-T, Full, Half duplex, or n-way (Auto-Negotiation) each channel.

Standard

IEEE 802.3 10Base-T,

IEEE 802.3u 100Base-TX , 100Base-FX,

IEEE 802.3ab, 802.3z 1000Base-TX, 1000Base-X

LEDs

ESW102 & 202: Power, FX-1 Link, FX-2 Link,Test, UTP-1 Link, UTP-1 100/1000, UTP-2 Link, UTP-2 100/1000

ESW104: Power, Alarm, Test, Active, FX Link, UTP-1~4 Link, UTP-1~4 100/1000

Temperature

0 - 50°C (Operating); 0 - 70°C (Storage).

Humidity

20-80% non-condensing (Operating); 10-90% (Storage).

Power Consumption

Consumption: < 12W

Metro Ethernet

Applications

- Ethernet in the First Mile (EFM)
- Fiber to the Premise (FTTP), E-Line and E-LAN
- Enterprise markets

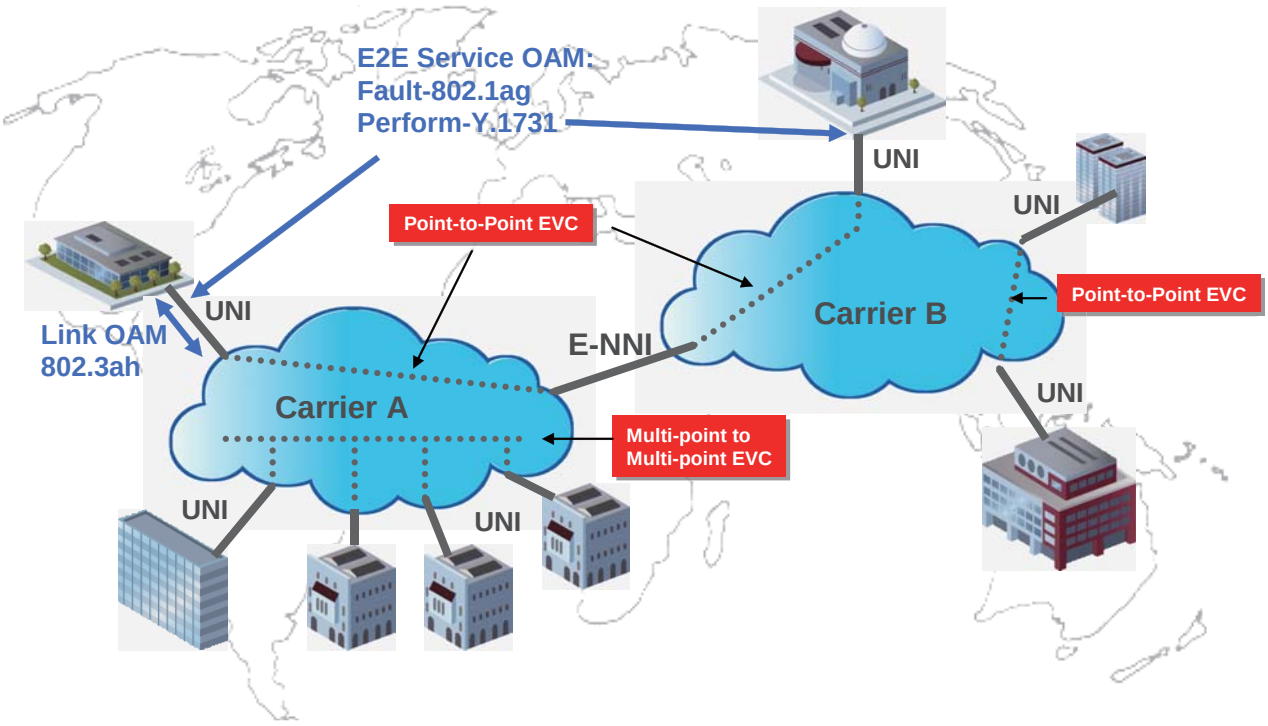

First Mile Fiber Access

The EDD Series at the customer premises allows the operator to reach customers over fiber, while still selling a standard Ethernet copper connection. Being part of the operator's network allows the converter to act as a demarcation point between the operator and the customer.

Managed Carrier Ethernet Demarcation Device

The EDD Series is fully manageable over the fiber connection via 802.3ah, 802.1ag / Y.1731, TR-069 from system status monitoring to provision configuration.

Cost - Effective

CTC Union's EDD Series offer a rich management tool set to reduce operational expenses (OPEX) and scale management to large access networks. The EDD Series augments existing IP/SNMP-based management frameworks with the IEEE 802.3ah Operations, Administration and Maintenance (OAM) protocol, the IEEE 802.1ag Configuration Fault Management (CFM) protocol, Y.1731 performance management and TR-069 CPE WAN management protocol.

Ordering Information

ESW-□□□□□ Model type

102
202
104

Example: ESW-102

8x 10/100/1000-T + 2x1000-SX/LX SFP L2 Managed Switch

GSW-3208M

GSW-3208M is a cost-effect high performance L2 Ethernet management switch – 8 x 10/100/1000Mbps TX ports and 2* SFP ports are supported. This switch supports remote management by SNMP, Http and Telnet interfaces, and local management by console interface. GSW-3208M supports lots of L2 switch management functions, e.g. 802.1Q VLAN, 802.1x Port Security, Rate Control, Port Configuration, Port Mirroring, Port Statistics, QoS functions, ... etc. Auto-MDIX function is supported for every TX port of the switch for easy cable connection.

Features

- 8x RJ45 ports, with 10/100/1000Mbps, Full/Half duplex auto-negotiation and Auto-MDIX functions
- 2x SFP sockets, Port9 and Port10
- Jumbo Fram
- Out-band console and in-band SNMP/Http/Https/Telnet management interface
- CISCO-like Command Line Interface
- 802.1Q VLAN, 1024 active VLAN maximum with VID 1~4094
- Port-based VLAN
- Private VLAN
- DHCP Relay Option 82
- IP-Port Binding
- Storm control
- Q in Q
- 802.3ad LACP for link aggregation
- 802.1x for user authentication, Dynamic VLAN and Guest VLAN are supported
- IGMP snooping and query and MVR
- 4 priority queues for Port-based, 802.1P QoS operation, with Strict Priority/WRR scheduling
- 802.1d Spanning Tree Compatible & 802.1w Rapid Spanning Tree
- Port rate limit for ingress/egress traffic
- Static MAC address binding / Dynamic Mac address number limit
- Event log and Syslog are supported
- Administrator IP/Subnet limit for security

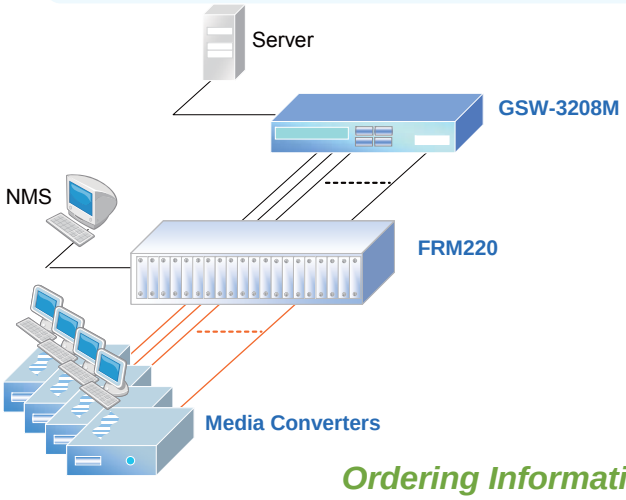

Ports	8x RJ45 ports, with 10/100/1000Mbps, Full/Half duplex auto-negotiation and Auto-MDIX and Force MDI/MDIX function 2* SFP ports with Port9 and Port10
Console Port	DB9 console port
Dimensions	250 x 117 x 37mm (W x D x H)
Filter & Forwarding Rate	Full line speed
Transmission method	Store-and-forward
Packet Buffer	500K Bytes
Mac Table Size	8K
Max Packet Size	1518 bytes (without tag), 9600 bytes for Jumbo Frame
Flow Control	Back pressure for half duplex, IEEE802.3x for full duplex
Management	Out-band : Console (CISCO-like Command Line Interface) In-band : SNMP/Telnet/Http/Https Administrator IP/Subnet limit is supported.
DHCP Client	Support DHCP Client / Relay / Option 82 functions
SNMP agent	Version. 1, 2c Support MIB II(RFC1213), Bridge MIB (RFC 1493), VLAN MIB (802.1Q, RFC2674), Private MIB
VLAN	802.1Q VLAN with 1024 co-current groups maximum from 4094 VLANs Port-based VLAN Private VLAN
Q in Q	Yes
Trunking	Support up to 8 trunks using either static or dynamic trunking(LACP)
QoS	Four priority queues per port for Port-based & 802.1p tagged-based QoS Strict Priority/WRR scheduling
Spanning Tree	802.1d Spanning Tree Compatible & 802.1w Rapid Spanning Tree
Port Mirror	Yes
Static Mac ID Access Limit	Yes, Limit on port
Dynamic Mac ID Number Limit	Yes
IP-Port Binding	Yes
IEEE 802.1x	Yes, Support Transparent and Authentication modes Dynamic VLAN & Guest VLAN are supported
Rate Control	Yes, 1~31 levels, with level is configured between 128Kbps ~ 30Mbps
Storm Control	Yes, for broadcast/flooding traffic control
IP Multicast	Yes, IGMP Snooping(256 Groups Max.) / query and MVR function
Software Upgrade	Out-band: Xmodem, In-band: TFTP/Http
Text Configuration	Yes, for easy edit
Configuration Down/Upload	Yes
Event Log	Yes, and Syslog is supported
LED Display	Per Port : Link/Act (Green:Gigabit, Yellow:10/100M), Full Duplex Per Device : Power, System
Input Power	100~240VAC, 50/60 Hz, 36 ~ 72VDC
Power Consumption	Max. 8 Watt
Environmental	0 ~ 50°C
Temperature	
Humidity	10% ~ 90% (non-condensing)
Standards	IEEE802.3(10BaseT Ethernet), IEEE802.3u(100Base Fast Ethernet), IEEE802.3ab(1000BaseT), IEEE802.3z(1000Base) IEEE802.1D, IEEE802.1w, IEEE802.1P, IEEE802.1Q, IEEE802.1x

Ordering Information

GSW- Model type

3208M

Example: GSW-3208M

24x 10/100/1000-T + 4x1000-SX/LX SFP L2 Managed Switch

GSW-3424M

Switch GSW-3424M is a cost-effect high performance 24G L2 Ethernet management switch – 24x 10/100/1000Mbps TX ports and 4x SFP ports are supported. This switch supports remote management by SNMP, Http and Telnet interfaces, and local management by console interface. Switch GSW-3424M supports lots of L2 switch management functions, e.g. 802.1Q VLAN, 802.1x Port Security, Rate Control, Port Configuration, Port Mirroring, Port Statistics, QoS functions, ... etc.
Auto-MDIX function is supported for every TX port of the switch for easy cable connection.

Features

- 24x 10/100/1000T + 4x 1000SX/LX SFP slot shared with Port 21~24 TX ports, auto-detect the connection
- Jumbo Frame
- Console, SNMP, Http, Https, Telnet management
- Command Line Interface
- 802.1Q VLAN, Port-based VLAN, Private VLAN
- VLAN Stacking(Q in Q)
- DHCP Relay Option 82
- IP-Port Binding
- Storm control
- 802.3ad LACP for link aggregation
- 802.1x for user authentication, Dynamic VLAN and Guest VLAN are supported
- IGMP snooping and query and MVR(Multicast VLAN Registration)
- 4 priority queues for Port-based, 802.1P QoS operation, with Strict Priority/WRR scheduling
- 802.1d Spanning Tree Compatible & 802.1w Rapid Spanning Tree
- Port rate limit for ingress/egress traffic
- Static MAC address binding / Dynamic Mac address number limit
- Event log and Syslog
- Administrator IP/Subnet limit for security

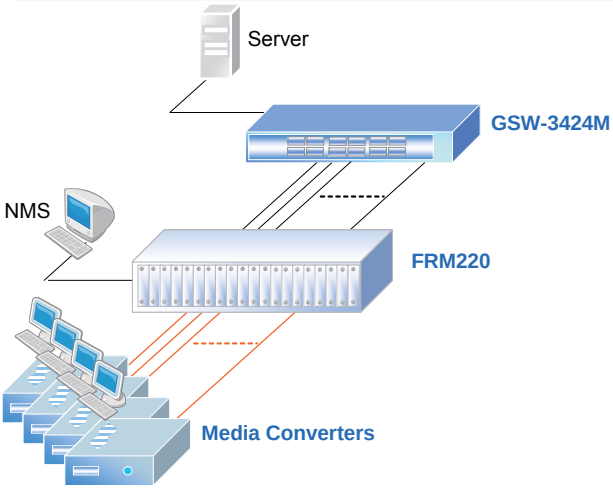

Ports	24 ports 10/100/1000Mbps, RJ45 4x SFP ports
Console Port	DB9 console port
Filter & Forward Rate	Full line speed
Transmission method	Store-and-forward
Packet Buffer	500K Bytes
Mac Table Size	8K
Max Packet Size	9600 bytes
Switching Capacity	48 Gbps
Packet Forward Rate	35.7Mpps
Flow Control	Back pressure for half duplex, IEEE802.3x for full duplex
Management	Out-band : Console (CLI) In-band : SNMP/Telnet/Http/Https Administrator IP/Subnet limit
DHCP	DHCP Client / Relay / Option 82
SNMP agent	MIB II(RFC1213), Bridge MIB (RFC 1493), V1, 2c VLAN MIB (802.1Q, RFC2674), Private MIB
VLAN	802.1Q VLAN with 1024 co-current groups maximum from 4094 VLANs Port-based VLAN, Private VLAN
Q in Q	Yes
Trunking	Static or dynamic trunking (LACP)
QoS	4 priority queues per port for Port-based & 802.1p tagged-based QoS Strict Priority/WRR scheduling
Spanning Tree	802.1d STP, RSTP
Port Mirror	Yes
Static Mac ID Limit	Limit on port
Dynamic Mac ID Limit	Yes
IP-Port Binding	Yes
IEEE 802.1x	Yes, Support Transparent and Authentication modes Dynamic VLAN & Guest VLAN are supported
Rate Control	128Kbps ~ 30Mbps
Storm Control	Broadcast/flooding/multicast control
IP Multicast	IGMP Snooping (256 Groups Max.) / query and MVR function
Software Upgrade	Xmodem, TFTP/Http/Https
Text Configuration	Yes, for easy edit
Event Log	Yes, and Syslog is supported
LED Display	Link/Act, Full Duplex, Power, System
Input Power	100~240VAC, 50/60 Hz
Power Consumption	Max. 24W
Operating Temperature	0 ~ 50°C
Humidity	10% ~ 90% (non-condensing)
Dimensions	440W x 172D x 44H mm
Standards	IEEE802.3, IEEE802.3u, IEEE802.3ab, IEEE802.3z IEEE802.1D, IEEE802.1w, IEEE802.1P, IEEE802.1Q, IEEE802.1x

Ordering Information

GSW-□□□□□ Model type

3424M

Example: GSW-3424M

Non-managed Fast Ethernet Switch

FSW-2104

The FSW-2104 provides a low cost solution for non-managed Ethernet fiber switches. The FSW-2104 is a 4-port 10/100Base-TX plus 1-port 100Base-FX Fast Ethernet switch. It is designed for small workgroup applications that require a long distance connection to the backbone, such as between buildings, offices, or within a campus location. FSW2104 provide full-duplex capability on each auto-negotiating port, for enhanced performance. A wide range of transceiver selection provides fiber connection with SC, FC or ST type connectors in multimode or single mode and at distance from 2 to 120km as well as BiDi (single fiber) at distances of 20, 40, 60, or 80km.

Optical Interface	Connector	1x9 (SC, ST)
	Data rate	100Mbps
	Duplex mode	Full duplex
	Fiber	MM 50/125μm, 62.5/125μm. SM 9/125μm
	Distance	MM 2km, SM 15/30/50/80/120km, WDM 20/40/60/80km
	Wavelength	MM 1310nm, SM 1310,1550nm WDM 1310Tx/1550Rx (type A) 1550Tx/1310Rx (type B)
Electrical Interface	Connector	RJ45
	Data rate	10Mbps, 100Mbps
	Duplex mode	Half / Full duplex
	Cable	10Base-T Cat.3, 4, 5, UTP, 100Base-TX Cat.5, 5e or higher
Standard		IEEE 802.3, IEEE 802.3u
Indications		LED (FX Link, TX SPD, TX Link/Act)
Power Input		Card : 12VDC Standalone : AC, DC options
Power Consumption		< 5W
Dimension		138 × 77 × 28mm (D x W x H)
Weight		450g
Temperature		0 ~ 50°C (Operating), 0 ~ 70°C (Storage)
Humidity		10 ~ 90% non-condensing
Certification		CE, FCC, RoHS
MTBF		57,000 hrs (25°C)

Features

- 10/100Base-TX to 100Base-FX
- Auto-Negotiation
- Auto MDI / MDIX
- Forward 1552 bytes (Max.) packets
- Support 1K MAC address
- 512k bits packet buffer memory
- Supports Broadcast Storm protection

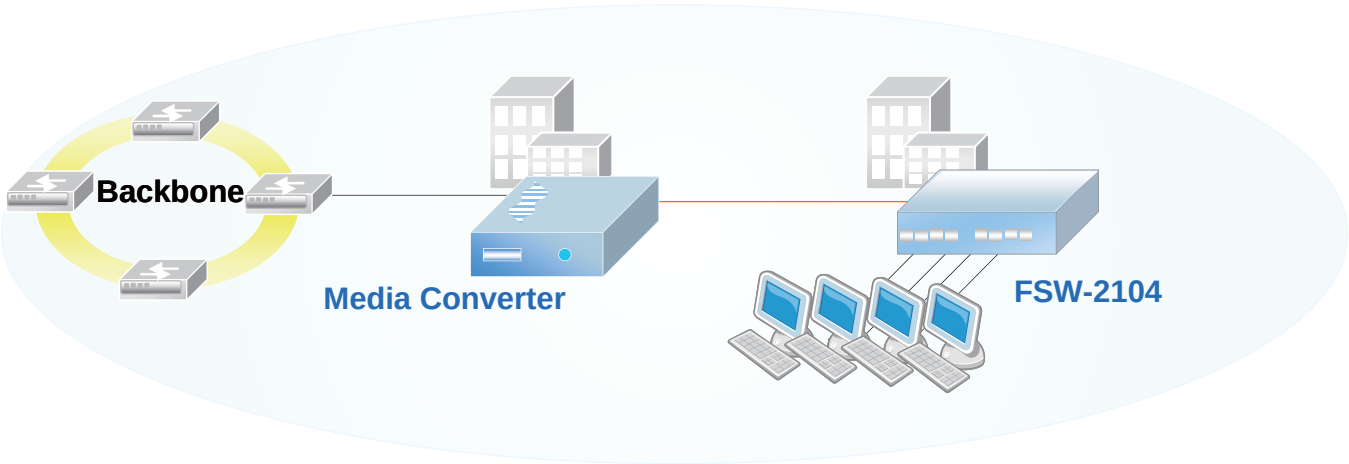

Ordering Information

FSW-□□□□□ Model type

2104

Example: FSW-2104

Non-managed Fast Ethernet Switch

FSW-2202
FSW-2204

The FSW-2200 family provides a low cost solution for non-managed Ethernet fiber switches. The FSW-2202 is a 2-port 10/100Base-TX plus 2-port 100Base-FX Fast Ethernet switch. The FSW-2204 is a 4-port 10/100Base-TX plus 2-port 100Base-FX Fast Ethernet Switch. They are all designed for small workgroup applications that require a long distance connection to the backbone, such as between buildings, offices, or within a campus location. They provide full-duplex capability on each auto-negotiating port, for enhanced performance. A wide range of transceiver selection provides fiber connection with SC, FC or ST type connectors in multimode or single mode and at distance from 2 to 120km as well as BiDi (single fiber) at distances of 20, 40, 60, or 80km.

Optical Interface	Connector	1x9 (SC, ST)
	Data rate	100Mbps
	Duplex mode	Full duplex
	Fiber	MM 50/125μm, 62.5/125μm. SM 9/125μm
	Distance	MM 2km, SM 15/30/50/80/120km, WDM 20/40/60/80km
	Wavelength	MM 1310nm, SM 1310,1550nm WDM 1310Tx/1550Rx (type A) 1550Tx/1310Rx (type B)
Electrical Interface	Connector	RJ45
	Data rate	10Mbps, 100Mbps
	Duplex mode	Half / Full duplex
	Cable	10Base-T Cat.3, 4, 5, UTP, 100Base-TX Cat.5, 5e or higher
Standard		IEEE 802.3, IEEE 802.3u
Indications		LED (FX Link, TX SPD, TX Link/Act)
Power Input		5VDC
Power Consumption		< 5W
Dimension		138 × 77 × 28mm (D x W x H)
Weight		450g
Temperature		0 ~ 50°C (Operating), 0 ~ 70°C (Storage)
Humidity		10 ~ 90% non-condensing
Certification		CE, FCC, RoHS
MTBF		57,000 hrs (25°C)

Features

- 10/100Base-TX to 100Base-FX
- Auto-Negotiation
- Auto MDI / MDIX
- Forward 1552 bytes (Max.) packets
- Support 1K MAC address
- 512k bits packet buffer memory
- Supports Broadcast Storm protection

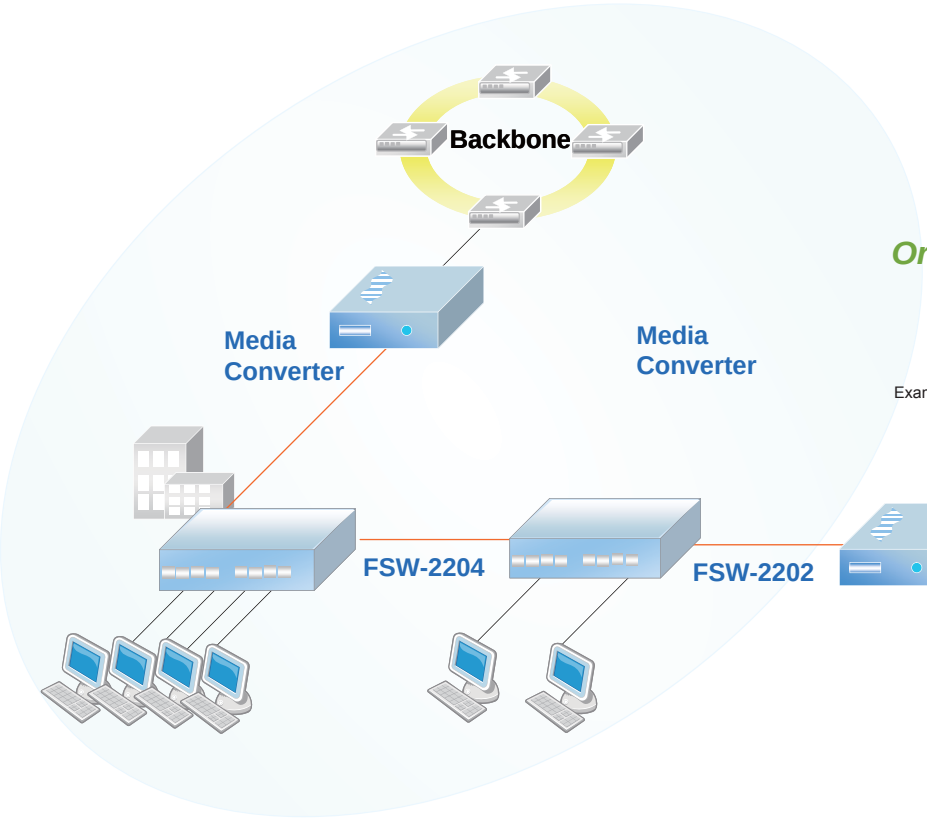

Ordering Information

FSW- □□□□□ Model type

2202
2204

Example: FSW-2104

Copper IAD Gateway with WiFi

GW-521EW

The GW-521EW is a FXS gateway works as a bridging between local PSTN and IP network for voice and FAX services. The GW-521EW gateway provides two FXS ports connecting to local PSTN. IT is an interface to access PSTN with IP-PBX solution. A 10/100Base-TX interface connects local Ethernet network with IP phone and H.323 Gatekeeper or call manager. The data and voice service are working in a local Ethernet network and VoIP-based IAD (Internet Access Device), which is designed to interoperate with end-to-end fiber from major vendors to meet the worldwide market requirements of triple-play services. It is Class 1 laser product complying with EN 60825-1. The integrated Ethernet switch features automatic crossover-correction and auto-negotiation for easy connection to user's PCs or LAN environment. The GW521EW model also features a built-in 802.11g WLAN which brings relief to those troublesome wirings. Two lines of telephony service are provided using VoIP technology with SIP and MGCP signaling protocol.

Electrical Interface	Connector	RJ45
	Data rate	10Mbps, 100Mbps
	Duplex mode	Half / Full duplex
	Cable	10Base-T Cat.3, 4, 5, UTP, 100Base-TX Cat.5, 5e or higher
Standard		IEEE 802.3, IEEE 802.3u
Indications		LED (FX Link, TX SPD, TX Link/Act)
Power Input		12VDC
Power Consumption		< 5W
Dimension		190 x 376 x 124mm (D x W x H)
Weight		360g
Temperature		0 ~ 50°C (Operating), -25 ~ 70°C (Storage)
Humidity		10 ~ 90% non-condensing
Certification		CE, FCC, RoHS
MTBF		75,000 hrs (25°C)

Features

Voice Features
- G.711 a/μ-law, G.723.1, G.726, G.729A/B
- DTMF Detection and Generation
- Silence Suppression & Detection
- Comfort Noise Generation (CNG)
- Voice Activity Detection (VAD)
- Echo Cancellation (G.165/G.168)
- Adaptive (Dynamic) Jitter Buffer
- Call Progress Tone Generation
- Programmable Gain Control
- Inbuilt Local Mixer

SIP Call Features
- Peer to Peer Call
- Call Hold / Retrieve
- Call Waiting
- Call Pick Up
- Call Park / Retrieve (SIP Server Required)
- Call Forward - unconditional, busy, no answer
- Call Transfer - attended, unattended
- Do Not Disturb
- Speed Dialing
- Repeat Dialing
- Three-way Calling
- MWI (RFC-3842)
- Hot Line and Warm Line

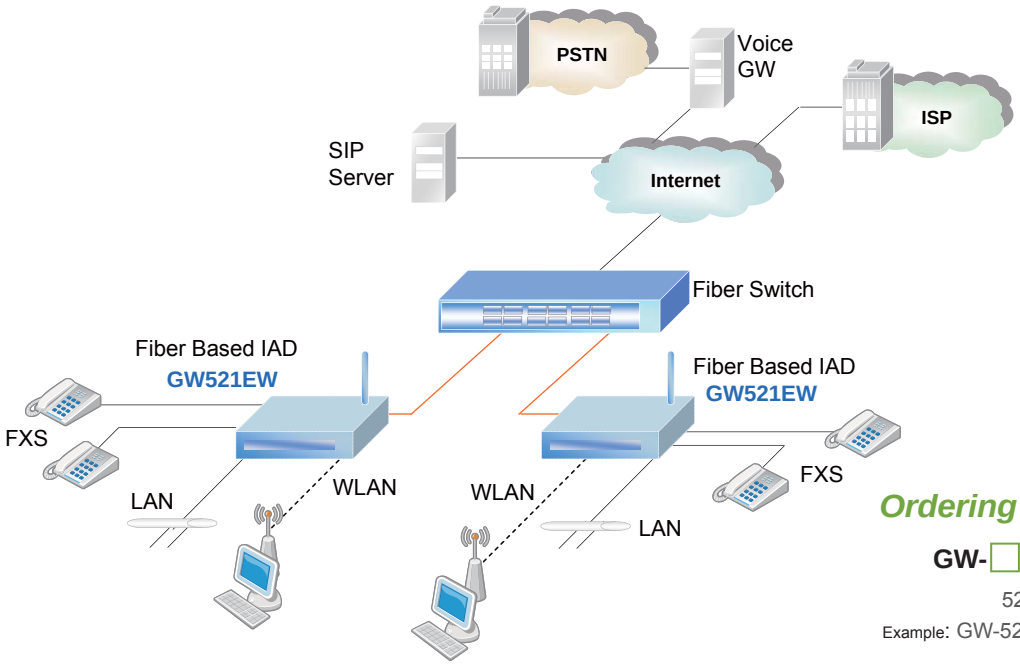

Ordering Information

GW-□□□□□ Optional card

521EW

Example: GW-521EW

VoIP Router	Protocol: SIP (RFC3261) / MGCP (RFC2705) Voice: 2FXS, Ethernet: 1WAN 4LAN, Wi-Fi IEEE802.11b/g, TR069 / 104, SIP over TLS
SIP Method Support	ACK, BYE, CANCEL, INFO, INVITE, MESSAGE, NOTIFY, OPTION, PING, PRACK, PUBLICSH, REFER, REGISTER, SUBSCRIBE, UPDATE
Telephony	• In-Band DTMF, Out-of-Band DTMF Relay (RFC2833 or SIP INFO) • DTMF / PULSE Dial Support • Caller ID Generation / Detection: DTMF,FSK-Bellcore Type 1 & 2, FSK-ETSI Type 1 & 2, FSK: Calling Name, Number, Date and Time, vMWI • Polarity Reversal Detection (FXO) and Generation (FXS) • T.30 FAX Bypass to G.711, T.38 Real Time FAX Relay • Failsafe mechanism: Network, Service, Power Failure, (FXS relay to FXO) • Life Line Support (OB-201L, OB-110) • Recordable Greeting Message (FXO) • Emergency Number Table (FXO) • Modem over IP Up to V.34 • PSTN Call Tone Detection (FXO) and Generation (FXS) • ROH Tone (Receiver Off-Hook Tone @ 480 Hz) • Loop Current Suppression
Wireless	• 802.11 b/g Access Point and Client mode (WISP), Wi-Fi compliant • 802.1x, WEP, WPA TKIP and WPA2 AES/Mixed mode for PSK and TLS (Radius) • Wireless Auto-channel selection • WDS supported with WEP, TKIP and AES encryption • Wireless access control by MAC address (deny or accept) • Support Ad-hoc and infrastructure mode • Support MAC Clone (single Ether device) and NAT2.5 (Multiple Ether clients) • Support site survey scan and manual connect • Support WPA/WPA2 TLS client • Support universal repeater mode
IP Network	• WAN: Static IP, PPPoE, DHCP, PPTP • Network Protocol Support: IP, TCP, UDP, TFTP, FTP, RTP, RTCP, ARP, RARP, ICMP, NTP, SNTP, NMP v1/v2, HTTP, HTTPS, DNS, DNS SRV, Telnet, DHCP Server, DHCP Client, STUN Client, UPnP, IGMP • NAT Functions : Support up to 255 Clients, Port Forwarding (Virtual Servers), DMZ, Port Triggering • QoS Support: WAN: DiffServ, IP Precedence, Priority Queue, Rate Control, 802.1Q (VLAN Tagging), 802.1p (Priority Tag), LAN: Rate Limit • DDNS Support: Dyndns.org (Dynamic and Custom), TZO, Peanut Hull, 3322.org
Network Security	• PPTP VPN Client, Port Filtering, IP Filtering, MAC Filtering, Virtual Server, URL Filter • DIGEST Authentication, MD5 Encryption, DoS Protection
Management	• Web Based Configuration • Telnet • IVR • Reset to Default Button • Auto-provisioning (HTTP / HTTPS / TFTP) • FTP / TFTP / HTTP Remote Software Upgrade • Configuration Backup and Restore • TR-069/104 (Option)
SIP Call Management	• Support Outbound Proxy • Register up to three SIP servers • SIP Registration Failover Mechanism • Group Hunting ■ Privacy Mechanism / Private Extensions to SIP • Session Timers (Update / Re-invite) • DNS SRV Support • Call Types: Voice / Modem / FAX • Call Routing by Prefix Number • User Programmable Dial Plan Support • Toll-Free Support (FXO) • Automatic Calling Number Manipulation (VoIP & FXO) ■ CDR Client • Phone Book Manager Client • Manual Peer Table (for P2P calls) • E.164 Numbering, ENUM support • Symmetric RTP
SIP Account Management	• By port registration • By device registration (share account) • Mixed mode (Hunt number for inbound, by port number for outbound) • Invite with Challenge • Register by SIP Server IP Address or Domain Name • Support RFC3986 SIP URI format
MGCP CALL MANAGEMENT (OPTION)	IETF MGCP V.1.0, RFC 2705

Fiber IAD Gateway with WiFi

GW421FW

The GW421F is a single mode Fiber and VoIP-based IAD (Internet Access Device), which is designed to interoperate with end-to-end fiber from major vendors to meet the worldwide market requirements of triple-play services. It is Class 1 laser product complying with EN 60825-1. The integrated Ethernet switch features automatic crossover-correction and auto-negotiation for easy connection to user's PCs or LAN environment. The GW421FW model also features a built-in 802.11g WLAN which brings relief to those troublesome wirings. Two lines of telephony service are provided using VoIP technology with SIP and MGCP signaling protocol.

Features

- Fiber interface supports up to 100 Mbps downstream and 100 Mbps upstream rates
- Integrated four-port Ethernet switch with automatic speed-sensing and crossover correction
- 802.11b/g WLAN supports up to 54 Mbps transmission rate
- Secures transmitting encryption by either 802.1x; WEP; WEP2; WPA; WPA2; TKIP; AES; 802.11i
- One FXO port for failsafe lifeline, two FXS ports for VoIP using POTS phone set
- Supports voice CODECs like G.711, G.726, G.729AB, BV16, ILBC, T.38 etc.; programmable G.168 echo cancellation, adaptive jitter buffer and packet loss concealment
- Voice activity detection (VAD), comfort noise generation (CNG) and caller ID
- DTMF tone detection and generation; Fax / Modem detection and pass-through
- Supports SIP signaling protocol and bonus services like call forwarding, call waiting, call transfer, call busy, call return, enquiry service, CLIP/CLIR and three way conference
- Supports Networking protocols such as PPP, NAT, Routing, DHCP server / relay / client
- Configuration and management by Web-browser through the
- Ethernet interface and remotely through WAN interface
- Firmware upgradeable through HTTP / TFTP
- Supports TR-069 and TR-104

Optical Interface :	Connector :	SC
	Data rate :	100Mbps
	Duplex mode :	Full duplex
	Fiber :	SM 9/125μm
	Distance :	WDM 20km
	Wavelength :	T1310/R1550nm
Electrical Interface :	Connector :	RJ45
	Data rate :	10Mbps, 100Mbps
	Duplex mode :	Half / Full duplex
	Cable :	10Base-T Cat.3, 4, 5, UTP, 100Base-TX Cat.5, 5e
Indications		Power, WAN, Internet, TEL1, TEL2, Ethernet, WLAN
Power		DC 15V In
Power Consumption		< 15W
Dimensions		220x 165x 29mm(D x W x H)
Weight		450g
Temperature		0~50°C (Operating) ,0~70°C (Storage)
Humidity		10~90% non-condensing
Certification		CE, FCC, RoHS
MTBF		57,000 hours

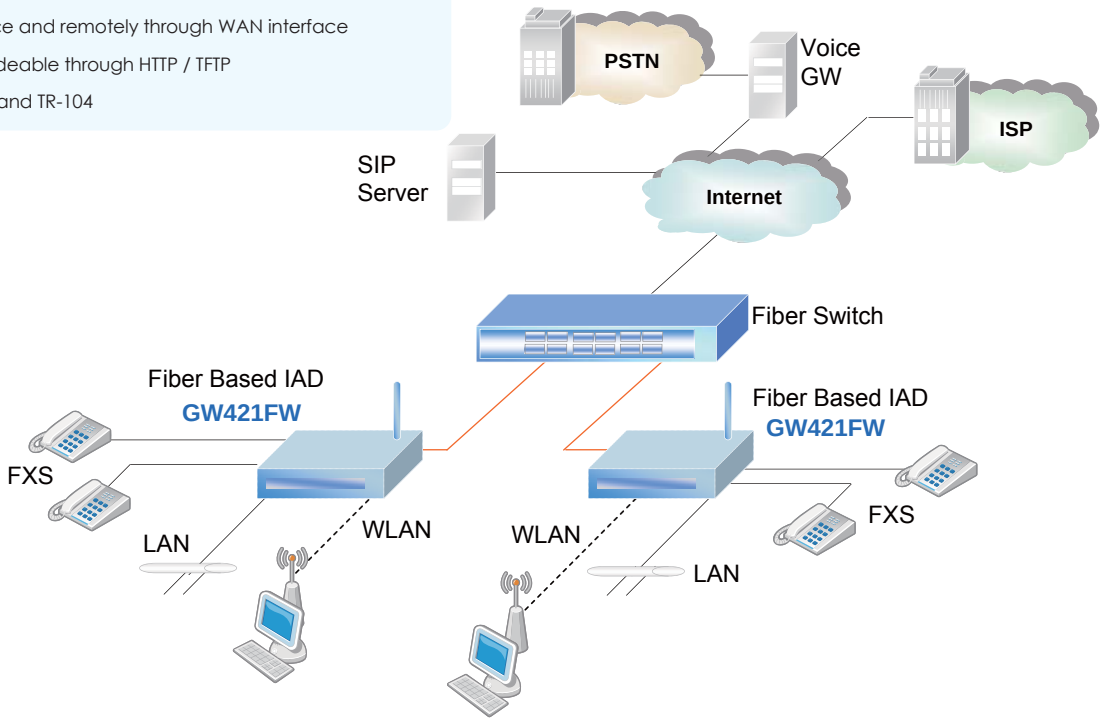

Software	
Routing	Support point to point protocol (PPPoE) and user authentication via PAP, CHAP or MS-CHAP
	Routing information protocol (RIP) v1 and v2, static route
	DHCP client, server and relay agent
	NAT/PAT - RFC 1631 with support for extensive ALGs
	DNS relay
Firewall	NAT: 16 sessions, DMZ and ALGs
	Stateful packet inspection (SPI) with DOS protection - Ping of death, SYN flood land
	Protection against IP and MAC address spoofing
	UPnP NAT traversal and VPN/IPSec pass-through
Wireless	Supports 802.1x ; WEP ; WEP2 ; WPA ; WPA2 ; TKIP ; AES ; 802.1i
	Hidden SSID
	WMM for advanced Quality of Service
	AES in hardware
	125 High speed mode: Standards-plus performance enhancement delivers best real-world performance
	as the client card use the same 125 high speed mode
Voice	FXO for failsafe lifeline
	Supports vocie CODEC s like G.711, G.726, G.729AB, BV16, ILBC, T.38 etc.
	G.168 line echo cancellation with programmable tail
	Adaptive jitter buffer, packet loss concealment (PLC), voice activity detection (VAD), comfort noise generation (CNG) and Caller ID
	DTMF tone detection and generation ; Fax/Modem detection and pass-through
VoIP and Telephony	Supports SIP (RFC 3261), SDP (RFC 2327, RFC 3264) as well as both TCP and UDP transport
Bonus Services	Supports User agent Client (UAC) - User agent server (UAS) call, or proxy call routing
	Supports SIP and telephone URL addressing
	Supports in-band DTMF tone sending/receiving and out-band DTMF signaling with RTP, as per RFC 2833
	Bonus services include - Call forwarding: Unconditional, No response, On busy
	- Call waiting: Force busy, Pickup and release old, Pickup and put old on hold, Switch between two calls
	- Call Transfer, Call back busy subscriber, Call back last number called (call return)
	- Enquiry service
	Provisioning through TFTP client with configuration profile
Configuration and	SNMP GETs, SETs and TRAPs for four group in MIB-II
Network	Embedded syslog ; SNTP with DHCP options
Management	UPnP Internet gateway device (IGD) compliance
	Management and configuration via Web/HTTP
	Firmware upgrade using HTTP and TFTP
	Supports TR-069 and with parameters: Device info, management server, time, IPPing diagonostic, etc.
	Supports TR-014

Ordering Information

GW- □□□□□ Model type

421FW

Example: GW-421FW

5U CWDM Managed Platform
SML-5000

The SigmaLinks5000 is a flexible, cost-effective optical transport system, designed to multiplex, de-multiplex and switch high-speed data for storage, video and voice applications. The SML-5000 is housed in a 5U, 19" or 23" rack mountable transport platform for ITU G.694.2 compliant CWDM applications, which features 17 universal hot-swappable module slots. Currently supported module line cards include SNMP, Transponders, Mux/ Demux, OADM and Optical protection. The SML-5000 supports optional redundant power and SNMP management. Another unique feature of the SML-5000 is a line card design which may be transformed into stand-alone units. The use of a common PCB card which may either be placed in the rack or used as a stand-alone unit reduces manufacturing costs as well as the inventory of spares required by distributors, installers, and end users. The NMS (Network Management System) option includes an SNMP card (agent) and standard MIB file for importation and compilation into network management platforms such as HP OpenView or CA Unicenter. This allows remote configuration and system monitoring via industry standard network management software.

Features

- 5U 19 (23)" chassis accommodate up to 17 card modules
- All modules are hot-swappable
- Redundant AC, DC power and cooling fans
- Chassis cascade up to 6 with one IP management
- Temperature sensors constantly monitor internal environment
- LCD status indication with keypad control
- TFTP firmware upgrade
- Supports Console, Telnet, SNMP and Web management
- Alarm Relay contacts
- Up to 8 CWDM wavelengths in compliance with ITU G.694.2

Connectors

Console port features an RS232 (DB9) connector,

Alarm : Terminal Block

Physical Specifications

Dimensions: 440 x 250 x 220mm (W x D x H)

Weight: 9.5kg w/o P/S

Power Characteristics

AC input: 100 ~ 240V AC

DC input: 24VDC, 48VDC, 72VDC

Environmental Specifications

Operating 0°C to 50°C

Storage -10°C to 70°C

Relative humidity 5% to 90% non-condensing

Predicted MTBF : 65,000 hrs (25°C)

Certification

FCC class A, VCCI class A, CE, RoHS

SigmaLinks 5000 Major Components

- Control Card with LCD menu operation
  For power, temperature monitoring and local control
- AC Power Module Hot swappable 90~264VAC
- DC Power Module Hot swappable18~74VDC
- Hot swappable Line Cards:
  - Transponder
  - Mux/Demux
  - Optical line Protection
  - Optical Add/Drop Mux (OADM)
  - SNMP
- Field replaceable Intelligent Fan
- 5RU 19' or 23" rack mountable Main Chassis
- Chassis cascade up to ID5
- Alarm relay

Control card with LCD Menu Operation

This hot-swappable controller serves two basic and very important functions; It provides a local human interface for monitoring/provisioning the SML5000 and it provides a communication link to the SNMP card that supports remote management via Telnet, Web or SNMP. The local maintenance interface can employ a serial "dumb"

Power Redundancy

SML5000 chassis power supplies are hot swappable and modular, installing two into a chassis provides redundancy should a single power supply fail.

Intelligent Cooling Fan

To further increase system reliability, the SML5000 chassis is fitted with one fan module, incorporating five cooling fans, fixed on the rear of the chassis. The cooling fans may be manually controlled or programmed to start whenever the internal environmental temperature exceeds 40C.

Chassis cascade

The SML5000 features cascadeable management which allows managing a stack (up to 6 chassis) from a single IP address. Chassis are interconnected with standard UTP cables that carry control signals. Each chassis has its own ID, starting with the master chassis ID0 and cascading up to ID5.

Network Management

The SML5000 chassis provides an SNMP card which can be installed into any slot of chassis. The SNMP card allows a network administrator with the ability to configure and monitor the status of the blades. Management can be achieved locally over RS232, or over the network by Telnet, Web or SNMP

Protocol Supported

The SML5000 chassis allows network administrators to deploy the chassis in a wide range of network. Technologies supported by the chassis included Transponder, Mux/Demux, Optical line Protection and Optical Add/Drop Mux (OADM)

CWDM 8-Service over a dual strand fiber

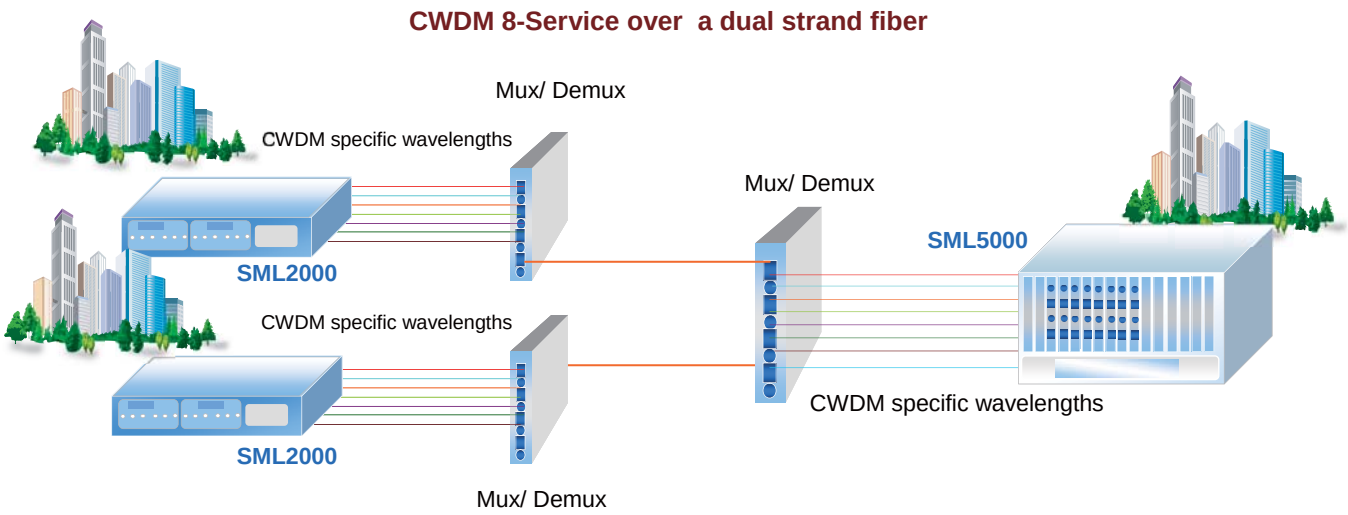

Ordering Information

SML-50-□□□□□ Chassis type

Chassis: 5U 17-Slot chassis
AC : 100~240V
DC24 : 18~36V
DC48 : 36~72V

Example: SML-50-Chassis

2U CWDM Managed Platform
SML-2000

The SigmaLinks 2000 is a flexible, cost-effective optical transport system, designed to multiplex, de-multiplex and switch high-speed data for storage, video and voice applications. The SML-2000 is housed in a standard 2U, 19" or 23" rack mountable transport platform for ITU G.694.2 compliant CWDM applications, which features 6 universal hot-swappable module slots. Currently supported module line cards include SNMP, Transponders, Mux/Demux, OADM, Optical protection and optical channel monitors. The SML2000 supports optional redundant power and SNMP management. Another unique feature of the SML2000 is a line card design which may be transformed into stand-alone units. The use of a common PCB card which may either be placed in the rack or used as a stand-alone unit reduces manufacturing costs as well as the inventory of spares required by distributors, installers, and end users. The NMS (Network Management System) option includes an SNMP card (agent) and standard MIB file for importation and compilation into network management platforms such as HP OpenView or CA Unicenter. This allows remote configuration and system monitoring via industry standard network management software.

Features

- 2U 19 (23)" chassis accommodate up to 6 card modules
- All modules are hot-swappable
- Redundant AC, DC power and cooling fans
- TFTP firmware upgrade
- Supports Console, Telnet, SNMP and Web management
- Alarm Relay contacts
- Up to 8 CWDM wavelengths in compliance with ITU G.694.2

Connectors

Console port features an RS232 (DB9) connector,
Alarm : Terminal Block

Physical Specifications

Dimensions: 440 x 250 x 89mm (W x D x H)
Weight: 4.8kg w/o P/S

Power Characteristics

AC input: 100 ~ 240V AC
DC input: 24VDC, 48VDC, 72VDC

Environmental Specifications

Operating 0°C to 50°C
Storage -10°C to 70°C
Relative humidity 5% to 90% non-condensing
Predicted MTBF : 65,000 hrs (25°C)

Certification

FCC class A, VCCI class A, CE, RoHS

SigmaLinks 2000 Major Components

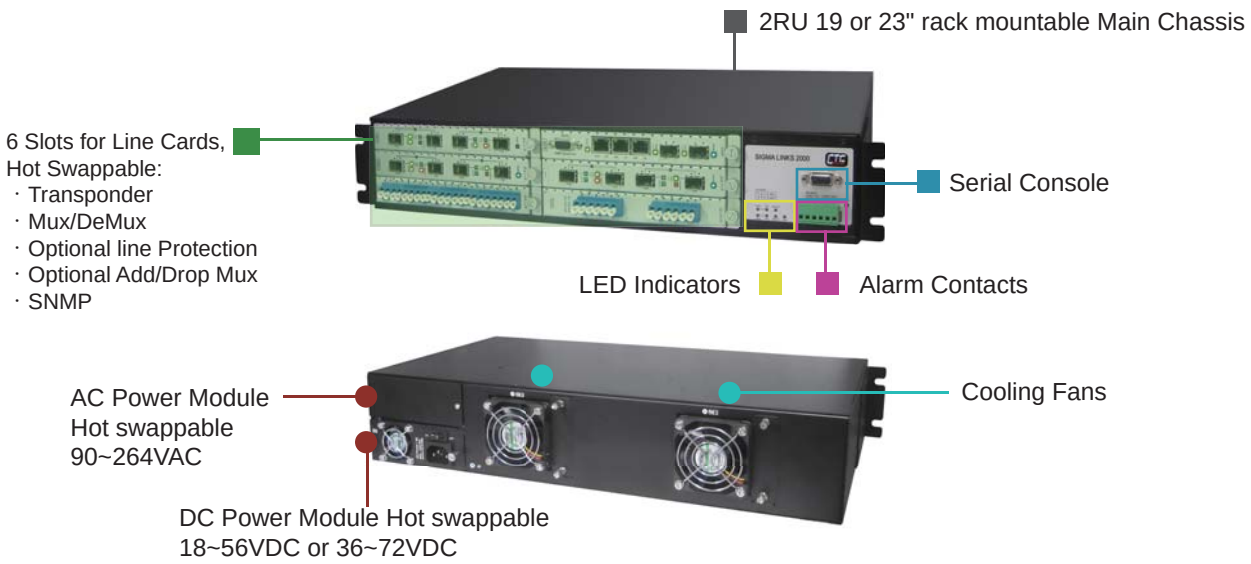

Power Redundancy

SML2000 chassis power supplies are hot swappable and modular, installing two into a chassis provides redundancy should a single power supply fail.

Cooling Fan

To further increase system reliability, the SML2000 chassis is fixed with two cooling fans on the rear of the chassis.

Network Management

The SML2000 chassis provides an SNMP card which can be installed into any slot of chassis. The SNMP card allows a network administrator with the ability to configure and monitor the status of the blades. Management can be achieved locally over RS232, or over the network by Telnet, Web or SNMP

Protocol Supported

The SML2000 chassis allows network administrators to deploy the chassis in a wide range of network. Technologies supported by the chassis included Transponder, Mux/Demux, Optical line Protection and Optical Add/Drop Mux (OADM)

CWDM 8- Service over dual fiber with Protection

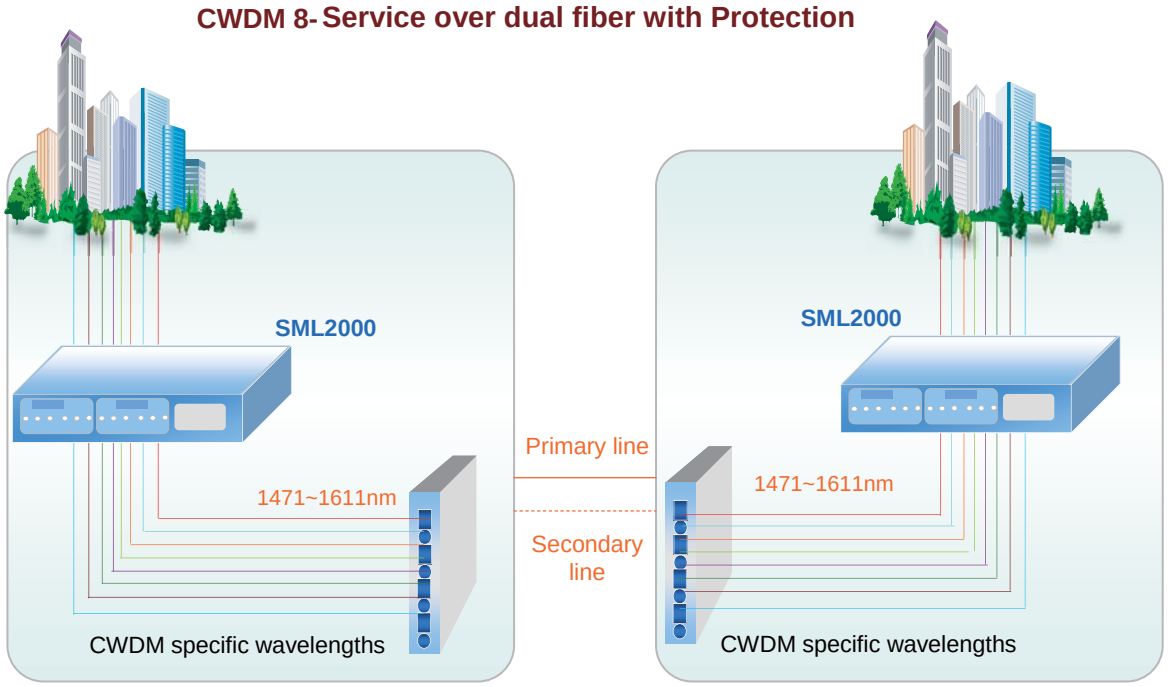

Ordering Information

SML-20-□□□□□ Chassis type

Chassis: 2U 6-Slot chassis
AC : 100 ~ 240V
DC24 : 18 ~ 36V
DC48 : 36 ~ 72V

Example: SML-20-Chassis

Network Management Controller

SML-SNMP

The SML-SNMP is the Network Management Controller card that can be placed in a compatible SML2000 or SML5000 chassis to provide network management functions. The management interface supports a local RS-232 serial console or remote TCPIP management by Telnet, HTTP or SNMP protocols.

The card is designed to be hot swapped so that it may be field replaced without affecting any online service of any other rack cards. The card also supports online firmware upgrade from TFTP server, using any user interface. Support for any standard NMS is provided by the included proprietary MIB file.

Features

- Communicated with CWDM Control Card by RS-485
- Management control to Mux/Demux card, Protection card and Transponder Card
- SNMP v1 Trap, MIB file
- 3 ports 10/100TX UTP ports plus 2 x100Mbps SFP slot
- Telnet access control
- Real-Time Clock feature
- TFTP SNMP F/W upgrade
- In chassis cascade mode, only chassis #0 SNMP card works, the other Chassis #1 to #5 SNMP cards are idle.

Electrical Interface	Console RS232 port 3x LAN 10/100Base-TX 2 x 100Base-FX SFP slot
Management Interface	· SNMP management: provide all system for Network management functions: software updates, and management system interaction through Ethernet port · Out-band management: supports Web, Telnet and SNMP management
Indications	PWR, LAN LNK/SPD
Dimensions	220 x 162 x 25mm (DxWxH)
Weight	900g
Temperature	0 ~ 50°C (Operating) -10 ~ 60°C (Storage)
Humidity	10 ~90% non-condensing
Certification	CE, FCC, LVD, RoHS
MTBF	65,000 hrs (25°C)

Web GUI Manager

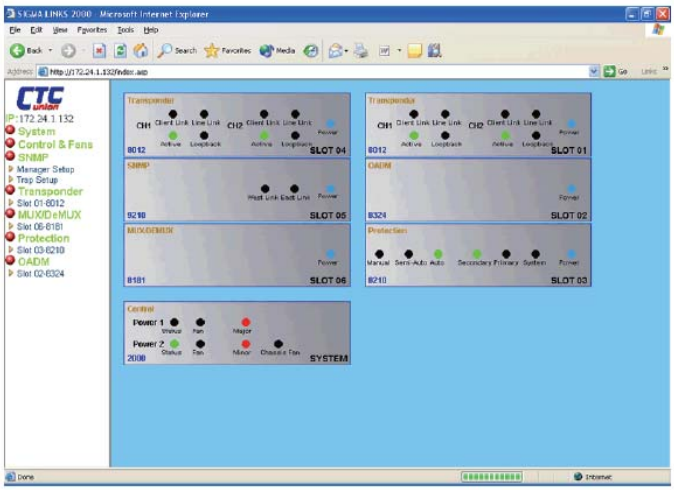

Console / Telnet Management

```
                    ******************************************
                    ***   CTC UNION TECHNOLOGIES CO., LTD  ***
                    ***  Sigma Links 5000 Console Ver 1.02 ***
                    ******************************************
                           CHASSIS ID : 00
SLOT #11 > 8210 Protection        [ Ver:0.02-0.0-0.1 ]

PRI Rx Power            SEC Rx Power            Working Path
 [ -62dBm ]              [ -62dBm ]                [ PRI ]

1 : Protect Mode [ AUTO    ]
2 : Detect Level [ -33dB ]
----------------------------------------
2 : Detect Level
 1. -5dB        6. -15dB        B. -25dB        G. -35dB
 2. -7dB        7. -17dB        C. -27dB
 3. -9dB        8. -19dB        D. -29dB
 4. -11dB       9. -21dB        E. -31dB
 5. -13dB       A. -23dB        F. -33dB

U. Firmware Upgrade.

Please select the items.   < ESC > to previous menu.
```

Ordering Information

SML- □□□□□ Optional card

50-SNMP : SML5000 SNMP card
20-SNMP : SML2000 SNMP card

Example: SML-50-SNMP

Preliminary

10G 3R Transponder

SML-10G

The SML-10G is a series of managed 10G fiber to fiber 3R repeater and transponders. Based on a number of 10 Gigabit Fiber standards, these transponders support XFP to XFP (XX), SFP+ to XFP (SX), or SFP+ to SFP+ (SS) fiber connections. The transponders are protocol transparent, providing 3R (Re-amplification, Re-shaping and Re-clocking) regeneration between these different optical module types. One of the major applications for this converter is in connecting proprietary transceiver equipment to CWDM or DWDM when these 'colored' optical modules are not available for the proprietary equipment. With full duplex wire speed forwarding capability between the 2 fiber media, the SML-10G brings you the best and simplest solution for your 10G conversion between fiber and fiber.

Features

- Multiple protocol supported 10G Ethernet, 10G FC, STM-64, OC-192
- Network management via Web, Telnet, SNMP in central SML-5000/ 2000 chassis
- Protocol transparent 3R fiber media transponder / repeater (Re-amplification, Re-shaping and Re-clocking)
- Promotes flexibility and eases management with pluggable SFP+ or XFP transceiver
- Features two 10G ports offering multiservice 10G transponder and regenerator function
- Provides superior optics capabilities resulting in extended transport distances for regional application.
- Extend 10G Ethernet transmission over fiber
- Useful as a 'Transponder' in CWDM or DWDM systems for 10G Ethernet/Fiber Channel/STM-64
- Supports Client / Line loop back tests

Optical Interface	Connector	SML-10G-SS LC, 1x Line SFP to 1x Client SFP+ SML-10G-XX LC, 1x Line XFP to 1x Client XFP SML-10GSX LC, 1x Line SFP+ to 1x Client XFP
	Traffic Format	OC-192/STM-64 10 Gigabit Ethernet LAN 10G FC (10.51875G) OTN G.709; OTU2 (10.709225G)
	Regeneration	Re-amplification Re-shaping Re-timing
	Loopback	Line / Client
	Cable type	SM 9/125um
	Wavelength	CWDM 1470 ~ 1610nm DWDM 1529.55 ~ 1565.50nm
Indications		LED (Power, Line Link, Client Link, Test, Loop back, Port Active, Alarm)
Power Consumption		<18W
Dimensions		220 x 162 x 25mm (D x W x H)
Weight		900g
Temperature		0 ~ 50°C (Operating), -10 ~ 70°C (Storage)
Humidity		10 ~90% non-condensing
Certification		CE, FCC, LVD, RoHS
MTBF		75,000 hrs (25°C)

Managed 10G 3R Transponder

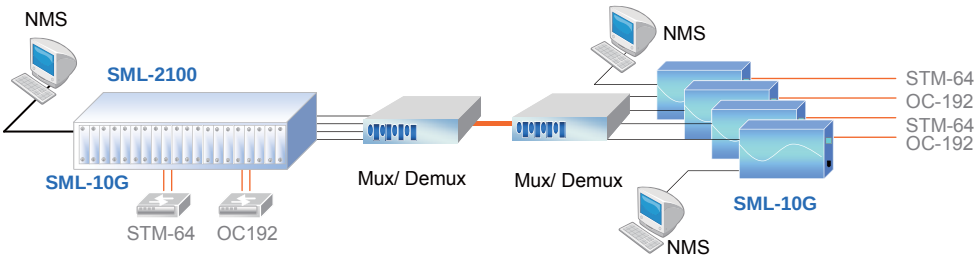

10G 3R Repeater

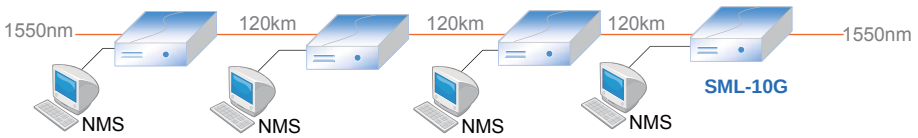

Ordering Information

SML-□□□□□ Model type

10G

Example: SML-10G

Preliminary

2.7G 3R Transponder

SML-2.7G

The SML-2.7G is an 2.7G 3R optical regeneration device, which consists of Re-amplification, Re-shaping and Re-timing. The transponder card converts a data signal to the correct wavelength for transmission on a specific channel by supporting SFP optics on both line side and client side interfaces. When the SML-2.7G card is placed in the SML rack with SNMP management, the management can view the converter card's status, type, version, fiber link status and alarms. The card can be configured to enable or disable the port, reset the port and set the desired data rate.

Features

- Multiple protocol supported at bit rates 28Mbps to 2.7Gbps (Fast Ethernet, Gigabit Ethernet, OC-3, OC-6, OC-12, OC-24, OC-48, STM-1, STM-4 STM-16, FC-1, FC-2)
- Network management via Web, Telnet, SNMP in central SML-5000/ 2000 chassis
- Local configuration via DB9 craft port In Stand-alone
- Digital Diagnostic monitoring of SFP module
- Perform optical repeater function (Re-amplification, Re-shaping, and Re-clocking)
- Facility loopback on both Client / Line sides
- Link Fault Pass through (LFP)
- Auto Laser Shutdown (ALS)
- Dip Switch setting data rate
- Detect fiber transmitter error Alarm

Optical Interface	Connector	SFP LC
	Data rate	28M to 2.7Gbps
	Duplex mode	Full duplex
	Fiber	MM 50/125μm, 62.5/125μm. SM 9/125μm
	Distance	MM 2km, SM 15/30/50/80/120km, WDM 20/40/60/80km
	Wavelength	MM 1310nm, SM 1310,1550nm WDM 1310Tx/1550Rx (type A) 1550Tx/1310Rx (type B) CWDM 1470 ~ 1610nm
Standard	IEEE 802.3, IEEE 802.3u	
Indications	LED (PWR, Line Link, Client Link, Test, Loop back, Port Active, Alarm)	
Power Input	Card : 12VDC Standalone : AC, DC options	
Power Consumption	< 10W	
Dimension	220 x 162 x 25mm (D x W x H)	
Weight	900g	
Temperature	0 ~ 50°C (Operating), -10 ~ 70°C (Storage)	
Humidity	10 ~ 90% non-condensing	
Certification	CE, FCC, LVD, RoHS	
MTBF	65,000 hrs (25°C)	

Managed 2.7G 3R Transponder

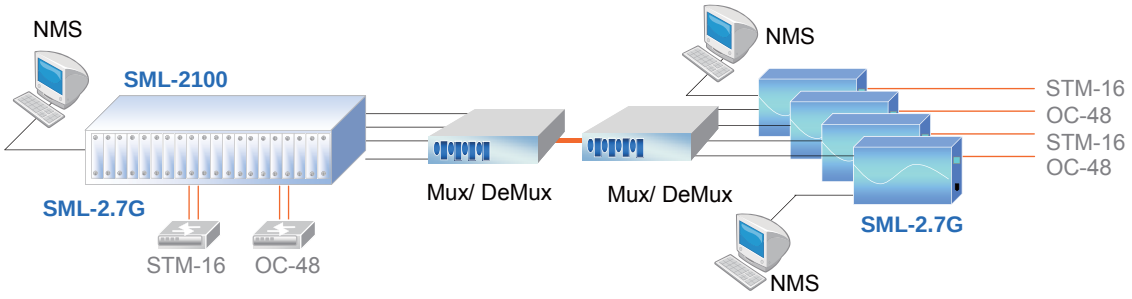

2.7G 3R Repeater

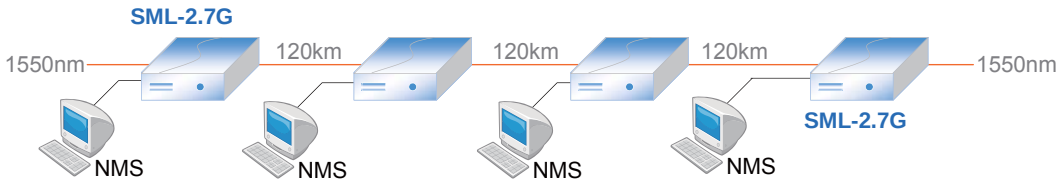

Ordering Information

SML-□□□□□ Model type

2.7G

Example: SML-2.7G

Dual Channel 1.25G/2.5G Transponder

SML-TR12
SML-TR22

The transponder card converts a data signal to the correct wavelength for transmission on a specific CWDM channel. By supporting SFP optics on both line side and client side interfaces, the transponder provides a truly flexible and easy to deploy solution for all applications. The transponder supports 2R regeneration, which consists of re-amplification and reshaping.

Features

- 2R regeneration (Re-amplification and reshaping)
- Line rate support from 100Mbps up to 2.5Gbps
- Client Side Wavelengths: 851/ 1311/ 1551nm
- Line Side CWDM Wavelengths: 1471/ 1491/ 1511/ 1531 / 1551/ 1571/ 1591/ 1611nm
- Optical Connector: SFP-LC (On both Line & Client Side)

Optical Interface :	Connector : SFP LC
	Data rate : 100Mbps, 1.25Gbps, 2.5Gbps
	Fiber : MM 62.2/125μm, 50/125μm.
	Distance : SM 9/125μm
	Wavelength : 850, 1311, 1471 ~ 1611nm
Indication	Power, Link(Line), Link(Client), TX/Act, Loopback
Power Input	12 VDC
Power Consumption	1channel <5W, 2 channel <10W
Dimensions	220 x 162 x 25mm(D x W x H)
Weight	900g
Temperature	0~50°C (Operating) ,0~70°C (Storage)
Humidity	10~90% non-condensing
Certification	CE, FCC, RoHS
MTBF	57,000 hours

CWDM 2-Service over dual fiber with Protection

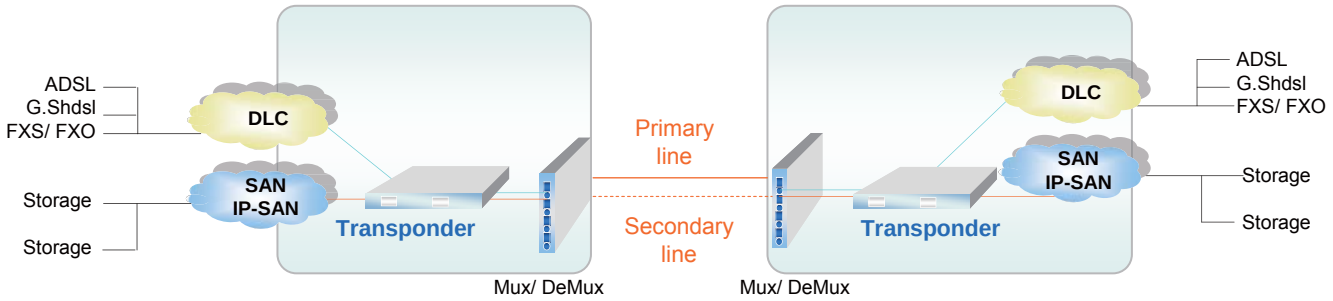

Ordering Information

SML- □□□□□ Model type

TR12 : 2 ch 1.25G Transponder
TR22 : 2 ch 2.5G Transponder

Example: SML-TR12

Optical Line Protection

SML-Protection

An optical protection unit is able to provide fiber path redundancy on a channel by channel basis. These units are particularly well suited for protection in fiber data transmission. The solution includes monitoring capabilities for both working and protection paths. The monitoring is available through the SNMP Management unit. In case of a fiber cut in the protecting path, traffic will be switched over to the protecting path in less than 50 ms.

Connecter	LC
LEDs	Power System, Working Path, Protection Path, Work mode
Power	DC 12V In
Restoration Time	50ms
Range	Input PWR :+3 ~ -15dBm(TX), -2~-29dBm(RX). Detection: -5 ~ -29dBm
Loss	Insertion Loss < 6.5dB, Return Loss > 45dB
Power Consumption	<10W
Dimensions (D x W x H)mm	220 x 162 x 25mm
Weight	900g
Temperature	0~50°C (Operating) ,20~70°C (Storage)
Humidity	10~90% non-condensing
Certification	CE, FCC, RoHS
MTBF	57,000 hours

Features

- 1+1 full optical protection
- Low channel cross talk < -55dB ; Low insertion loss < 6.5dB
- Latch feature, if power is lost the switch remains in its current state
- Protection transition < 50 ms
- Works with any combination of 1 ~16 wavelengths
- Traffic is switched in one of three modes :
  Auto, Semi-Auto, Manual
- Optical Interface Type : LC connectors
- Working and protected lines are physically separated fiber

CWDM 2-Service over dual fiber with Protection

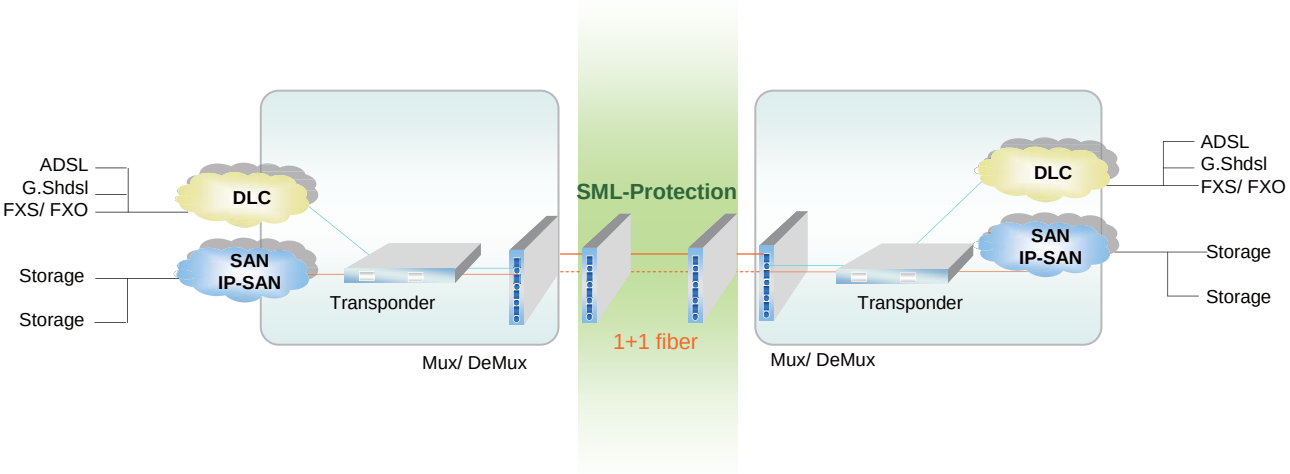

Ordering Information

SML- □□□□□ Model type

Protection : Fiber Protection card

Example: SML-Protection

9 and 5 Channel MUX/ DeMUX

SML-MD

Optical Mux/Demux (Multiplexer/Demultiplexer) cards are available in 5-channel or 9-channel models and are used to combine signals from 1-channel or 2-channel transponder cards on to a single pair of fiber. A 1311nm CWDM channel is accessible separately. The MUX/DEMUX cards provide the primary wave division and combination functions. Line side wave lengths require translation to client side equipment via the transponder card.

Features

- Two different CWDM Mux/ Demux are available:
  5 Ch (1531/1551/1571/1591/ + 1611nm)
  9 Ch (1471/1491/1511/1531/1551/1571/1591/1611 + 1311nm)
- Full native mode performance
- Optical connectors: LC connectors, SMF 9/ 125mm
- Optical input/ output monitoring port
- Passive model requires no power
- Protocol transparent, no limitation
- Utilizes industry standard ITU CWDM wavelengths

Connecter	LC
Standard	ITU-T G.694.2
Wavelength	SML-MD90 1311, 1471, 1491, 1511, 1531, 1551, 1571, 1591, 1611nm SML-MD50 1311, 1551, 1571, 1591, 1611nm
Insertion Loss	SML-MD90 < 3.5dB for CWDM wavelength SML-MD50 < 5.0dB for CWDM wavelength
Return Loss	> 45dB
Dimensions	220 x 162 x 25mm(DxWxH)
Weight	900g
Temperature	0~50°C (Operating) ,-10~70°C (Storage)
Humidity	10~90% non-condensing
Certification	CE, FCC, RoHS
MTBF	57,000 hours

CWDM Mux/DeMux Service

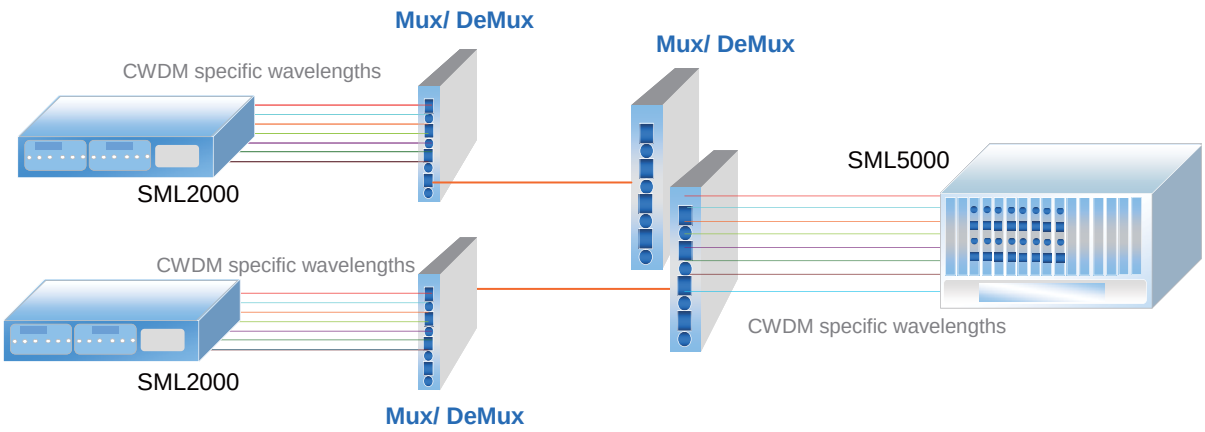

Ordering Information

SML-□□□□□ Model type

MD91
MD51

Example: SML-MD91

Optical Add-Drop Multiplexer

SML-OADM

An Optical Add/Drop Multiplexer takes a single wavelength from a trunk, pulls the signal out, and allows a new signal at the same wavelength to be inserted into the trunk at roughly the same spot. All the other wavelengths pass through the Add/Drop Multiplexer with only a small loss of power (usually < 0.5dB including connectors and adapters). An Optical Add/Drop Multiplexer (OADM) is available allowing a single wavelength to be dropped or added at specific sites in linear Add/Drop topology.

Features

- Single Add/Drop Channel
- Operating channel : 1311,1471,1491,1511,1531,1551,1571, 1591,1611nm
- Passive optical module, no power required
- Protocol transparent, no limitation
- Utilizes Industry standard ITU CWDM wavelengths
- Optical connectors : LC

Connecter	LC
Indication	Power System, Working Path, Protection Path, Work mode
Power Input	12VDC
Restoration Time	50ms
Range	Input PWR :+3 ~ -15dBm(TX), -2~-29dBm(RX). Detection: -5 ~ -29dBm
Loss	Insertion Loss < 6.5dB, Return Loss > 45dB
Power Consumption	<10W
Dimensions	220 x 162 x 25mm(DxWxH)
Weight	900g
Temperature	0~50°C (Operating) ,-10~70°C (Storage)
Humidity	10~90% non-condensing
Certification	CE, FCC, RoHS
MTBF	57,000 hours

CWDM Add Drop Multiplexer

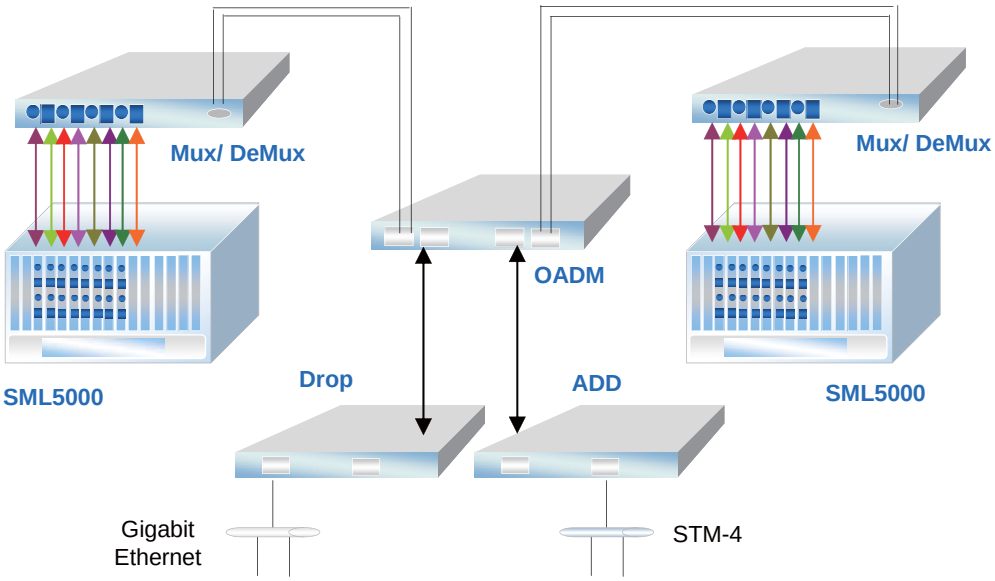

Ordering Information

SML-□□□□□ Model type

OADM

Example: SML-OADM

CWDM Managed Transponder Platform

SML-2100

The SML2100 is a 2U high 19" Rack, 20-slot modular CWDM transponder rack. It provides an economic solution in high density 3R Transponder installations in enterprises or central offices. All critical components, Power, fans, management module and interface cards are hot swappable, allowing online field replacement. The hot-swappable power modules can be chosen from AC100-240V, DC18-36. or DC 36-72V. The chassis also has a pair of alarm relays and is able to stack up to 10 chassis as one management unit. A number of cards are available that support different protocols including 10G and 2.7G 3R Transponders.

Features

- 20-slot transponder chassis
- Single or optional redundant power supplies
- Hot swappable fan, power, cards and SNMP modules
- Chassis cascade up to 10 with one IP management
- Chassis backplane consists of passive components
- 19" Requires only 2RU of rack space
- 19" rack-mountable

Connectors

Console RS-232
LAN 10/100 Base TX RJ45

Physical Specifications

Dimensions: 303mm x 438mm x 88mm (W x D x H)
Weight: 5.2kg w/o P/S

Power Characteristics

AC input : 100 ~ 240VAC
DC Input : 24VDC, 48 VDC, 72VDC

Environmental Specifications

Operating -10°C ~ 60°C
Storage -20°C ~ 70°C
Relative humidity 5% ~ 90% non-condensing
Predicted MTBF : 65,000 hrs

Certification

FCC class A, VCCI class A, CE, RoHS

20-slot Transponder Platform

Technologies Supported:

- 10G 3R Transponder
- 2.7G 3R Transponder
- 2.7G 3R Transponder with Protection

Chassis backplane consists of passive components

Chassis cascade up to 10 with one IP management

Hot swappable Thermal fans

Two Alarm relays

Single or optional redundant power supplies

Power Redundancy

All the SML2100 chassis power supplies are hot swappable and modular, installing two into a chassis provides redundancy should a single power supply fail. A fully loaded chassis can run continuously with only one power module fitted into the chassis.

Intelligent Cooling Fan

To further increase system reliability, the SML2100 chassis is fitted with two hot swappable fan modules. Both fan modules can be easily removed from the rear of the chassis, without interruption to the operation of the line cards. A fully loaded chassis can run continuously with only one fan module fitted into the chassis.

Chassis cascade

The SML2100 features cascadeable management which allows managing a stack (up to 10 chassis) from a single IP address. Chassis are interconnected with standard UTP cables that carry control signals. Each chassis has its own ID, starting with the master chassis ID0 and cascading up to ID9.

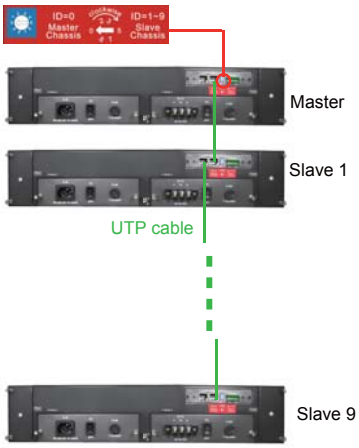

10 chassis cascade with one IP management

Network Management

The SML2100 chassis provides an NMC (Network Management Controller) card which must be installed into the first slot of chassis. The NMC card allows a network administrator with the ability to configure and monitor the status of the blades. Management can be achieved locally over RS232, or over the network by Telnet, Web or SNMP.

Protocol Supported

The SML2100 chassis has been designed as a CWDM Managed platform. This allows network administrators to deploy the chassis in a wide range of DWDM, CWDM network. Technologies supported by the chassis included 10G 3R Transponder and 2.7G 3R Transponder.

Ordering Information

SML-2100-□□□□□ Chassis type

CH : 2U 20-Slot Chassis
AC : 100 ~ 240V
DC24 : 18 ~ 36V
DC48 : 36 ~ 72V

Example: SML-2100-CH

Network Management Controller
SML-21-SNMP

The SML-21-SNMP is a Network Management Controller card that can be placed in a compatible SML-2100 series chassis to provide network management functions. The management interface supports a local RS-232 serial console or remote TCP/IP management by Telnet, HTTP or SNMP protocols. The card is designed to be hot swapped so that it may be field replaced without affecting any online service of any other rack cards. The card also supports online firmware upgrade from TFTP server, using any user interface.Support for any standard NMS is provided by the included proprietary MIB file.

CTC Union also provides and maintains their own EMS (Element Management System) which is a Java based client/server manager for monitoring and maintaining a large number of network elements over a long period of time.

Electrical Interface	• Console RS232 port • LAN 10/100Base-TX
Management Interface	• Provide all system Network management functions: software updates, and management system interaction through Ethernet port. • Out-band management: supports Web, Telnet and SNMP , EMS management • Configuration Management • Performance Management • Fault Management • Status Monitoring.
Indications	• PWR, Fan, Alarm Act, STK, LAN LNK/SPD
Dimensions	• 155 x 88 x 23mm (DxWxH)
Weight	• 120g
Temperature	• 0 ~ 50oC (Operating) , -10 ~ 60oC (Storage)
Humidity	• 10 ~90% non-condensing
Certification	• CE, FCC, LVD, RoHS
MTBF	• 65,000 hrs (25oC)

Features

- Supports local / remote monitor and configuration.
  Supports local / remote online TFTP f/w upgrade
- Fiber transceiver status & info display
- Supports multiple accesses for SNMP management
- Supports Web GUI management, Telnet, Serial console
  Supports console RS-232 port and 10/100Base-T Ethernet port
- Supports SNMP standard MIB II and proprietary MIB
  Supports NTP time synchronization
- Supports 100 entries system log

Serial Console Management

```
                    ****************************************
                    *** CTC UNION TECHNOLOGIES CO., LTD. ***
                    *** SML-21 SNMC             VER. 1.95 ***
                    ****************************************
This Chassis ID:[00]  Cascaded:[Yes]    Monitored Chassis ID:[00]
Chassis List:[Master]
    #0:[X] #1:[ ] #2:[ ] #3:[ ] #4:[ ] #5:[ ] #6:[ ] #7:[ ] #8:[ ] #9:[ ]
<1>:SLOT #01 > SML-21-10S-SS          <B>:SLOT #11 > SML-21-10S-SS
<2>:SLOT #02 > SML-21-10S-XX          <C>:SLOT #12 > SML-21-10S-SS
<3>:SLOT #03 > SML-21-2.7G-2S         <D>:SLOT #13 > SML-21-10S-SS
<4>:SLOT #04 > SML-21-2.7G-2S         <E>:SLOT #14 > SML-21-10S-SS
<5>:SLOT #05 > SML-21-2.7G-2S         <F>:SLOT #15 > SML-21-10S-SS
<6>:SLOT #06 > SML-21-2.7G-2S         <G>:SLOT #16 > SML-21-10S-SS
<7>:SLOT #07 > SML-21-2.7G-2S         <H>:SLOT #17 > SML-21-10S-SS
<8>:SLOT #08 > SML-21-2.7G-3S         <I>:SLOT #18 > SML-21-10S-SS
<9>:SLOT #09 > SML-21-2.7G-3S         <J>:SLOT #19 > SML-21-10S-SS
<A>:SLOT #10 > SML-21-2.7G-3S         <K>:SLOT #20 > SML-21-10S-SS
<->:Monitor Previous Chassis          <+>:Monitor Next Chassis
<L>:SNMP System Configuration Setup
<M>:SNMP Manager Configuration Setup
<P>:Password Setup
<R>:Reboot            <Z>:Logout
Please select an item
```

Web GUI Manager

Element Manager System

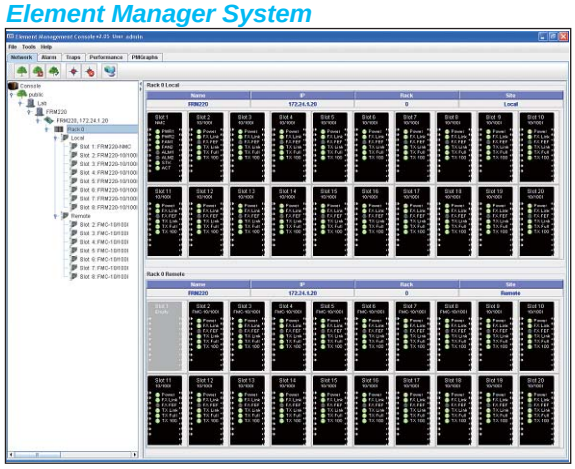

10G 3R Transponder
SML-21-10G

The SML-21-10G is a series of managed 10G fiber to fiber 3R repeater and transponders. Based on a number of 10 Gigabit Fiber standards, these transponders support XFP to XFP (XX), SFP+ to XFP (SX), or SFP+ to SFP+ (SS) fiber connections. The transponders are protocol transparent, providing 3R (Re-amplification, Re-shaping and Re-clocking) regeneration between these different optical module types. One of the major applications for this converter is in connecting proprietary transceiver equipment to CWDM or DWDM when these 'colored' optical modules are not available for the proprietary equipment. With full duplex wire speed forwarding capability between the 2 fiber media, the SML-21-10G brings you the best and simplest solution for your 10G conversion between fiber and fiber.

Features

- Multiple protocol supported 10G Ethernet, 10G FC, STM-64, OC-192
- Network management via Web, Telnet, SNMP in central SML-2100 chassis
- Protocol transparent 3R fiber media transponder / repeater (Re-amplification, Re-shaping and Re-clocking)
- Promotes flexibility and eases management with pluggable SFP+ or XFP transceiver
- Features two 10G ports offering multiservice 10G transponder and regenerator function
- Provides superior optics capabilities resulting in extended transport distances for regional application.
- Extend 10G Ethernet transmission over fiber
- Useful as a 'Transponder' in CWDM or DWDM systems for 10G Ethernet/Fiber Channel/STM-64
- Supports Client / Line loop back tests
- Serial console for stand-alone management When inserted in CH02M Single Slot Chassis

Optical Interface	Connector	SML-21-10G-SS LC, 1x Line SFP to 1x Client SFP+ SML-21-10G-XX LC, 1x Line XFP to 1x Client XFP SML-21-10GSX LC, 1x Line SFP+ to 1x Client XFP
	Traffic Format	OC-192/STM-64 10 Gigabit Ethernet LAN 10G FC (10.51875G) OTN G.709; OTU2 (10.709225G)
	Regeneration	Re-amplification Re-shaping Re-timing
	Loopback	Line / Client
	Cable type	SM 9/125um
	Wavelength	CWDM 1470 ~ 1610nm DWDM 1529.55 ~ 1565.50nm
Indications		LED (Power, Line Link, Client Link, Test, Loop back, Port Active, Alarm)
Power Consumption		<18W
Dimensions		155 x 88 x 23mm (D x W x H)
Weight		150g
Temperature		0 ~ 50°C (Operating), -10 ~ 70°C (Storage)
Humidity		10 ~90% non-condensing
Certification		CE, FCC, LVD, RoHS
MTBF		75,000 hrs (25°C)

Managed 10G 3R Transponder

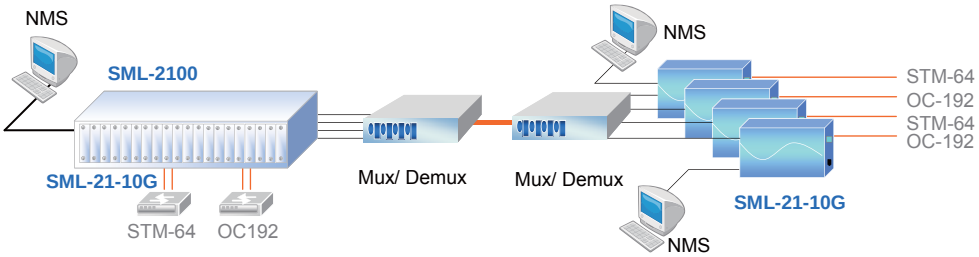

10G 3R Repeater

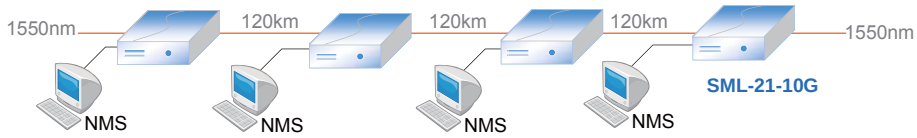

Ordering Information

SML-21-□□□□□ Model type

10G

Example: SML-21-10G

2.7G 3R Transponder

SML-21-2.7G-2S

The SML-21-2.7G-2S is an 2.7G 3R optical regeneration device, which consists of Re-amplification, Re-shaping and Re-timing. The transponder card converts a data signal to the correct wavelength for transmission on a specific channel by supporting SFP optics on both line side and client side interfaces. When the SML-21-2.7G-2S card is placed in the SML rack with SNMP management, the management can view the converter card's status, type, version, fiber link status and alarms. The card can be configured to enable or disable the port, reset the port and set the desired data rate.

Features

- Multiple protocol supported at bit rates 28Mbps to 2.7Gbps (Fast Ethernet, Gigabit Ethernet, OC-3, OC-6, OC-12, OC-24, OC-48, STM-1, STM-4 STM-16, FC-1, FC-2)
- Network management via Web, Telnet, SNMP in central SML chassis
- Local configuration via DB9 craft port In Stand-alone
- Digital Diagnostic monitoring of SFP module
- Perform optical repeater function (Re-amplification, Re-shaping, and Re-clocking)
- Facility loopback on both Client / Line sides
- Link Fault Pass through (LFP)
- Auto Laser Shutdown (ALS)
- Dip Switch setting data rate
- Detect fiber transmitter error Alarm

Optical Interface	Connector	SFP LC
	Data rate	28M to 2.7Gbps
	Duplex mode	Full duplex
	Fiber	MM 50/125μm, 62.5/125μm. SM 9/125μm
	Distance	MM 2km, SM 15/30/50/80/120km, WDM 20/40/60/80km
	Wavelength	MM 1310nm, SM 1310,1550nm WDM 1310Tx/1550Rx (type A) 1550Tx/1310Rx (type B) CWDM 1470 ~ 1610nm
Standard	IEEE 802.3, IEEE 802.3u	
Indications	LED (PWR, Line Link, Client Link, Test, Loop back, Port Active, Alarm)	
Power Input	Card : 12VDC Standalone : AC, DC options	
Power Consumption	< 10W	
Dimension	155 x 88 x 23mm (D x W x H)	
Weight	120g	
Temperature	0 ~ 50°C (Operating), -10 ~ 70°C (Storage)	
Humidity	10 ~ 90% non-condensing	
Certification	CE, FCC, LVD, RoHS	
MTBF	65,000 hrs (25°C)	

Managed 2.7G 3R Transponder

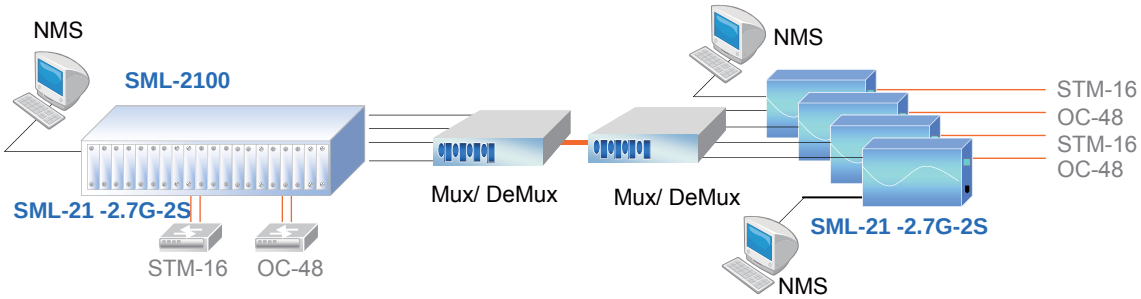

2.7G 3R Repeater

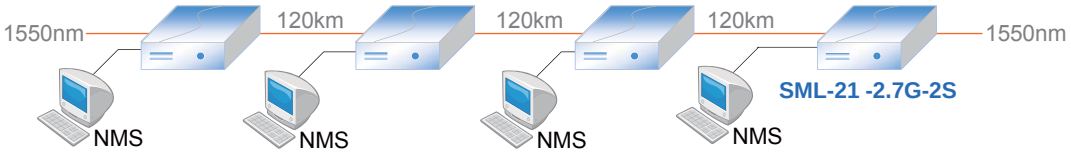

SML-21-2.7G-2S can be inserted CH02M, CH02N and CH20 chassis.

Ordering Information

SML-21-□□□□□ Optional card

2.7G-2S

Example: SML-21-2.7G-2S

3R 2.7G Transponder

SML-21-2.7G-3S

The SML-21-2.7G-3S is an 3R 2.7G optical regeneration device, which consists of Re-amplification, Re-shaping and Re-timing. The transponder card converts a data signal to the correct wavelength for transmission on a specific channel by supporting SFP optics on both line side and client side interfaces. 1+1 Automatic optical line Protection Switching are supported for the aggregate fiber ports. When the SML-21-2.7G-3S card is placed in the SML rack with SNMP management, the management can view the converter card's status, type, version, fiber link status and alarms. The card can be configured to enable or disable the port, reset the port and set the desired data rate.

Features

- Multiple protocol supported at bit rates 28Mbps to 2.7Gbps (Fast Ethernet, Gigabit Ethernet, OC-3, OC-6, OC-12, OC-24, OC-48, STM-1, STM-4 STM-16, FC-1, FC-2)
- Network management via Web, Telnet, SNMP in central SML chassis
- Local configuration via DB9 craft port In Stand-alone
- Digital Diagnostic monitoring of SFP module
- Perform optical repeater function (Re-amplification, Re-shaping, and Re-clocking)
- Facility loopback on both Client / Line sides
- 1+1 Optic fiber protection
- Link Fault Pass through (LFP)
- Auto Laser Shutdown (ALS)
- Dip Switch setting data rate
- Detect fiber transmitter error Alarm

Optical Interface	Connector	SFP LC
	Data rate	28M to 2.7Gbps
	Regeneration	Re-amplification Re-shaping Re-clocking
	Loop back	Line/Client
	Fiber	MM 62.2/125μm, 50/125μm. SM 9/125μm
	Wavelength	MM 850, 1310nm SM 1310, 1550nm WDM 1310T/1550R, 1550T/1310R CWDM 1470 ~ 1610nm
Indications		LED (PWR, Line Link, Client Link, Test, Loop back, Port Active, Alarm)
Power Consumption		< 10W
Dimensions		155 x 88 x 23mm (D x W x H)
Weight		120g
Temperature		0 ~ 50°C (Operating), -10 ~ 70°C (Storage)
Humidity		10~90% non-condensing
Certification		CE, FCC, LVD, RoHS
MTBF		65,000 hrs (25°C)

Managed 2.7G 3R Transponder with Fiber Redundant

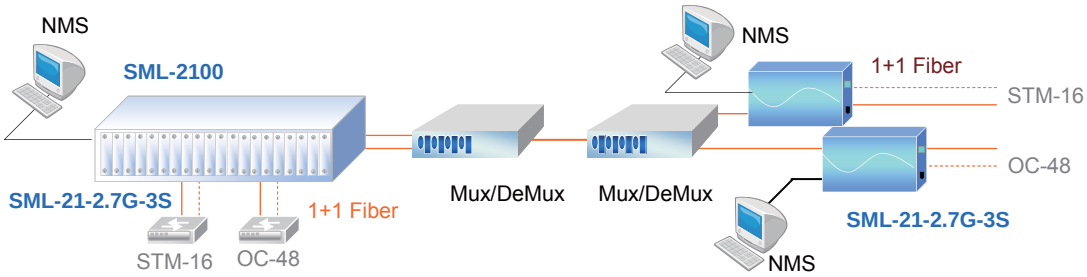

2.7G 3R Repeater

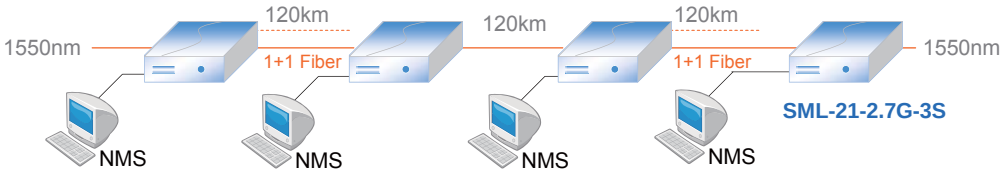

Ordering Information

SML-21-□□□□□ Optional card

2.7G-3S

Example: SML-21-2.7G-3S

4 Channel Transponder Platform
SML-1000

The SML-1000 is a multi-rate transponder platform (up to 2.5G transponder) that provides the capability to transport a wide variety of service types from 155 Mbps to 2.48 Gbps, including services such as ESCON, SONET OC-3 through OC-48, SDH STM-1 through STM-16, Gigabit Ethernet, 1-or 2-Gbps Fiber Channel over a 100-GHz, ITU-compliant wavelength. The 2.5G transponder card architecture contains a single client interface that is mapped to a single-line CWDM interface, without accessing any cross-connect fabric.

The interface to the client is via a variety of Small Form-Factor Pluggable (SFP) optics modules, enabling a wide service mix and different fiber types (single- and multimode), wavelengths (850 and 1310 nm), and fiber reach (short reach/intra-office, intermediate reach/long haul, etc.). The SFP optical modules are equipped with LC connectors to enable high-density placement.

Features

- 1U 19” 4Ch Transponder Rack
- R2R regeneration (Re-amplification and reshaping)
- Line rate support from 100Mbps up to 2.5Gbps
- Client Side Wavelength: 850/ 1310/ 1550nm
- Line Side CWDM Wavelength 1471/ 1491/ 1511/
- 1531 / 1551/ 1571/ 1591/ 1611nm
- optical Connector: SFP-LC (On both Line & Client Side)

Connectors

SFP-LC (Line Side)

SFP-LC (Client Side)

Physical Specifications

Dimensions: 265 x 440 x 43mm (W x D x H)

Weight: 3.2kg w/o P/S

Power Characteristics

AC input: 100 ~ 240V AC

DC input: 48VDC, 72VDC

Environmental Specifications

Operating: 0°C to 50°C

Storage: -10°C to 70°C

Relative humidity: 5% to 90% non-condensing

Predicted MTBF : 65,000 hrs (25°C)

Certification

FCC , CE, RoHS

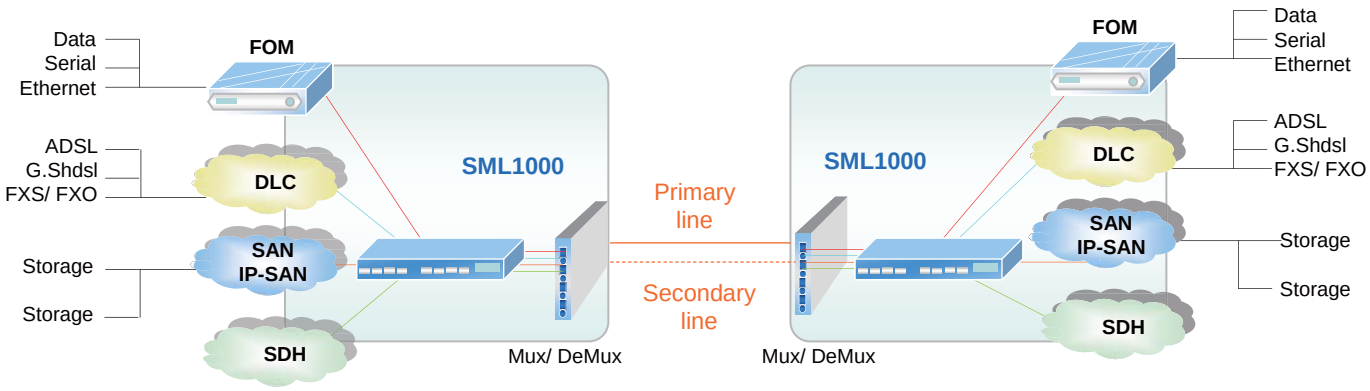

Ordering Information

SML-1000-CH-□□□□□ Power type

AC : 100 ~ 240V

DC24 : 18 ~ 36V

DC48 : 36 ~ 72V

Example: SML-1000-CH-AC

4U 24-Slot MUX/DeMux Passive Rack
SML-4000

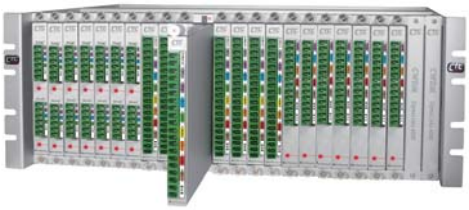

SML-4000 is a 4U 19-inch CWDM passive rack that features 24 cards capacity and supports SML-40-8181-L , 8+1 channels MUX/DEMUX cards. The 8+1 channels MUX/DEMUX card is a modular design for CWDM wavelengths including 1471nm, 1491nm, 1511nm, 1531nm, 1551nm, 1571nm, 1591nm, and 1611nm. The 1311nm CWDM channel is accessible separately. The MUX/DEMUX cards provide the primary wave division and combination functions for CWDM. Line side wave lengths require translation to client side equipment via a transponder card. The unique design makes the SML-4000 one of the highest density CWDM solutions in the industry.

Features

- 24-Slots for MUX/DEMUX card
- 4U, 19-inch Rack Mount
- Passive model requires on power
- Plug & Play Operation
- Optical connectors: LC connectors, SMF 9/ 125um
- Protocol transparent, no limitation
- Utilizes industry standard ITU-T CWDM wavelengths

Connectors

LC

Physical Specifications

Dimensions:

4U passive chassis : 277 x 481 x 177 mm

Mux/ Demux card : 260 x 240 x 18.2 mm(D x W x H)

Environmental Specifications

Operating 0°C to 50°C

Storage 0°C to 70°C

Relative humidity 5% to 90% non-condensing

Certification

RoHS

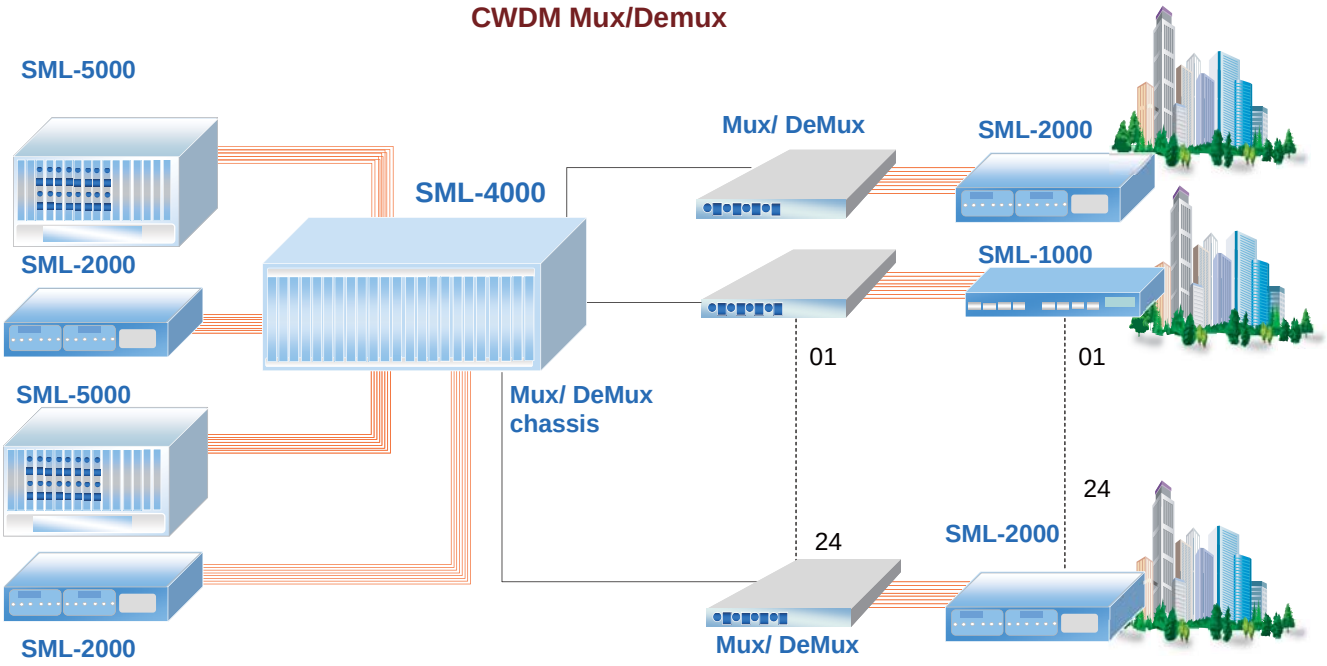

Ordering Information

SML-40-□□□□□ Optional card

MD80
MD81
MD51
2MD40-1

Example: SML-40-MD80

SML-40-□□□□□ Chassis type

CH : 4U 24-Slot Chassis

Example: SML-40-CH

CWDM Mux/Demux card for SML4000

SML-40-MD

The SML-40-MD80 is 8 channels MUX/DEMUX, modular design card for CWDM wavelengths including 1471nm, 1491nm, 1511nm, 1531nm, 1551nm, 1571nm, 1591nm, 1611nm. The SML-40-MD81 is 8 channels MUX/DEMUX, modular design card with monitor port. The SML-40-MD51 is 5 channels MUX/DEMUX, modular design card for CWDM wavelengths including 1491nm, 1511nm, 1571nm, 1591nm, 1611nm. The SML-40-MD40 is a dual 4 channels Mux/Demux card, wavelength included 1471, 1491, 1551, 1531nm. The MUX/DEMUX cards provide the primary wave division and combination functions for CWDM. Line side wave lengths require translation to client side equipment via a transponder card.

Features

- Full native mode performance
- Optical connectors : LC connectors, SMF 9/125um
- Optical Input/Output monitor port
- Passive model requires no power
- Protocol transparent, no limitation
- Utilizes industry standard ITU CWDM wavelength

Connector	LC
Standard	ITU-T G.694.2
Wavelength	1311,1471,1491,1511,1531,1551, 1571,1591,1611nm
Insertion Loss	< 3.5dB for CWDM wavelength
Return Loss	>45dB
Dimensions	260 x 240 x 18.2mm (D x W x H)
Weight	600g
Temperature	0 ~ 50 °C (Operating) -10 ~ 70 °C (Storage)
Humidity	10 ~90% non-condensing
Certification	CE, FCC, RoHS
MTBF	75,000 hours

CWDM Mux/Demux

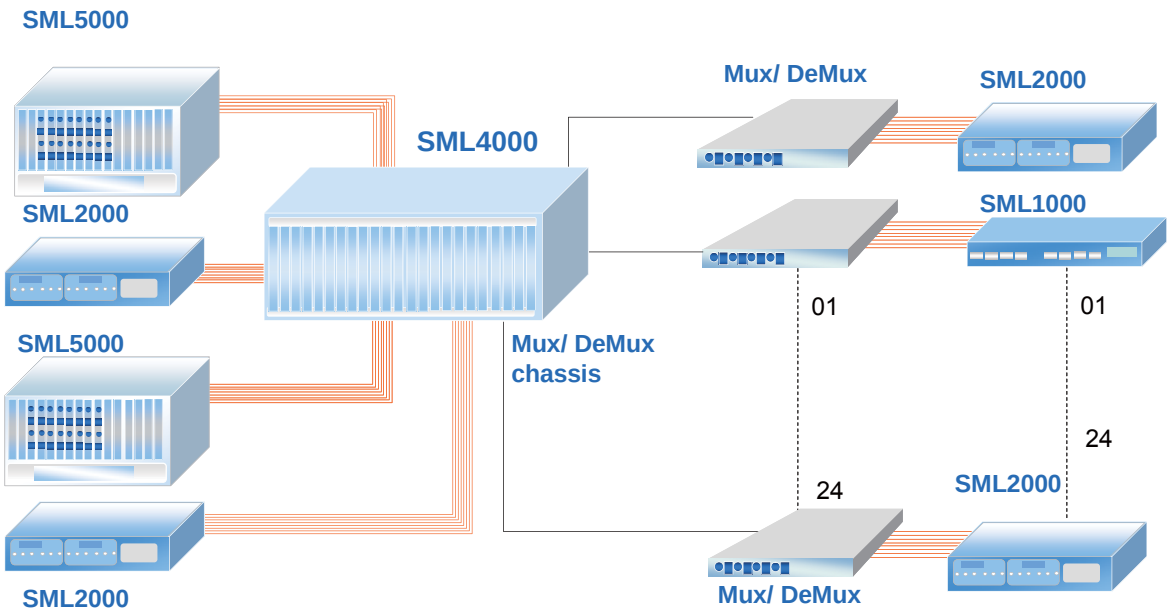

Ordering Information

SML-40-□□□□□ Optional card

MD80
MD81
MD51

Example: SML-40-MD80

CWDM Dual 4 Channel Mux/Demux card for SML4000

SML-40-2MD40-1

The SML-40-2MD40-1 is dual 4 channels MUX/DEMUX, modular design card for CWDM wavelengths including 1471nm, 1491nm, 1511nm, 1531nm. The SML-40-2MD40-1 MUX/DEMUX cards provide the primary wave division and combination functions for CWDM. Line side wave lengths require translation to client side equipment via a transponder card. The unique design makes the SML-4000 one of the highest density CWDM solutions in the industry. the industry.

Features

- Full native mode performance
- Optical connectors : LC connectors, SMF 9/125um
- Optical Input/Output monitor port
- Passive model requires no power
- Protocol transparent, no limitation
- Utilizes industry standard ITU CWDM wavelength

Connector	LC
Standard	ITU-T G.694.2
Wavelength	1311,1471,1491,1511,1531nm
Insertion Loss	< 3.5dB for CWDM wavelength
Return Loss	>45dB
Dimensions	260 x 240 x 18.2mm (D x W x H)
Weight	600g
Temperature	0 ~ 50 °C (Operating)
	-10 ~ 70 °C (Storage)
Humidity	10 ~90% non-condensing
Certification	CE, FCC, RoHS
MTBF	75,000 hours

2Ch Single Core MUX/DEMUX

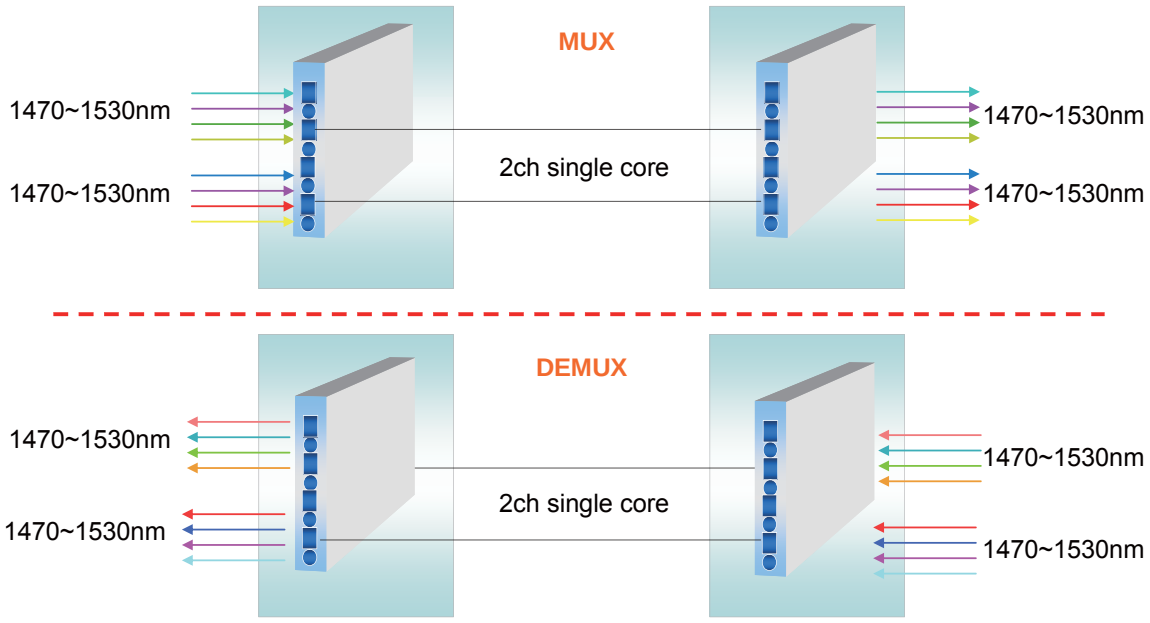

Ordering Information

SML-40-□□□□□ Optional card

2MD40-1

Example: SML-40-2MD40-1

4 Channel E1/ T1 Multiplexer
FMUX04

The FMUX04 is a 1U half 19" stand-alone or rack mountable point-to-point multiplexer for 4*E1 or 4*T1 (selectable) transmissions over a single fiber optic link. Its half-rack format makes it ideal for low cost multiplexing applications that require up to 4-channel. All channels provide completely transparent transmission of E1 or T1 regardless of frame mode, clock source or timeslot assignment. Available in either AC or DC models, the AC supplies operate from 100~240VAC while DC supplies operate from 18~72VDC. A wide range of transceiver selection provides fiber connection with SC, FC or ST type connectors in multimode or single mode and at distance from 2 to 120km as well as BiDi (single fiber) at distances of 20, 40, 60, or 80km. Additional options include "Order Wire" phone connection (FXS port) and a SNMP management.

Features

- 1U stand-alone unit
- Channel service setting and remote loop-back setting via front panel DIP switch or serial console
- Far End Fault (FEF) on fiber link, selectable
- On-line Bit Error Rate monitor feature with four error-rate classes
- Dual color LEDs indicators
- Optional dedicated Order Wire phone port (FXS, RJ-11 port)
- Console port and one alarm relay
- Optional SNMP management, Telnet, and Web Based local and remote configuration

Optical Interface	Connector :	1x9 (SC, ST, FC)
	Data rate :	38Mbps
	Bit Error Rate :	Less than 10^{-11}
	Fiber :	MM 62.2/125□m, 50/125□m. SM 9/125□m
	Distance:	MM 2km, SM 15/30/50/80/120km, WDM 20/40/60/80km
	Wavelength :	1310, 1550nm
Electrical Interface :	Console :	RS232 (DB9F) Async
	SNMP :	RJ45
	Order wire :	RJ11
	E1 :	BNC 75 Ω, RJ45 120 Ω
		T1 RJ45 100 Ω, 100 metersΩ
Standard		E1:ITU-T, T1:ITU-T, AT&T, ANSI
Indication		PWR, Alarm, Far End /Near End Error, System failure, E1/T1 status
Power input		AC : 100 ~240V
		DC24 : 18 ~ 36V, DC48 : 36 ~ 72V
Power Consumption		< 20W
Dimensions		235 x 195 x 45mm(DxWxH)
Weight		850g
Temperature		0~50°C (Operating) ,0~70°C (Storage)
Humidity		10~90% non-condensing
Certification		CE, FCC, RoHS
MTBF		57350 hours

Managed 4E1 Fiber Optical Multiplexer

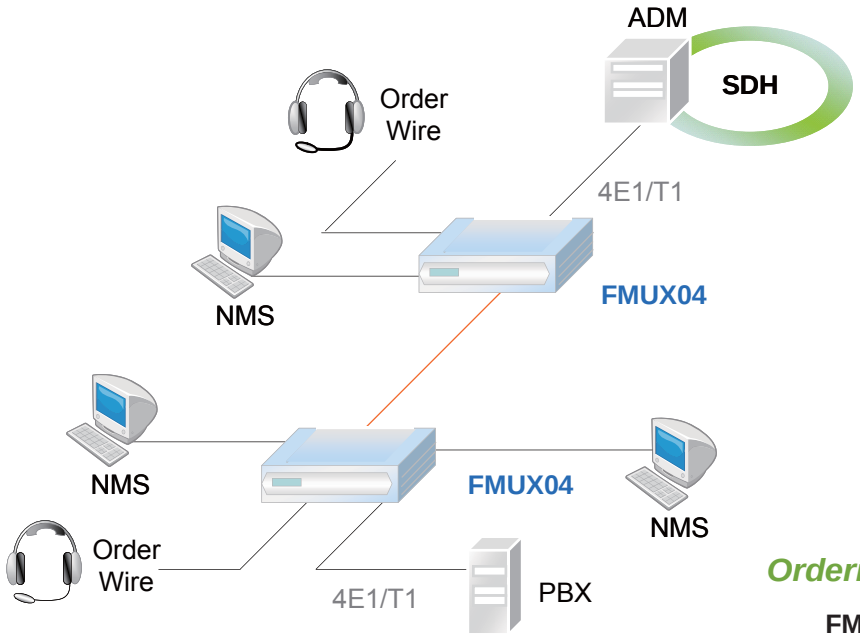

Ordering Information

FMUX □□□□□ Model type
04

Example: FMUX04

Gigabit Fiber Optic Multiplexer

FMUX1000S

FMUX1000S is an innovated gigabit multi-service fiber optic transport system which can transmit both E1/T1 and Ethernet data streams over redundant gigabit fiber optic links. The gigabit wire-speed Ethernet traffic and a separated 16 E1/T1 transparent data are multiplexed into 1.25Gbps by using a patented physical coding method to achieve a high performance and economic broadband access solution.

The FMUX1000S can be adopted as a broadband backhaul of 3G mobile networks or private network access for campus and office building. FMUX1000S is a modular design which supports E1/T1 and combo Ethernet interface cards. There are 4 hot swappable tributary slots equipped for each FMUX1000S system. The Ethernet tributary card is equipped with two 10/100/1000 RJ45 and two Gigabit SFP fiber ports, These 4 ports are part of 4 gigabit ports in an Ethernet switch core. For E1/T1 card, the 4 E1/T1 ports can be programmed as either E1 or T1 individually. Any combination of Ethernet and E1/T1 cards can be placed in the four plug-in slots.

Features

- Wire-speed GbE traffic and separated 16E1 data are transmitted simultaneously
- 1Gbps throughput for aggregate Ethernet traffic
- Supports advanced Ethernet interface features like jumbo frame size(9K bytes), Provider Ethernet bridge by VLAN stacking (QinQ, IEEE802.1ad), QoS and traffic rate control
- Supports various loopback and BERT for system diagnosis
- 1+1 protection switch and Automatic Laser Shutdown[ALS] for aggregate fiber interfaces
- Built-in EOC channel for OAM&P
- Supports VT100, Telnet, SNMP and client server based NMS interfaces
- Loss of Power indication for power failure of the remote unit
- Remote software upgradable
- Supports order-wire for craft person's voice communication
- Supports one RS-232 Async. channel for auxiliary data communication
- AC and DC power redundancy
- Form C relay contacts for audible and visible alarm outputs
- Comply with the specifications of class A of CISPR 22 and class A of FCC Part 15 Subpart B Rules of U.S.A
- Comply with the electrostatic discharge immunity (ESD) IEC 61000-4-2 level 2
- RoHS Compliant

System

System capacity

Any combination of E1/T1 and Combo Ethernet cards for 4 x hot swappable tributary plug-in slots. E1/T1 4ch, 8 ch,12 ch Max.16ch or GbE combo ports 2ch, 4ch, 6ch Max.8ch

Aggregate Ethernet throughput

1 Gbps wire-speed

Aggregate – Gigabit Optical Interface

Number of port 2, 1+1 protection

Line rate 1.25G bps

Optical central wavelength 1310 nm nominal

Connector type LC (SFP housing)

Management

Console Port Electrical: RS232, DCE Protocol: VT-100 Connector: DB9, female

Telnet Access via SNMP Ethernet port

SNMP SNMP v1, v2c; Up to 3 Trap IPs

Management Embedded operations channel over fiber

Loss of Power Loss of power indication for remote unit

Auxiliary Data Channel 300 – 115200 bps , RS232C

Order-wire 300 – 3.4K Hz voice channel, RJ11 4 wire telephone handset interface

Alarm

Alarm History Alarm Type (i.e. RAI, AIS, LOS,RDI, LOF, AIS, CV, ES, SES, UAS, LPR, AOC)

Alarm Queue Maximum 100 alarm records which record the latest alarm type, location, and date & time

Alarm Threshold CV, ES, SES, UAS

Power

AC Module 90 to 240 VAC, 60 +/- 3Hz

48 VDC Module -42 to -56 VDC

Redundancy AC+DC, DC+DC or AC+AC

Power Consumption Max. 20W per system

Physical and Environmental

Dimensions

Standalone: 441x 445x 320 mm Rack: 430x 355x 370mm (W x H x D)

Temperature 0 - 45°C (shelf) or 0 - +65 °C @ 10 – 90 % RH, Non condensing (Outdoor)

Mounting 19 inch standalone desktop stackable and rack mount

Certification

EMC EN55022 Class A, EN55024, FCC Part 15 Class A

Safety EN60950-1, IEC60950-1

Standards Compliance

ITU-T G.703, G.704, G.823, G.826

IEC 61000-4-5 class 3

IEEE 802.3, 802.3u, 802.3z, 802.3x, 802.1q, 802.1ad (Q-in-Q)

IETF RFC 1643, RFC 1157, RFC 1213, RFC 1406, RFC 2863

Ordering Information

FMUX1000S- □□□□□ Rack type

CH : 1U 4-slot fiber multiplexer
AC : AC power module
DC : DC power module

Example: FMUX1000S-CH

FMUX-1000- □□□□□ Optional card

ETH1G : Gigabit Ethernet combo card
4E1/T1R : 4x E1/T1 RJ45 card
4E1B : 4x E1 BNC card
ETH1GF-4E1/T1 : 4E1/T1 plus 2x 1000Base-X Ethernet card
ETH1GT-4E1/T1 : 4E1/T1 plus 2x 10/100/1000Base-T Ethernet card

Example: FMUX-1000-ETH1G

E1 Interface Specification

E1 frame PCM31,PCM31C,PCM30,PCM30C and unframed, Framed (ITU-T G.703 and G.704 standard) Line Code HDB3

Rates 2.048Mbps+/-50ppm

Output Signal ITU-T G.703

Input Signal ITU-T G.703

Impedance 75 ohm unbalanced or 120 ohm balanced, software programmable

Jitter requirements Meet ITU-T G.823

Connector DB25 (optional DB25 to RJ45 or BNC connector available)

Channel 4 channels E1 per cacrd

Surge Protection IEC 61000-4-5 class 3

T1 Interface Specification

T1 frame SF, ESF and unframed, field selectable, Meet ITU-T G.703 and G.704 standard

Line Code AMI / B8ZS(selectable)

Rates 1.544M bps ± 50 ppm

Output Signal DS1 with 0, -7.5, -15 dB LBO

Input Signal DS1 with 0 dB to -26 dB ALBO

Impedance 100 ohm , balanced

Pulse Template Per AT&T TR 62411

Connector DB25 (optional DB25 to wire-wrap connector available)

Channel 4 channels T1 per card

Surge Protection IEC 61000-4-5 class 3

Gigabit Ethernet specification

Standard Comply with 802.3, 802.3u, 802.3ab and 802.3z

Data rate 10/100/1000Base-T for twisted pair GbE, 1000Base-X for optical GbE

Connector RJ45 for twisted pair GbE and LC (SFP) for optical GbE

No. of ports 2 x RJ45 and 2 x SFP combo / 2 x RJ45 / 2 x SFP

4Ch E1/T1 card

The 4 x E1/T1 4-Channel Port Cards for the Gigabit Fiber Multiplexer is modular PCAs which slide into the Gigabit fiber Multiplexer chassis and provide four completely independent ITU-T G.703 E1 or T1(DS1) interfaces. The PCA module terminates with a DB25F connector that is designed to connect to a physical adapter. The adapter is available in two options, one, with 4 pairs of BNC connectors for E1 75 Ohm unbalanced connections and the other with four RJ-45 jacks for E1 120 Ohm balanced or for T1 100 Ohm balanced connections. The 4 x E1/T1 card can be programmed as either E1 or T1 individually.

2Ch Combo Gigabit Ethernet card

The Gigabit Ethernet tributary card is equipped with 2 ports 10/100/1000 Base-T and 2 ports 1000Base-X SFP slots. The complete functions included Ethernet Bridge, VLAN stacking (QinQ, IEEE802.1ad) , Jumbo Frame packet, IEEE 802.1q VLAN, BPDU packet and Pause Frame transparency,Packet classification based on the 802.1P, 4 priority queues for packet classification, Strictly Priority or WRR Scheduling of the 4 priority queues and bandwidth control: 256Kbps, 512Kbps, 5Mbps and 50Mbps for different ranges of port speed.

E1/T1 plus Gigabit Ethernet Card

The E1/T1 plus Gigabit Ethernet tributary card is equipped with 2-port 10/100/1000 Base-T or 2-port Gigabit SFP slot plus E1/T1 4-Channel Port .The G.703 E1 or T1(DS1) interfaces module terminates is available in two options, one, with 4 pairs of BNC connectors for E1 75 Ohm unbalanced connections and the other with four RJ-45 jacks for E1 120 Ohm balanced or for T1 100 Ohm balanced connections. The 4 x E1/T1 can be programmed as either E1 or T1 individually.

Managed 16E1 +GbE Fiber Optical Multiplexer

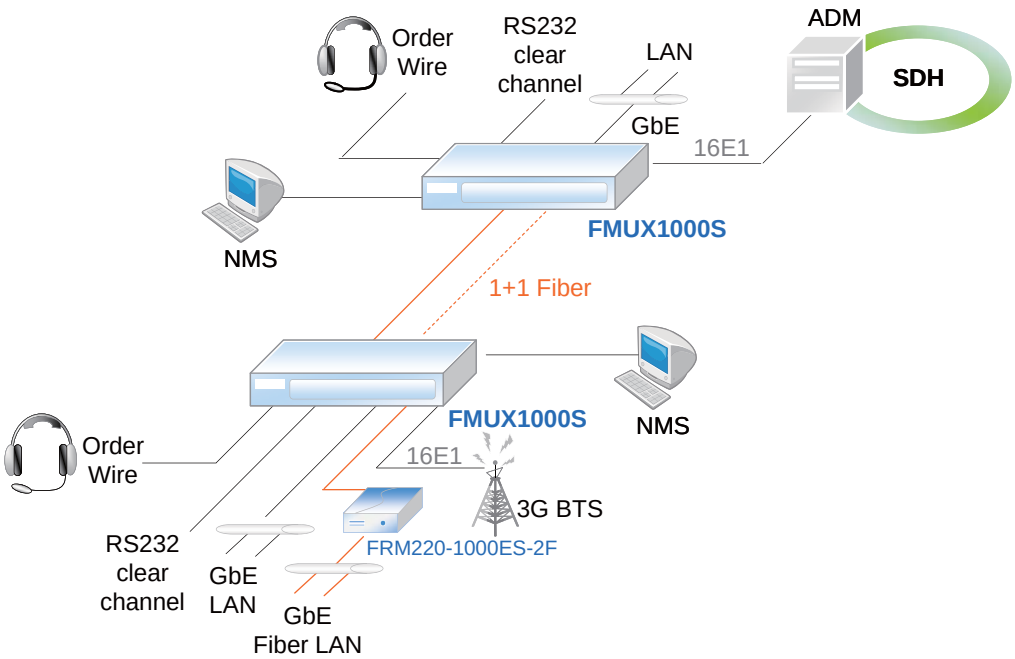

E1/T1/Voice/Datacom Fiber Multiplexer with Built-in 100Mbps Ethernet Trunk

FMUX01A/Plus

The FMUX01A/Plus is a 1U, 19" rack mountable, PDH fiber optic multiplexer that transmits up to 16 channels plus a wire speed 100Base-TX Fast Ethernet channel over a single fiber optic link. The FMUX01A/Plus chassis is available in five different power configurations: single AC, single DC, dual AC, dual DC or AC+DC. The AC supplies operate from 90~260VAC while DC supplies operate from 36~72VDC or 20~60VDC. From the rear of the chassis, one to four hot swappable quad E1 or T1 line cards, serial data communications (V.35, X.21, RS-530) or FXO/FXS voice cards are supported. The standard FMUX01A/Plus configuration may be viewed or set via the front panel LCD/menu keys, serial VT-100 terminal connection, Telnet or SNMP.

Features

- 1U, 19 (23)" 4 slot chassis
- 16 E1 (2.048Mb/s) Multiplexer, 100Mbps Ethernet and RS-232 data (async)
- RS-232 port for system console
- One alarm output port, one Order Wire port
- SNMP management
- LCD plus menu keys for local configuration
- 2 plug-in I/O slots for optical interface cards

Optical Interface :	Connector :	1x9 (SC, ST, FC)
	Data rate :	155.52Mbps
	Bit Error Rate :	Less than 10^{-11}
	Fiber :	MM 62.2/125□m, 50/125□m. SM 9/125□m
	Distance :	MM 2km. SM 15/30/50/80/120km, WDM 20/40/60/80km
	Wavelength :	1310, 1550nm
Electrical Interface :	Console, SNMP :	RJ45
	Ethernet :	2 x RJ45
	Alarm :	RS232 (DB9F)
Standard		E1:ITU-T, T1:ITU-T, AT&T, ANSI, Ethernet: IEEE802.3x
Indication		PWR, Alarm, LBK, RD, LCK, RNG, ACO, Port, Channels
Power input		AC : 100 ~240V
		DC24 : 20 ~ 60V, DC48 : 36 ~ 72V
Power Consumption		< 40W
Dimensions		250 x 438 x 43mm (DxWxH)
Weight		3.58 kg
Temperature		0~50°C (Operating) ,0~70°C (Storage)
Humidity		10~90% non-condensing
Certification		CE, FCC, RoHS
MTBF		57350 hours

Specifications - Modules

Fiber Optical Module	
Ports	1 + 1 ports (redundant)
Fiber Cable	9/ 125 um for single mode ; 50/ 125 or 62.5/ 125 for multi-mode
System Power Gain	> 25dB@1*10^{-10}
Wavelength Range	1280 — 1550nm
Connector	SC, FC, ST

The switching time between is less than 50m sec

FXO/FXS Module	
Standards	G.711 A-law
Voice channel transparent	T.38 and Group III Fax relay at 2.4 ~14.4kbps Fax application
Distance	300m
Bandwidth	64K voice channel
Connector	RJ11*4 (4 voice channel /per unit)
Receive Level	Short haul - 15dB
Internet application	Support modem pass-through


E1 BNC I/F


E1/T1 Wire-Wrap I/F

Fiber Optical Module	
Standards	ITU-T G.703, G.704, G.706, G.732
Ports	4 ports
Framing	Unframed (clear channel)
Data rate	2.048 Mbps ± 50 ppm
Line code	HDB3/AMI
Receive Level	Short haul - 15dB
Line impedance	75 ohms ± 5% / 120 ohms ± 5%
Connector	RJ-45 for 120 ohms BNC for 75 ohms Wirewrap for 120 ohms


E1/T1 RJ - 45 I/F

T1 Interface Module	
Standards	ITU-T G.703, G.704, AT&T TR-62411,ANSI T1.403
Ports	4 ports
Framing	Unframed (clear channel)
Data rate	1.544 Mbps ±50 ppm
Line code	B8ZS / AMI
Receive Level	Short haul - 15dB
Line impedance	100 ohms ±5%
Connector	RJ-45 for 100 ohms Wirewrap for 100 ohms


Datacom I/F

Datacom Interface Module	
Standards	N/A
Card Type	V.35/ RS-530 (Include X.21 and RS-449) / RS-232 I/F
Bit rate	n x 64K, n = 1 to 32
	V.35 & RS-530 up to 2Mbps
	RS-232 up to 128Kbps (SYNC)
	V.35H & RS-530H up to 8Mbps
Line code	NRZ
Clock Mode	Transparent, Recovery
	External (From data port)
	Internal (From oscillator)
Control Signal	CTS always On or follows RTS
	DSR constantly ON, except during test loops (RS-530 DSR always connect to DTR)
	DCD constantly ON,except during fiber signal loss
Test Loops	Local loop back, Remote loop back, V.54
Connector	Type Uses HD-68 pin D type Female with adapter cables

Managed 16E1 + Fast Ethernet Fiber Optical Multiplexer

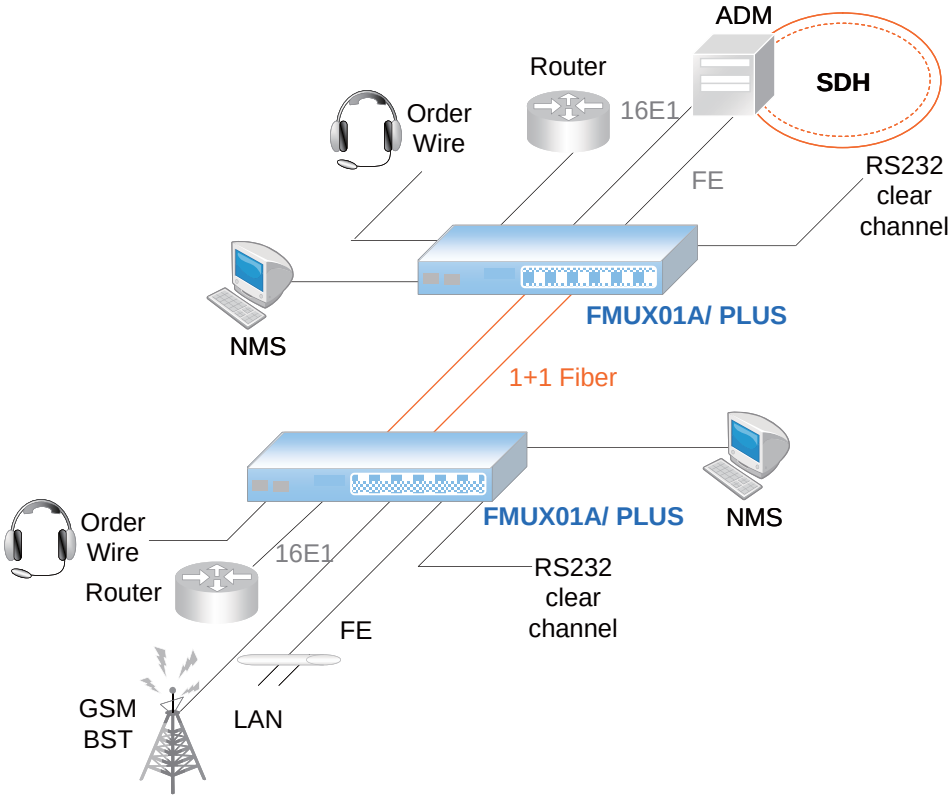

Ordering Information

FMUX01A/Plus- □□□□□ Power type

AC
DC
AD

Example: FMUX01A/Plus-AC

Ordering Information

FMUX01A/Plus- □□□□□ Optional card

4x E1/T1
DATA
FXO/FXS
EXT/CLK

Example: FMUX01A/Plus-4xE1/T1

PDH Fiber Optic Multiplexer Platform

FMUX20

The FMUX20 is a 2U high 19" Rack, 20-slot modular Fiber Optic Multiplexer rack, It provides an economic solution in high density fiber multiplexer installations in central offices. All critical components, Power, fans, management module and interface cards are hot swappable, allowing online field replacement. The hot-swappable power modules can be chosen from AC100-240V, DC18-36. or DC 36-72V. The chassis also has a pair of alarm relays and is able to stack up to 10 chassis as one management unit.

Features

- 2U 19" 20-slot Chassis with AC/DC power redundancy
- Chassis cascade up to 10 with one IP management
- Chassis backplane consists of passive components
- All modules and cards support hot-swap function
- Two alarm relays

Port	Network Management Controller Card : Electrical Interface : Console RS232, LAN 10/100Base-TX
Indication	Network Management Controller Card: Power, FAN Alarm, Act, STK, LAN LNK/SPD Gigabit Ethernet Switch Card FAN, PWR, ALM, STK, LNK/ACT/SPD
Power Input	AC : 100 ~ 240V DC24 : 18 ~ 36V, DC48: 36 ~ 72V
Power Consumption	150W
Dimensions	303 x 438 x 88 mm (D x W x H)
Weight	5.2g
Temperature	0 ~ 50 °C (Operating), -10 ~ 60 °C (Storage)
Humidity	5 ~90% non-condensing
Certification	CE, FCC, RoHS
MTBF	65,000 hrs (25 °C)

20 slot Transponder Platform

Technologies Supported:
Fiber Optic Multiplexer

Chassis backplane
consists of passive components

Chassis cascade
up to 10 with one IP management

Hot swappable
Thermal fans

Two Alarm relays

Single or optional redundant power supplies

Power Redundancy

All the FMUX20 chassis power supplies are hot swappable and modular, installing two into a chassis provides redundancy should a single power supply fail. A fully loaded chassis can run continuously with only one power module fitted into the chassis.

Intelligent Cooling Fan

To further increase system reliability, the FMUX20 chassis is fitted with two hot swappable fan modules. Both fan modules can be easily removed from the rear of the chassis, without interruption to the operation of the line cards. A fully loaded chassis can run continuously with only one fan module fitted into the chassis

Chassis cascade

The FMUX20 features cascadeable management which allows managing a stack (up to 10 chassis) from a single IP address. Chassis are interconnected with standard UTP cables that carry control signals. Each chassis has its own ID, starting with the master chassis ID0 and cascading up to ID9

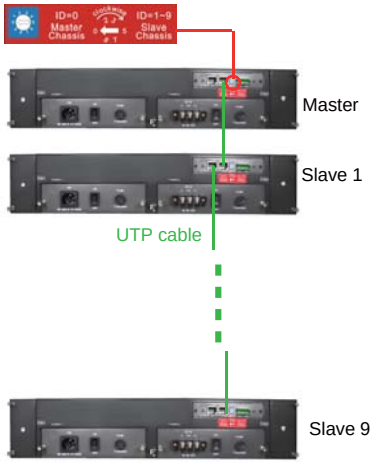

10 chassis cascade with one IP management

Network Management

The FMUX20 chassis provides an NMC (Network Management Controller) card which must be installed into the first slot of chassis. The NMC card allows a network administrator with the ability to configure and monitor the status of the blades. Management can be achieved locally over RS232, or over the network by Telnet, Web or SNMP.

Protocol Supported

The FMUX20 chassis has been designed as a Fiber Mux Managed platform. This allows network administrators to deploy the chassis in a wide range of Fiber Mux network. Technologies supported by the chassis included Ethernet Fiber Optic Multiplexer.

Ordering Information

FMUX20-□□□□□ Chassis type

CH-20: 2U 19" 20-Slot Chassis
AC : 100 ~ 240V
DC24 : 18 ~ 36V
DC48 : 36 ~ 72V

Example: FMUX20-CH20

FMUX20-□□□□□ Optional card

NMC : Network Management Card
4E1L : 4E1 +100Mbps Ethernet card

Example: FMUX-4E1L

4 Channel E1/T1, Order wire Plus 100M Ethernet Multiplexer

FMUX20-4E1L

FMUX20-4E1L is a card/blade designed 4xE1/T1 + Fast Ethernet Fiber Multiplexer with 1+1 fiber redundancy. FMUX20-4E1L provides E1/T1 transmissions transparently along with wire-speed 100Mbps Fast Ethernet simultaneously. The fiber optics utilize industry standard SFP technology that allows a flexible use of Multimode or Single mode lines and enables the support of different wavelengths and distances. The use of bi-directional SFPs maximizes the utilization of the fiber optic line and results in saving line costs. With SNMP and Web-based management in the FMUX20, the Network administrator can monitor, configure and control the activity of each card in the chassis.

Features

- Occupies two card slots
- 4 channels unframed E1/T1
- 10/100Base-TX Ethernet
- Auto MDI/MDIX
- Auto-Negotiation or Force mode
- Supports flow control
- Supports 9K jumbo packets
- Supports Link fault pass through (LFP)
- One clear channel RS232 up to 250Kbps(Async)
- 1+1 fiber protection, less than 50ms
- Supports Digital Diagnostics Monitoring Interface (DDMI)
- AIS on signal loss on E1/T1 and fiber port
- Loopback test on E1/T1, RS232, fiber ports
- Supports Dying Gasp to detect remote power off
- Supports local or In-band remote management
- Supports Order wire Ear / Microphone port.
- Supports On-Line F/W upgrade

Managed 4E1 + Fast Ethernet Fiber Optical Multiplexer

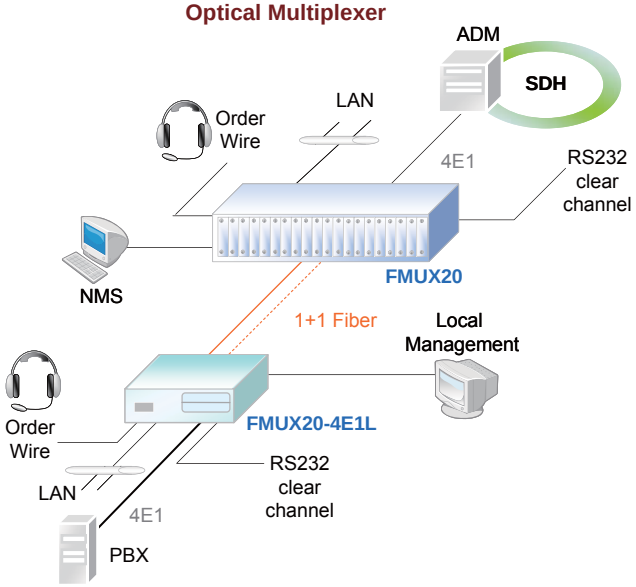

FMUX20-4E1L can be inserted in CH02M and CH20 chassis.
For local management, must use CH02M chassis.

E1/T1 ports	Framing	Unframed (transparent)
	Bit Rate	E1:2.048 Mb/s , T1: 1.544Mb/s
	Line Code	E1:AMI/HDB3, T1: AMI/B8ZS
	Line Impedance	
	E1: Unbalanced 75 ohms (BNC)	
	E1: Balanced 120 ohms (RJ-45)	
	T1: Balanced 120 ohms (RJ-45)	
	Receiver sensitivity	Short haul
	"Pulse" Amplitude	
	Nominal 2.37V+/-10% for 75 ohms	
	Nominal 3.00V+/-10% for 120 ohms	
	"Zero" Amplitude	+/-0.3V
	Internal Timing	+/-30 ppm
	Jitter Performance	According to ITU-T G.823/824
	Performance monitoring	According to ITU-T G.821
	Standard	ITU-T G.703, G.704, G.706 and G.732
	Interface Connectors	RJ-45, Wire wrap, BNC
	Test Loops	LLB (Local Loop Back)
		NELB (Near End Loop Back)
		RLB (Remote Loop Back)
		RRLB (Request Remote Loop Back)
	Interface Type	10/100Base-TX
Ethernet	Connector	RJ-45
	Standard	IEEE 802.3, 802.3u
	Duplex modes	full/half
	Test	Loop back test
Indication	IEEE 802.3, IEEE 802.3u,TS-1000	
	LED (Power, FEF, FX-Link, TX-SPD, TX-Duplex, TX-Link)	
Power Input	Card	: 12VDC
	Standalone : AC, DC options	
Power Consumption		
Dimensions	< 4W	
Weight	155 x 88 x 23mm (D x W x H)	
Operating Temperature	120g	
Storage Temperature	0 ~ 50°C (Operating), -10 ~ 70°C (Storage)	
Humidity	10 ~ 90% non-condensing	
Certifications	CE, FCC, LVD, RoHS	
MTBF	65,000 hrs (25°C)	

Ordering Information

FMUX20- □□□□□ Model type

4E1L : 4E1 +100Mbps Ethernet card

Example: FMUX-4E1L

4 Channel E1/T1, Order wire Plus 100M Ethernet Multiplexer

FMUX04E

FMUX04E is a modular design for 4xE1 + Fast Ethernet multi-service to dual strand fiber PDH multiplexer. FMUX04E provides E1 transmission transparently, pure 100Mbps Fast Ethernet simultaneously. The fiber optic line is based on the SFP technology that allows a flexible use of Multimode or Single mode lines and enable the support of different wavelengths and distances. The use of bi-directional SFPs maximizes the utilization of the fiber optic line and results in saving line costs. The multiplexer is equipped by default with redundant AC and DC power supplies for redundant operation. With SNMP and Web-based management in the FMUX04E, the Network administrator can monitor, configure and control the activity remotely

Features

- 4 channels unframed E1/T1
- 3 CH 10/100Base-TX Ethernet
- Auto MDI/MDIX
- Auto-Negotiation or Force mode
- Supports flow control
- Supports 1552 packets (max)
- One clear channel RS232 up to 250Kbps(Async)
- 1+1 fiber protection, less than 50ms
- Supports Digital Diagnostics Monitoring Interface (DDMI)
- AIS on signal loss on E1/T1 and fiber port
- VLAN function
- Loopback test on E1/T1, LAN, RS232, fiber ports
- Supports Dying Gasp
- Supports local or remote In-band management
- (Monitor or Configure status) SNMP manager and console port.
  Supports Order wire Ear / Microphone port.
- Supports On-Line F/W upgrade
- (local or remote) by the SNMP manager.
  Two power internal 1AC+1DC

Managed 4E1 + Fast Ethernet Fiber Optical Multiplexer

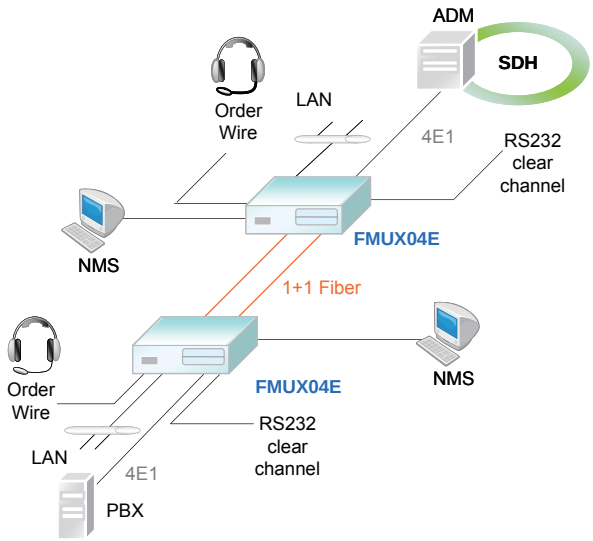

E1/T1 ports	
Framing	Unframed (transparent)
Bit Rate	E1:2.048 Mb/s , T1: 1.544Mb/s
Line Code	E1:AMI/HDB3, T1: AMI/B8ZS
Line Impedance	E1: Unbalanced 75 ohms (BNC)
	E1: Balanced 120 ohms (RJ-45)
	T1: Balanced 120 ohms (RJ-45)
Receiver sensitivity	Short haul
"Pulse" Amplitude	Nominal 2.37V+/-10% for 75 ohms
	Nominal 3.00V+/-10% for 120 ohms
	Nom
"Zero" Amplitude	+/-0.3V
Transmit Frequency Tracking	w/external clock card option
Internal Timing	+/-30 ppm
Jitter Performance	According to ITU-T G.823
Performance monitoring	According to ITU-T G.821
Ethernet	
Standard	ITU-T G.703, G.704, G.706 and G.732
Interface Connectors	RJ-45, Wire wrap, BNC
Test Loops	LLB (Local Loop Back)
	NELB (Near End Loop Back)
	RLB (Remote Loop Back)
	RRLB (Request Remote Loop Back)
Interface Type	10/100Base-TX
Connector	4xRJ-45
Standard	IEEE 802.3, 802.3u
Duplex modes	full/half
Test	Loop back test

Indication

FX1 Link, FX2 link , E1/T1 Mode/Link/Loopback test , Order wire phone indicator , LAN Link/Speed.

Power Input

AC : 100~240VAC

DC : 18-75 VDC

Dimensions

195.2x44x236.4mm(DxWxH)

Operating Temperature

0~50°C (Operating) ,-10~20°C (Storage)

Humidity

10~90% non-condensing

Certifications

CE, FCC, RoHS

Ordering Information

FMUX □□□□□ Model type

04E

Example: FMUX04E

1U 4-Slot STM-1 Add-Drop Multiplexer

SDH01A

The SDH01A, STM-1 Based Multi-Service Provisioning Platform, is an advanced compact Add Drop Multiplexer which can transmit up to 63 E1 and/or data service such as V.35 and Ethernet via an SMT-1 ring. The optical interface complies with international telecommunication standards, such as ITU-T G.655, G.652, and G.653. By utilizing a modular design for aggregate and low speed tributaries, the SDH01A can meet your network demands with a flexible combination of services at a lower cost. All of the pluggable modules are designed to be hot swapped without any interruption to traffic when plugging in or out. In addition to the E1 tributaries, other data interfaces are also provided for data communications such as V.35 and 10/100M Ethernet. Users can select any combination of modules according to their requirements. With its full function and multi-access capability, the SDH01A is your best choice for optical SDH networks.

Features

- Stand-alone and rack-mount in 19 or 23 inch EIA rack.
- Up to 32 E1 (4, 8, 12, 16 & 32)
- Flexible ADM (add/drop multiplexer) with 63 available VC12 resources
- Up to 4 tributary cards per unit.
- Every module hot swappable
- Backup configurations in flash for system restart or power failure.
- Various services, such as E1, V.35 and 10/100M Ethernet
- Ethernet traffic is encapsulated and transported over SDH using Generic Framing Procedure (GFP) & Virtual Concatenation (VCAT)
- E1 transparent transmission with HDB3 or AMI line coding
- EoS (Ethernet over SDH) for E-LAN. Supports Ethernet traffic in all nodes of rings
- Single-ended network management
- 1+1 APS for optical line and module (optical redundancy)
- Three timing synchronization modes
- Alarm relays
- Alarm and performance monitoring
- Administration security with login by username and password assigned by supervisor
- Menu-driven and SNMP management interfaces
- Local and remote loop back functions for optical and E1 I/Fs
- Dual power AC + DC

Optical Interface	Connector	1x9 (SC, FC)
	Data rate	155.52Mpbs (STM-1)
	Fiber	SM 9/125μm
	Distance	SM 30/60/120km, WDM 60km
	Wavelength	1310nm, 1550nm
Electrical Interface	Console	D-type 9-pin female
	SNMP, LAN	RJ45
	Alarm	D-type 9-pin male
	Frame Ground	Screw
Standard	STM1: ITU-T G.707, G.841, G.783, G.803, G.652	
	E1: ITU-T G.703 G.704, G.706, G.732, G.823	
	T1: ITU-T G.703 G.704, G.706, G.733	
	Ethernet: ITU-T G.7041 GFP-F, G.707 VCAT, IEEE802.3x, 802.1p, 802.1q, 802.3ad, 802.1w, 802.1d	
	V35: ITU-T V.35, ITU-T G703	
Indication	PWR, WK, FLT-fault, Alarm, ACO, RDI, LBK, Channels, Ethernet	
Power	AC : 90 ~ 264V, DC24 : -36 ~ -72V	
Power Consumption	< 15W	
Dimensions	312 x 440 x 44mm (D x W x H)	
Weight	3.6 kg	
Temperature	0 ~ 50°C (Operating) ,-10 ~ 70°C (Storage)	
Humidity	10 ~ 90% non-condensing	
Certification	CE, FCC, RoHS	
MTBF	50,000 hours	

Managed STM-1 Add Drop Multiplexer

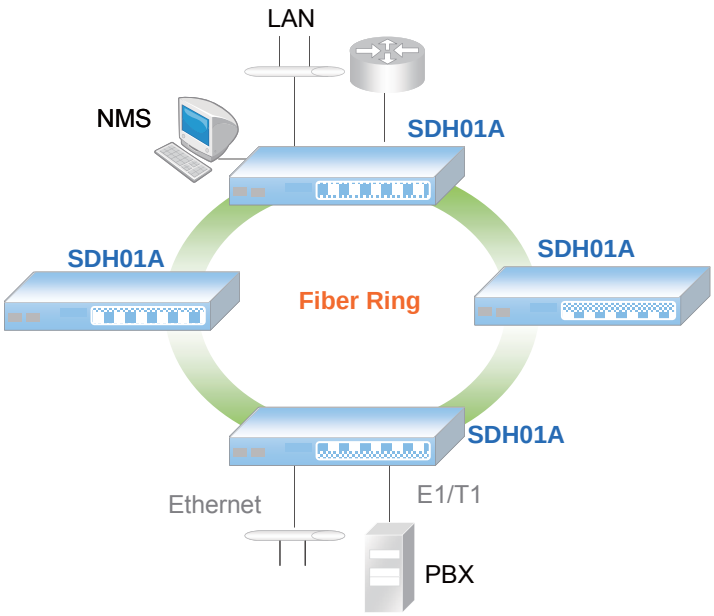

Ordering Information

SDH01A- □□□□□ Power type

CH-AD : Chassis with AC+DC power

Example: SDH01A-CH-AD

SDH01A- □□□□□ Optional card

4E1B : 4ch E1 BNC card
8E1R : 8ch E1 RJ45 card
4E1R : 4ch E1 RJ45 card
4V35 : 4ch V35 card
4SW : 4-port Ethernet switch card
ET3 : E3 card

Example: SDH01A-4V35

16 Cahnnel E1, Data, 4-port Ethernet STM-1 Add-Drop Multiplexer

SDH01A / T

The SDH01A/T, STM-1 Based Multi-Service Provisioning Platform, is an advanced compact Add Drop Multiplexer which can transmit up to 63 E1 and/or data service such as V.35 and Ethernet via an SMT-1 ring. The optical interface complies with international telecommunication standards, such as ITU-T G.655, G.652, and G.653. By utilizing a modular design for aggregate and low speed tributaries, the SDH01A/T can meet your network demands with a flexible combination of services at a lower cost. All of the pluggable modules are designed to be hot swapped without any interruption to traffic when plugging in or out. In addition to the E1 tributaries, other data interfaces are also provided for data communications such as V.35 and 10/100M Ethernet. Users can select any combination of modules according to their requirements. With its full function and multi-access capability, the SDH01A/T is your best choice for optical SDH networks.

Optical Interface	Connector	1x9 (SC, FC)
	Data rate	155.52Mpbs (STM-1)
	Fiber	SM 9/125μm
	Distance	SM 30/60/120km, WDM 60km
	Wavelength	1310nm, 1550nm
Electrical Interface	Console	D-type 9-pin female
	SNMP, LAN	RJ45
	Alarm	D-type 9-pin male
	Frame Ground	Screw
Standard	STM1: ITU-T G.707, G.841, G.783, G.803, G.652	
	E1: ITU-T G.703 G.704, G.706, G.732, G.823	
	T1: ITU-T G.703 G.704, G.706, G.733	
	Ethernet: ITU-T G.7041 GFP-F, G.707 VCAT, IEEE802.3x, 802.1p, 802.1q, 802.3ad, 802.1w, 802.1d	
	V35: ITU-T V.35, ITU-T G703	
Indication	PWR, WK, FLT-fault, Alarm, ACO, RDI, LBK, Channels, Ethernet	
Power	AC : 90 ~ 264V, DC24 : -36 ~ -72V	
Power Consumption	< 15W	
Dimensions	312 x 440 x 44mm (D x W x H)	
Weight	3.6 kg	
Temperature	0 ~ 50°C (Operating) ,-10 ~ 70°C (Storage)	
Humidity	10 ~ 90% non-condensing	
Certification	CE, FCC, RoHS	
MTBF	50,000 hours	

Features

- Stand-alone and rack-mount in 19 or 23 inch EIA rack.
- Up to 32 T1 or E1 (4, 8, 12, 16 & 32)
- Flexible ADM (add/drop multiplexer) with 63 available VC12 resources
- Up to 4 tributary cards per unit.
- Every module hot swappable
- Backup configurations in flash for system restart or power failure.
- Various services, such as E1/T1, V.35 and 10/100M Ethernet
- Ethernet traffic is encapsulated and transported over SDH using Generic Framing Procedure (GFP) & Virtual Concatenation (VCAT)
- E1 transparent transmission with HDB3 or AMI line coding
- EoS (Ethernet over SDH) for E-LAN. Supports Ethernet traffic in all nodes of rings
- Single-ended network management
- 1+1 APS for optical line and module (optical redundancy)
- Three timing synchronization modes
- Alarm relays
- Alarm and performance monitoring
- Administration security with login by username and password assigned by supervisor
- Menu-driven and SNMP management interfaces
- Local and remote loop back functions for optical and E1/T1 I/Fs
- Dual power AC + DC

Ordering Information

SDH01A/T-□□□□□ Power type

CH-AD : Chassis with AC+DC power

Example: SDH01A-CH-AD

SDH01A/T-□□□□□ Optional card

E1B : 4ch E1 BNC card
8E1R : 8ch E1 RJ45 card
E1R : 4ch E1 RJ45 card
T1R : 4ch T1 RJ45 card
V35 : 4ch V35 card
SW : 4-port Ethernet switch card
T3 : E3 card

Example: SDH01A/T-V35

Managed STM-1 Add Drop Multiplexer

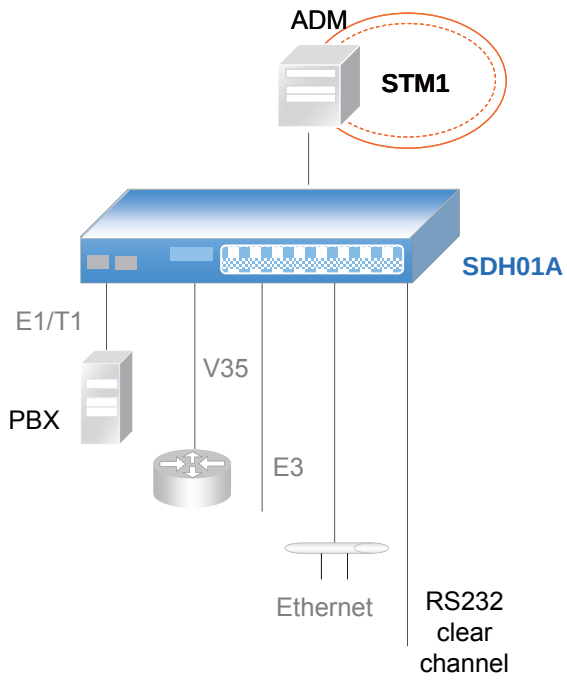

2U Managed 4-slot OLT Chassis

OLT-200

The OLT-200E is 2U 19" EPON OLT chassis. It complies with IEEE 802.3ah standard and provides 4-slot for PON interfaces module. The PON card is modularized design and have two PON port on each card. Each PON port supports 32 ONU for subscribers. So, One OLT-200E chassis can support up to 256 subscribers. OLT-200E provide combo Uplink interface SFP slot and 10/100/1000Base-T. It is the lowest cost deployment for FTTB/FTTH.

Features

- Compliant to IEEE 802.3ah standard
- Flexible QoS management for triple play service
- Flexible VLAN management to meet operator's service model
- Support IGMP proxy and IGMP snooping for efficient Multicast
- Support full suite of security and administrative functions
- Support completed OAM&P functions
- Support 256 subscribers

Security and Authentication	Support upstream and downstream AES-128 encryption Support 8,192 MAC address per ODN Limit the number of ONU user MAC address from 1 to 64 ONU authentication by MAC address or 802.1x
Remote ONU Management	IEEE 802.3ah OAM channel Loop back test ONU configuration/provisioning Configuration parameters save/reload Performance management Firmware upgrade Status/Alarm report
Hardware Physical Specification	Dimensions(mm): 437(W) x 365(D) x 88(H) Weight: 6 Kg Power input: DC -48V or AC 110/220V 60/50 Hz Power consumption: 70W typical
Operating Environment	Ambient operating temperature: 0°C ~ 45°C Relative Humidity: 5%~90% (non-condensing)
Certification	FCC/CE

Hardware Architecture	19"rack chassis 4 pluggable PON module 1 pluggable SCU module
PON Module	*Interface* 2 PON/module, 8 PON/chassis SC type connector 32 ONUs per PON 1000BASE-PX20E-D for 20 km Wavelength: 1310nm(upstream) 1490nm(downstream) *Service Network Interface* 2 SNI/module, 8 SNI/chassis Connector type: RJ-45 or SFP 1000Base-T Interface (RJ-45) or 1000Base-SX/LX(SFP)
SCU Module	1 RS232 Console Port 1 10/100 Ethernet Port Support CLI, SNMPv1 & SNMPv2c Support SNTP client Support RFC845 Telnet Support RFC1350 FTP
Supported MIBs	RFC 1157 SNMP v1, SNMPv2 RFC1213 (MIBII) RFC1493 (Bridge MIB) RFC1757 (RMON) RFC2674 (pBridge and qBridge) RFC 4878 OAM Functions EPON proprietary MIBs
VLAN	Support VLAN tag add/delete/transparent mode Support 256 configurable VLANs per ODN Service-based dedicated VLAN capability
Multicast	Support IGMP v2 Support IGMP proxy and Fast Leave Support 256 multicast groups
Quality of Service	8 IEEE 802.1p priority level Static and dynamic bandwidth allocation (DBA) for upstream traffic Service Level Agreement: Min. bandwidth, Max. Bandwidth, delay and Priority Rate Limiting for each service Configurable DBA from SNMP or RS232 Console

Ordering Information

OLT200- □□□□□ Chassis type

CH : 2U 19" 4 slots chassis
AC : 100 ~ 240 AC power card
DC : 18 ~ 72 DC power card

Example: OLT200-CH

OLT200- □□□□□ Optional card

SCU : System control SNMP card
22 : 2ch 1000T to 1000PX 2km PON card

Example: OLT200-22

1-Port 10/100/1000TX ONU

ONU-311

CTC all types of Optical Network Unit (ONU) are IEEE 802.3ah standard compliant. Each model provides one PON port to connect to the central office OLT, but with different User Network Interfaces. ONU300 has one 10/100/1000Base-T user network interface.. All of ONU300 meet the future triple-play service requirements.

Features

- Compliant to IEEE 802.3ah standard
- Support 1 optical interface and 1 10/100/1000Base-T User Network Interface
- Flexible QoS management for triple play service
- Flexible VLAN management to meet operator's service model
- Support IGMP snooping for efficient Multicast
- Support filtering function to permit/deny upstream traffic

PON Interface	SC type connector 1000BASE-PX10E-U for 10Km or 1000BASE-PX20E-U for 20Km Wavelength: 1310nm(upstream), 1490nm (downstream)
User Network Interface(UNI)	1 10/100/1000BASE-T
Managment Interface	1 RS232 Console Port
VLAN	Support transparent bridging protocol specified in IEEE 802.1D Support VLAN tag add/ delete/ transparent mode
Multicast	Support IGMP v2 Support IGMP snooping Support 8 multicast groups
Quality of Service	Support 4 priority queues, one per traffic class Support advanced classification capability to map upstream traffic to priority queues according to: ■ IPv4 DSCP ■ Source/Destination IPv4 Address ■ 802.1p priority field ■ Ether type field
Security and Filtering	Support upstream and downstream AES-128 encryption Support the filtering function to permit and deny the upstream user traffic according to: ■ Ether type field ■ VLAN ID ■ Source/Destination MAC Address ■ Source/Destination IPv4 Address
Management and Diagnostic	Support OAM loopback test Notify OLT System via dying gasp message when the ONU is in power failure Support remote firmware upgrade Support downstream and upstream FEC
Hardware Physical Specification	Dimensions(mm): 187(W) x 145(D) x 38(H) Weight: 1.5 Kg Power input: DC 12V (External AC power adapter) Power consumption: 6W typical
Operating Environment	Ambient operating temperature: -10°C ~ 45°C Relative Humidity: 5%~90% (non-condensing)
Certification	FCC

Ordering Information

ONU- □□□□□ Model type

311 : 10/100/1000T to 1000PX 10km ONU
312 : 10/100/1000T to 1000PX 20km ONU

Example: ONU-311

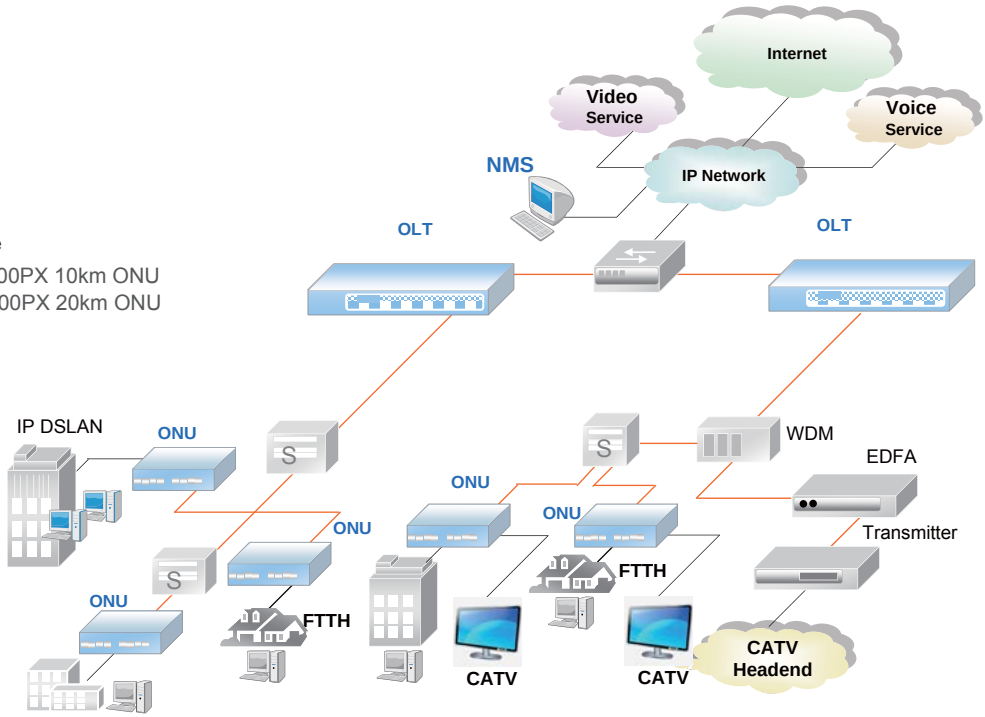

4-port 10/100TX ONU

ONU-241

CTC all types of Optical Network Unit (ONU) are IEEE 802.3ah standard compliant. Each model provides one PON port to connect to the central office OLT, but with different User Network Interfaces.. ONU240 provides four 10/100 Base-T user network interfaces. TONU240 provides four 10/100 Base-T user network interfaces, and also supports one RF interface for FTTH/FTTB CATV solution. All of them meet the future triple-play service requirements.

Features

- Compliant to IEEE 802.3ah standard
- Support 1 optical interface and 1 10/100/1000Base-T User Network Interface
- Flexible QoS management for triple play service
- Flexible VLAN management to meet operator's service model
- Support IGMP snooping for efficient Multicast
- Support filtering function to permit/deny upstream traffic

PON Interface	SC type connector 1000BASE-PX10E-U for 10Km or 1000BASE-PX20E-U for 20Km Wavelength: 1310nm(upstream), 1490nm (downstream)
User Network Interface(UNI)	4 10/100BASE-TX
Managment Interface	1 RS232 Console Port
VLAN	Support transparent bridging protocol specified in IEEE 802.1D Support VLAN tag add/ exchange/ transparent mode Support 4 port-based VLAN
Multicast	Support IGMP v2 Support IGMP snooping per UNI port Support 8 multicast groups

Quality of Service	Support 4 priority queues, one per traffic class Support advanced classification capability to map upstream traffic to priority queues according to: ■ IPv4 DSCP ■ Source/Destination IPv4 Address ■ 802.1p priority field ■ Ether type field
CATV service	Support 1 RF interface for FTTH CATV service (for TONU200 model)
Security and Filtering	Support upstream and downstream AES-128 encryption Support the filtering function to permit and deny the upstream user traffic according to: ■ Ether type field ■ VLAN ID ■ Source/Destination MAC Address ■ Source/Destination IPv4 Address
Management and Diagnostic	Support OAM loopback test Notify OLT System via dying gasp message when the ONU is in power failure Support remote firmware upgrade Support downstream and upstream FEC
Hardware Physical Specification	Dimensions(mm): 230(W) x 145(D) x 38(H) Weight: 1.5 Kg Power input: DC 12V (External AC power adapter) Power consumption: 12W typical
Operating Environment	Ambient operating temperature: -10°C ~ 45°C Relative Humidity: 5%~90% (non-condensing)
Certification	FCC

Ordering Information

ONU- □□□□□ Model type

241 : 4-port 10/100TX to 1000PX 10km ONU
242 : 4-port 10/100TX to 1000PX 20km ONU

Example: ONU-241

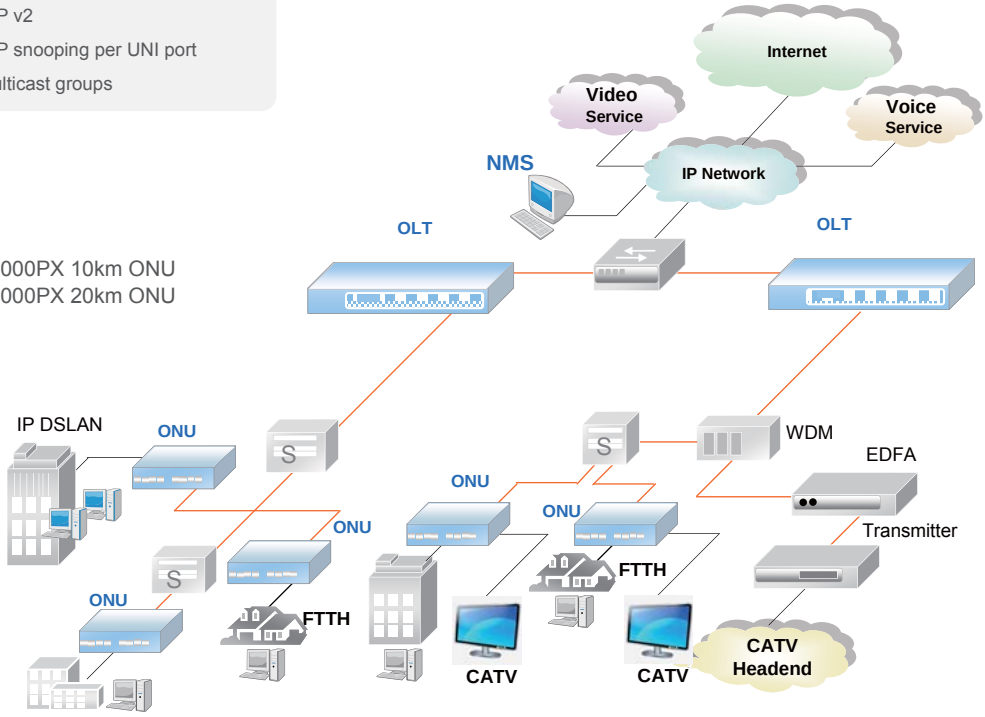

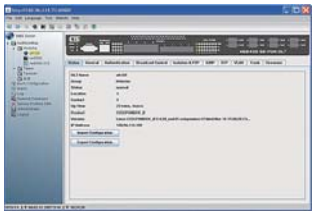

GEPON Network Management System
OLT-EMS

E-PON NMS is a Java-based, client/server GUI Network Management System (NMS). It can manage at least 100 CTC EPON system and 50,000 ONUs plus all of fiber network equipments of CTC. The products include EPON OLT, EPON ONU, CATV Optical Transmitters, and EDFA amplifiers. E-PON NMS provides OAM&P functions such as the daily record of the network activity Log, Alarm, Equipment Firmware Upgrading, Configuration Management, Performance Management, Security Management, Fault Management, and Group Management etc.

The system architecture of E-PON NMS is three-tier. It includes client, NMS server, and the managed EPON network equipments. E-PON NMS allows many administrators to manage the network equipment at the same time through the web browser. The NMS server can accept the SNMP traps that issued by the network equipments. With E-PON NMS, administrator can easily control the current network status. .

Items	E-PON NMS
System Requirements	CPU: Intel Pentium P4-1.6G or higher DRAM: 256MB or higher Display: 1024x768 or higher OS: Windows 2000 or Windows XP Java J2SE 1.4.2 or above MySQL 4.0.18 or above
User Interface	Java-based GUI Configure multi-COA simultaneously
Configuration Management	Interface configuration SLA provision Firmware update Downloadable DBA function Remote control of ONU
Fault Management	Local/Remote loopback testing Ping testing Link status detection System fault detection Dying Gasp
Performance Management	Local/Remote PON/Ethernet interface statistic collection and history
Security Management	Data encryption/decryption ONU authentication (802.1x and RADIUS)
Account Management	Client information update Freeze/unfreeze client connection
Database (MySQL)	Data collection and history Account management

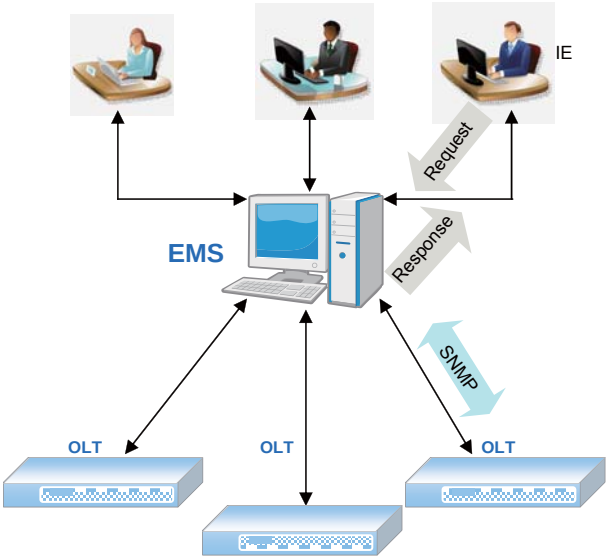

Ordering Information

OLT-□□□□□ Model type

NMS : GE-PON Network Management System Software

Example: OLT-NMS

Hot-pluggable fiber transceiver modules
SFP / GBIC

GBIC/ SFP Transceivers are high performance, cost effective modules for serial optical data communications applications specified for a single mode at 1.25/2.5Gbps. They operate with +3.3V/5V power supplies and are intended for single mode or multi-mode fiber, operating at a nominal wavelength of 1310(850) nm. Each GBIC/ SFP Transceiver consists of a transmitter optical subassembly, a receiver optical subassembly and an electrical subassembly. GBIC/ SFP Transceivers are duplex SC/ LC transceiver designed for use in Gigabit Ethernet and to provide an IEEE-802.3z compliant link for 1.25/2.5Gbps short or long reach applications.

Features

- Features
- SFP & SFP+ Multi-Source Agreement compliant
- Single 3.3V power supply
- Duplex or Simplex LC receptacle connector
- Up to 10Gb/s bi-directional data links
- Class 1 laser safety standard IEC825 compliant
- Hot Pluggable
- Lower power dissipation

Ordering Information

XX-	X-	X	XXX-	XXX
Connector Type	***Fiber Type***	***Speed Type***	***Connectivity Distance***	***Wave length***
GB: GBIC	S: SM	9: 2.5G	000: 2km/ 550m	S85: SX850
SF: SFP	M: MM	7: 1.25G	010: 10km	L31: LX1310
		5: 155M	040: 40km	Z55: ZX1550
			080: 80km	WA: T13/ R15
			120: 120km	WB: T15/ R13
				CXX: CWDM

100Base-X Dual fiber SFP

Model Name	Wavelength(nm)	Media	Optical Power(dBm)	Sensitivity(dBm)	Margin	Distance
SFM-5000-L31	1310	MMF	-20 ～-14	-32	12	2km
SFM-5005-L31	1310	MMF	-9 ～ 0	-30	21	5km
SFS-5030-L31	1310	SMF	-15 ～ -8	-34	19	30km
SFS-5060-L31	1310	SMF	-5 ～ 0	-35	30	60km
SFS-5080-L31	1310	SMF	0 ～ +5	-36	36	80km
SFS-5100-Z55	1550	SMF	-5 ～ 0	-35	30	100km
SFS-5120-Z55	1550	SMF	0 ～ +5	-35	35	120km
SFS-5080-Cxx	CWDM	SMF	-5 ～ 0	-35	30	---
SFS-5100-Cxx	CWDM	SMF	0 ～ +5	-35	35	---
SFT-5000-R45	---	Copper	---	---	---	100m

100Base-BX, Single fiber Bi-Directional SFP

Model Name	Wavelength(nm)	Media	Optical Power(dBm)	Sensitivity(dBm)	Margin	Distance
SFM-5010-WA	T1310/R1550	MMF	-14 ～ -8	-28	14	10km
SFM-5010-WB	T1550/R1310	MMF	-14 ～ -8	-28	14	10km
SFS-5020-WA	T1310/R1550	SMF	-14 ～ -8	-32	18	20km
SFS-5020-WB	T1550/R1310	SMF	-14 ～ -8	-32	18	20km
SFS-5040-WA	T1310/R1550	SMF	-8 ～ -0	-34	26	40km
SFS-5040-WB	T1550/R1310	SMF	-8 ～ -0	-34	26	40km
SFS-5060-WA	T1310/R1550	SMF	-5 ～ -0	-34	29	60km
SFS-5060-WB	T1550/R1310	SMF	-5 ～ -0	-34	29	60km

1.25Gbps (1000Base-X, Fiber Channel) GBIC

Model Name	Wavelength(nm)	Media	Optical Power(dBm)	Sensitivity(dBm)	Margin	Distance
GBM-7000-S85	850	MMF	-9.5 ~ -4	-17	26	550m
GBM-7002-L31	1310	MMF	-9 ~ -1	-19	29	2km
GBS-7010-L31	1310	SMF	-9.5 ~ -3	-20	10.5	10km
GBS-7040-L31	1310	SMF	-2 ~ +3	-23	21	40km
GBS-7050-Z55	1550	SMF	-3 ~ +2	-24	21	50km
GBS-7080-Z55	1550	SMF	0 ~ +5	-24	24	80km
GBS-7120-Z55	1550	SMF	0 ~ +5	-30	30	120km

1.25Gbps (1000Base-X, Fiber Channel) SFP

Model Name	Wavelength(nm)	Media	Optical Power(dBm)	Sensitivity(dBm)	Margin	Distance
SFM-7000-S85	850	MMF	-9.5 ~ -4	-17	26	550m
SFM-7002-L31	1310	MMF	-9 ~ -1	-19	29	2km
SFS-7010-L31	1310	SMF	-9.5 ~ -3	-20	10.5	10km
SFS-7020-L31	1310	SMF	-8 ~ -2	-23	15	20km
SFS-7040-L31	1310	SMF	-2 ~ +3	-23	21	40km
SFS-7060-Z55	1550	SMF	-3 ~ +2	-24	21	60km
SFS-7080-Z55	1550	SMF	0 ~ +5	-24	24	80km
SFS-7120-Z55	1550	SMF	0 ~ +5	-30	30	120km
SFS-7040-Cxx	CWDM	SMF	-5 ~ 0	-23	18	---
SFS-7080-Cxx	CWDM	SMF	0 ~ +5	-24	24	---
SFS-7100-Cxx	CWDM	SMF	0 ~ +5	-30	30	---
SFT-7000-R45	---	Copper	---	---	---	100m

1.25Gbps (1000Base-X, Single Fiber Bi-Directional) SFP

Model Name	Wavelength(nm)	Media	Optical Power(dBm)	Sensitivity(dBm)	Margin	Distance
SFS-7010-WA	T1310/R1550	SMF	-9 ~ -3	-20	11	10km
SFS-7010-WB	T1550/R1310	SMF	-9 ~ -3	-20	11	10km
SFS-7020-WA	T1310/R1550	SMF	-7 ~ -2	-22	15	20km
SFS-7020-WB	T1550/R1310	SMF	-7 ~ -2	-22	15	20km
SFS-7040-WA	T1310/R1550	SMF	-3 ~ -2	-23	20	40km
SFS-7040-WB	T1550/R1310	SMF	-3 ~ -2	-23	20	40km
SFS-7060-WA	T1310/R1550	SMF	0 ~ +5	-24	24	60km
SFS-7060-WB	T1550/R1310	SMF	0 ~ +5	-24	24	60km

2.5Gbps Multi-Rate (155M ~ 2.67G) SFP

Model Name	Wavelength(nm)	Media	Optical Power(dBm)	Sensitivity(dBm)	Margin	Distance
SFS-9002-L31	1310	SMF	-10 ~ -3	-18	8	2km
SFS-9015-L31	1310	SMF	-5 ~ 0	-18	13	15km
SFS-9025-Z55	1550	SMF	-5 ~ 0	-18	13	25km
SFS-9040-L31	1310	SMF	-3 ~ +2	-27	24	40km
SFS-9080-Z55	1550	SMF	-3 ~ +2	-28	25	80km
SFS-9100-Z55	1550	SMF	0 ~ +5	-30	30	100km
SFS-9040-Cxx	CWDM	SMF	-1 ~ +4	-21	20	40km
SFS-9080-Cxx	CWDM	SMF	-2 ~ +3	-28	26	80km
SFS-9100-Cxx	CWDM	SMF	0 ~ +5	-30	30	100km

10Gbps SFP+

Model Name	Wavelength(nm)	Media	Optical Power(dBm)	Sensitivity(dBm)	Margin	Distance
SFM-1000-SR85	850	MMF	-7.3 ~ -1	-9.1	1.8	300m
SFS-1010-LR31	1310	SMF	-8.2 ~ +0.5	-14.4	6.2	10km

1.25Gbps Transceiver - GBIC and 1x 9

Transceiver GBIC / 1x9	Distance (km)	Wavelength (nm)	Optical Power (dBm)	Sensitivity (dBm)	Power Budget (dB)	Diode	Connector	BER
MM	0.55	850	-4 ~ 9.5	-18	8.5	FP	SC	$< 10^{-12}$
	2	1310	-1 ~ -9	-19	10	FP		
SM	10	1310	-3 ~ -9.5	-20	10.5	FP		
	20	1310	-5 ~ 0	-20	15	FP		
	40	1310	+3 ~ -4	-23	19	DFB		
	50	1550	+1 ~ -4	-23	19	DFB		
	80	1550	+5 ~ 0	-23	23	DFB		
WDM	10A	1310(Tx) / 1550(Rx)	-3 ~ -9	-20	11	FP		
	10 B	1550(Tx) / 1310(Rx)	-3 ~ -9	-20	11	FP		
	20 A	1310(Tx) / 1550(Rx)	-3 ~ -8	-23	15	FP		
	20 B	1550(Tx) / 1310(Rx)	-3 ~ -8	-23	15	FP		
	40 A	1310(Tx) / 1550(Rx)	+2 ~ -3	-23	20	DFB		
	40 B	1550(Tx) / 1310(Rx)	+2 ~ -3	-23	20	DFB		
	60 A	1310(Tx) / 1550(Rx)	+5 ~ 0	-24	24	DFB		
	60 B	1550(Tx) / 1310(Rx)	+4 ~ -2	-25	23	DFB		

155Mbps Transceiver - 1x 9

Transceiver GBIC / 1x9	Distance (km)	Wavelength (nm)	Optical Power (dBm)	Sensitivity (dBm)	Power Budget (dB)	Diode	Connector	BER
MM	2	1310	-14 ~ -20	-31	11	FP	SC ST FC	$< 10^{-12}$
SM	15	1310	-5 ~ -17	-35	18	FP		
	30	1310	-5 ~ -15	-35	20	FP		
	50	1310	+2 ~ -8	-36	28	FP		
	80	1550	0 ~ -5	-34	29	DFB		
	120	1550	+5 ~ 0	-35	35	DFB		
WDM	20 A	1310(Tx) / 1550(Rx)	-7 ~ -15	-32	17	FP	SC	
	20 B	1550(Tx) / 1310(Rx)	-7 ~ -18	-32	14	FP		
	40 A	1310(Tx) / 1550(Rx)	0 ~ -7	-32	25	FP		
	40 B	1550(Tx) / 1310(Rx)	0 ~ -8	-32	24	FP		
	60 A	1310(Tx) / 1550(Rx)	0 ~ -5	-34	29	DFB		
	60 B	1550(Tx) / 1310(Rx)	0 ~ -5	-34	29	DFB		
	80 A	1310(Tx) / 1550(Rx)	+5 ~ 0	-34	34	DFB		
	80 B	1550(Tx) / 1310(Rx)	+4 ~ -2	-34	33	DFB		

Fiber Attenuator
Attenuator

FC Type ST Type SC Type

CTC Union offers 1 ~ 20dB and standard attenuation values at 3, 5, 10, 15 and 20 dB, advantaging economy scale for mass productive supply and custom-made attenuation value meeting your specific requirement, supported by our technical team to obtain the best synergy.

Features

- Low back reflection
- High power endurance
- Precise control of attenuation range
- Easy installation
- Environmentally stable
- Customer design specification
- Readily panel mountable

Mode Type	SM, MM
Operating wavelength (nm)	1310, 1550
MAX PDI (dB)	≤ 0.1
Attenuation Value	± 0.5dB (< 10dB)
	± 1.0dB (> 10dB)
Return Loss (dB)	UPC > 55db, APC> 60dB, PC>45dB
Operating Temperature	-30 ~ 75°C
Storage Temperature	-40 ~ 85°C
Connector Type	SC, FC, ST, LC

Build-out Attenuator (Fixed Type)

Hybrid Attenuator / Adapter (LC/SC,LC/FC,FC/LCSC/LC, SC/FC,SC/ST)

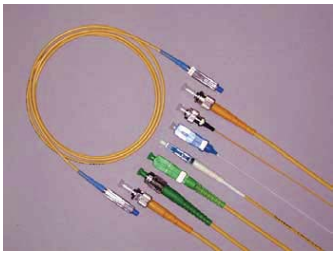

In-Line Built-out Attenuator

Ordering Information

FA-I□-PC□ □□

1 *2* *3*

1	*2*	*3*
Fiber mode	***Connector Type***	***Attenuation Value***
S: Single-mode	S: SC	01 ~ 25 dB
M: Multi-mode	F: FC	
	L: LC	

Fiber Patch Cords& Pigtail Cables

Fiber patch cable and pigtail are ultra reliable devices featuring low insertion loss and back reflection. The fiber patch cable and pigtail come with your choice of simplex or duplex cable configurations and various types of pigtail and connector terminations to meet your requirement.

Features

- Meets JIS C5973 F04 type and EIA/TIA 604-3A standards
- Economical in both design and termination process
- Reduce assembly time and simplify training
- Reduce maintenance and creates consistent optical performance
- Stable performance

Application

- CATV Network
- Telecommunication Network
- Data communication Network
- Active device termination
- Instrumentation

Fiber Types	Single-mode (9/125um), Multi-mode (50/125um, 62.5/125um). Simplex and Duplex
Connector	ST, SC, FC, LC, MTRJ, MU
Insertion Loss (dB)	< 0.2dB (typical 0.3dB)
Return Loss (dB)	-60dB
Operating Temperature	-40 ~ 75°C
Storage Temperature	-55 ~ 85°C
Tension Repellence	888N (200lbs)
Maximum diffusion	500N
Pres Repellence	1700N
Strike Repellence	0.5N/M
Ferrule Type	Ceramic
Dielectric Withstand Test	100kpsi/689N/mm(IEC793-1B1)
Swing Test	300 Cycles
Minimum Curve Radius	25.4mm

Ordering Information

□□□/□□□-□□□-□M

1 2 3 4 5 6 7 8

1		2	
Connector Type			
FC	FC	P	PC
SC	SC	A	APC
ST	ST	U	UPC
LC	LC		
PT	Pigtail		
MJ	MT-RJ		

3		4	
Connector Type			
FC	FC	P	PC
SC	SC	A	APC
ST	ST	U	UPC
LC	LC		
PT	Pigtail		
MJ	MT-RJ		

5		6		7	
Fiber Mode		Cable Type			
S	Single-mode	D	Duplex	5	50/125um
M	Multi-mode	S	Simplex	6	62.5/125um
				9	9/125um

8
Cable Length
Meter =M□ (example 1Meter=1M)

Chapter 2.

G.SHDSL VDSL

4U Managed 16-Slot G.SHDSL.bis TDM Chassis

SHRM03b-TDM

The SHRM03b-CH chassis is a 4U 19(23)" rack that supports dual power and 16-slot for 2 wires dual channels, 4 wires single channel hot swappable cards for G.703 E1, T1, V.35 (RS-530/449/X.21) and bridged Ethernet. Utilizing industry standard SNMP protocol, the management feature can configure and monitor each local channel and the connected remote modems. In addition, RS-232 console and Telnet provide menu based management while embedded Web offers a user friendly graphical environment for OAM&P. This Rack is 100% compatible with our SHDTU03b standalone TDM based CPE modems for E1, serial data and Ethernet.

Features

- 4U 19(23)" 16-slot chassis
- Interface Cards for E1/T1, V.35, Ethernet (Bridge)
- Up to 30 ports per chassis (2 ports per card for 2 wires)
- Hot swappable
- Data rate 2 wire up to 5.7Mbps and 4 wire up to 11.4Mbps
- Adaptive rate feature maximizes data rate based on loop conditions
- Supports console terminal, Telnet, web and SNMP management
- Supports TFTP upgrade
- All interface connectors on the rear panel

Connectors

Console port (RJ45, RS232C)
WAN port RJ45 Jack (2-wire, 4-wire).

Physical Specifications

Dimensions: 178mm x 440mm x 315mm (W x D x H)
Weight: 7.9kg w/o P/S

Power Characteristics

AC : 90 ~ 230V AC 47/63Hz
DC : 24VDC, 48VDC, 72VDC

Environmental Specifications

Operating 0°C to 50°C
Storage -10°C to 70°C
Relative humidity 5% to 90% non-condensing
Predicted MTBF : 65,000 hrs (25°C)

Certification

FCC class A, VCCI class A, CE, RoHS

SHRM03b-TDM front view

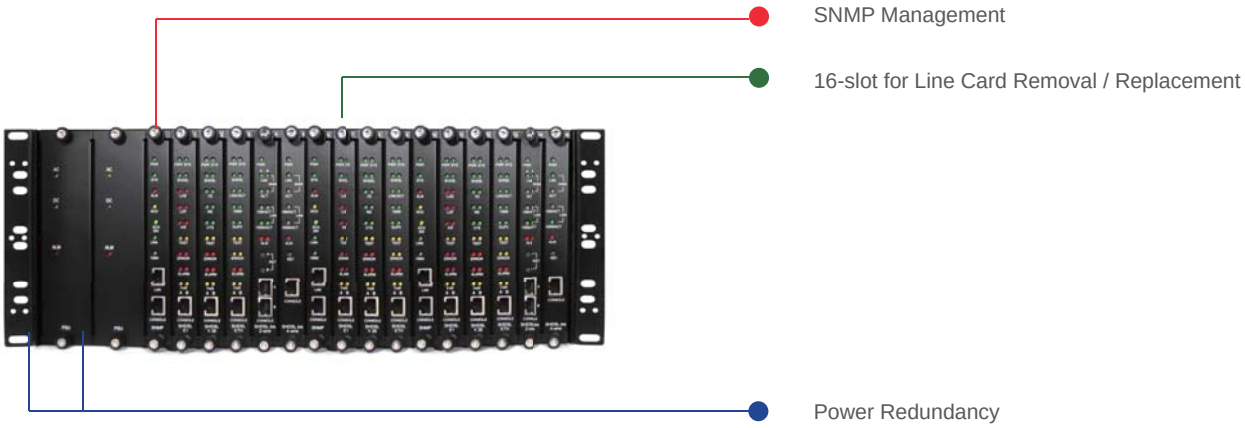

SHRM03b-TDM back view

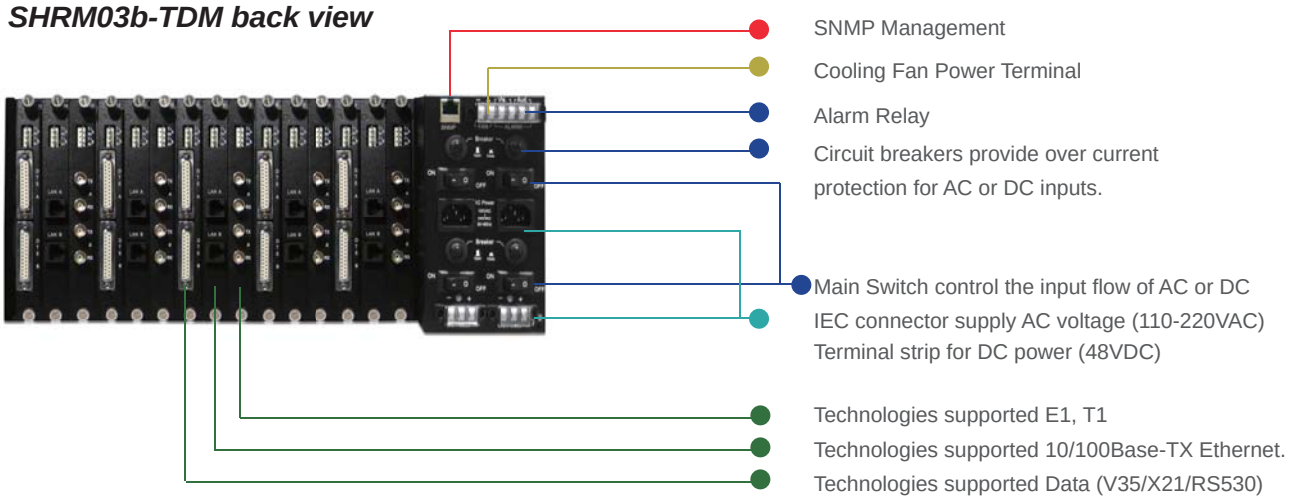

Power Redundancy

All the SHRM03b TDM chassis power supplies are hot swappable and modular, installing two into a chassis, provides redundancy should a single power supply fail. A fully loaded chassis can run continuously with only one power module fitted into the chassis.

Cooling Fan

The cooling fan unit is an optional component. In a stacked chassis scheme, where ambient temperature may be higher than 25C (77F), or the chassis is fully loaded with line cards, the fan option is recommended to keep cooler air moving through the chassis. The fan box is designed to be placed on top of the SHRM03b chassis and pulls warm air up and out
of the chassis, expelling it out the rear of the fan box. The cooling fan unit will add 1U rack space to the chassis for an overall total of 5U.

Network Management

The SHRM03b TDM chassis provides an SNMP Management card which must be installed into the SNMP slot of chassis. The SNMP card allows a network administrator with the ability to configure and monitor the status of the blades. Management can be achieved locally over RS232, or over the network by Telnet, Web or SNMP. The management module can also configure and monitor the status of a remote blade.

Protocol Supported

The SHRM03b TDM chassis has been designed as a Managed platform. This allows network administrators to deploy the chassis in a wide range of network. Technologies supported by the chassis included E1, T1, Data (V35/X21/RS530), and 10/100Base-TX Ethernet.

TDM Based

2Wires, 5.7Mbps 4 Wires, 11.4Mbps

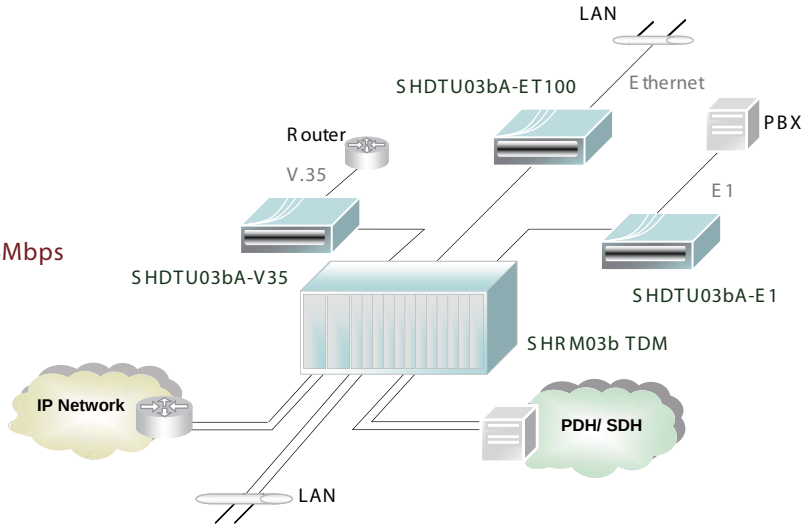

Ordering Information

SHRM03b-□□□□□ Chassis type

AD-CH : 4U 19" 15-slot chassis for AC+DC power
FAN : Chassis cooling fan tray
AD : AC 110V~220V + DC 36 ~72 V power card

Example: SHRM03b-AD-CH

SHRM03bA-□□□□□ Optional card

E1 : E1 card
T1 : T1 card
Data : V35,X21,RS530 card
ET100 : 10/100Base-TX card

Example:SHRM03bA-E1

SHRM03b-TDM Slide-in Card

Overview

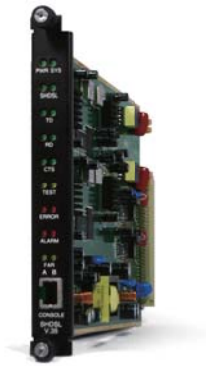

Data (V35/X21/RS530) card

- Supports V.35/RS-530 or V.36/X.21 over SHDSL
- Standard ITU G.991.2 (2004) supports improved reach, speed and interoperability
- Payload rates: Up to 5.696Mbps(for 2-wire model) or Up to 8.192Mbps(for 4-wire model)
- Local management interface with console
- Remote line loopback
- G.SHDSL.bis Line performance monitoring (data rate and SNR)
- Raw and per time interval statistics
- Connector : DB-25 female for V.35 cable
- Supports 2 wires / 2Ch or 4 wires / 1Ch per card

Ethernet card

- 10/100Mpbs Half/Full Duplex, Auto-sensing, Auto-Crossover
- Standard ITU G.991.2 (2004) supports improved reach, speed and interoperability
- Local management interface with console
- Remote line loopback
- G.SHDSL.bis Line performance monitoring (data rate and SNR)
- Raw and per time interval statistics
- Supports 2 wires / 2Ch or 4 wires / 1Ch per card
- Connector : RJ-45 Ethernet Interface
- Up to 1024 MAC address learning, filtering bridge

TDM Based 2Wires 2 Channels 5.7Mbps Application

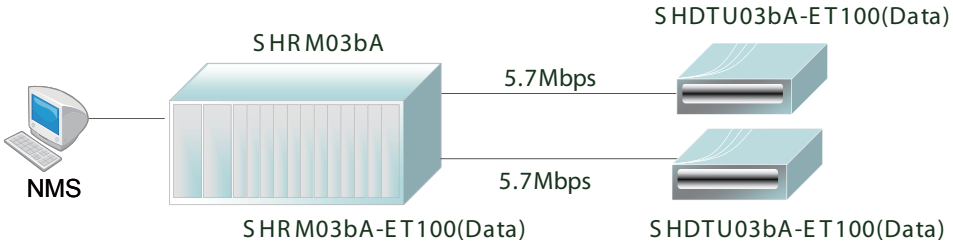

TDM Based 4Wires 1 Channels 11.4Mbps Application

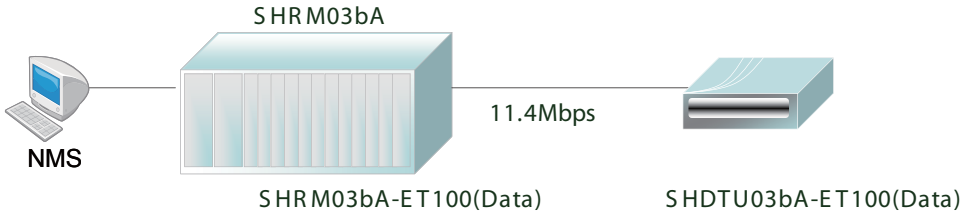

Ordering Information

SHRM03bA- □□□□□ Optional card

E1 : E1 card
T1 : T1 card
Data : V35,X21,RS530 card
ET100 : 10/100Base-TX card

Example:SHRM03bA-E1

Overview

SHRM03b-TDM Slide-in Card

E1 card

- Supports E1 and fractional E1 over SHDSL
- Connection: RJ-48C for balanced 120Ω E1 cable and BNC for unbalanced 75Ω E1 cable
- Line Rate : 2048KHz +/- 50ppm
- Line code: HDB3/AMI
- Framing : PCM30/PCM30C/PCM31/PCM31C and Unframed
- Data Rate : 64Kbps to 2.048Mbps (Nx64Kbps , N=1 to 32)
- Operation : Full E1 and Fractional E1
- Local management interface with console
- Remote line loopback
- E1 performance monitoring and alarm buffer
- G.SHDSL.bis Line performance monitoring (data rate and SNR)
- Raw and per time interval statistics
- Supports 2 wires / 2Ch or 4 wires / 1Ch per card

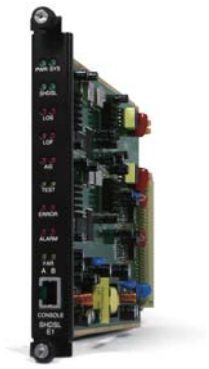

T1 card G.703 Interface (as T1)

- Connection: RJ-48C for balanced 100Ω T1 cable
- Line Rate : 1544KHz +/- 50ppm
- Line code: B8ZS
- Framing: SF/ESF/Unframed
- Data Rate : 64kbps to 1.536Mbps (N=1 to 24)
- Operation : Clear Channel and Factional T1
- Supports 2 wires / 2Ch or 4 wires / 1Ch per card
- Local management interface with console Remote line loopback
- T1 performance monitoring and alarm buffer
- G.SHDSL.bis Line performance monitoring (data rate and SNR)
- Raw and per time interval statistics
- Supports 2 wires / 2Ch or 4 wires / 1Ch per card

TDM Based 2Wires 2 Channels 5.7Mbps Application

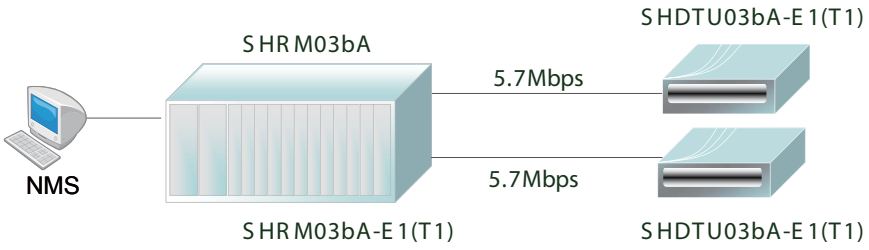

TDM Based 4Wires 1 Channels 11.4Mbps Application

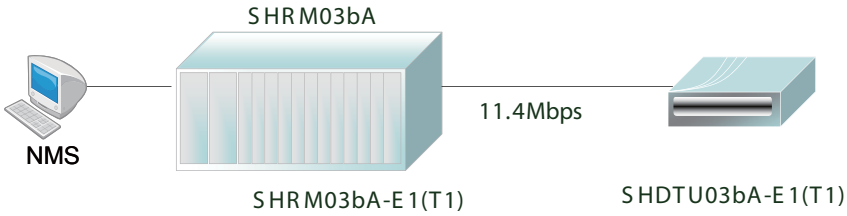

TDM G.SHDSL.bis 2/4 Wire 5.7M/11.4M E1 NTU

SHDTU03b-E1

The CTC SHDTU03 family of G.SHDSL TDM based modems is a telecom product for carriers or SME users. The SHDTU03-E1 offers an ITU-T G.703 DTE interface which works over an SHDSL interface. The modem supports two different connectors for G.703 E1 application (balanced 120 Ohm RJ45 or unbalanced 75 Ohm dual BNCs) at bit rates from 64kbps to 2.048Mbps. The SHDTU03b-E1 can be configured and managed via EOC, or menu-driven VT100 compatible Async. terminal Interface, either

Features

- Supports E1 and fractional E1 over SHDSL
- Standard ITU G.991.2
- Fast and cost-effective services of voice or TDM on a single or two wire pair of existing copper loop infrastructure
  Wetting current to protect copper line (optional)
- Local management interface with console
- Remote line loopback
- E1 performance monitoring and alarm buffer
- G.SHDSL Line performance monitoring (data rate and SNR)
- Raw and per time interval statistics

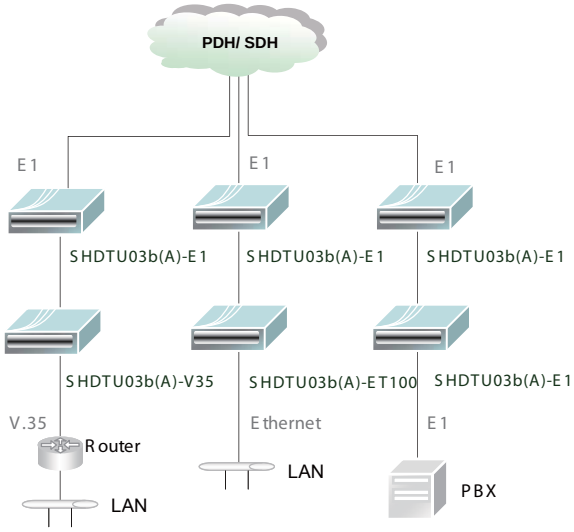

SHDSL Interface	• Line code : 16 level Trellis coded PAM • Line data rate : User selectable from 64kbps to 2.304Mbps • Support : ANSI (Annex A) and ETSI (Annex B) • Support wetting current : 4mA-20mA and alarm on failure • Compliance: ITU-T G.991.2

E1 Interface	• Line code: HDB3/AMI
	• Data rate: 64kbps to 2048kbps
	• Operation: full or fractional
	• Impedance:
	120 ohms balanced / 75 ohms unbalanced
	• Framing: structured with or without CRC-4 or unstructured
	• Timing: internal, and G.703
	• Compliance: ITU-T G.703, G.704, G.706, G.821, G.823, G.826, CTR12
	• Transmit level
	  • Pulse amplitude:
	  Nominal 2.37V+10% for 75 ohm /
	  Nominal 3.00V+10% for 120 ohm
	  • Zero amplitude: +0.1V
	• Transmit frequency tracking
	  • Internal timing :+/- 30ppm
	  • Loopback timing :+/- 50ppm
	  • External timing :+/- 100ppm
	• Jitter performance : ITU-T G.823
	• Interface connections : BNC for unbalanced, 5 pin wire connector for balanced

Performance	• SHDSL PM : ES-crc, SES-crc, UAS, LOSW seconds • E1 PM : ES, SES, UAS seconds • Current 15-minute period and 96 previous 15-minute periods of SHDSL and E1 performance parameters
Diagnostic	E1 line loopback / Local SHDSL loopback / Remote SHDSL loopback / Remote payload loopback
Management	• Configuration with keypads and LCD display • Console port (RJ45 , RS232) • Support firmware upgradeable
Indications	LEDs (PWR, SHDSL, FE1, LOF, LOS, TEST, LOOP, ALARM, and FAR ALARM)
Power Input	AC Input: 100~240VAC DC Input: -36 ~ 72VDC
Power Consumption	10W
Dimensions	168 x 195 x 48mm (D x W x H)
Weight	850g
Temperature	0~50°C (Operating) ,-10~70°C (Storage)
Humidity	10~90% non-condensing
Certification	CE, FCC, RoHS
MTBF	57,000 hrs (25°C)

Ordering Information

SHDTU03b(A)- E1-□□□□□ Power type

AD : AC+DC power

Example: SHDTU03b-E1-AD
SHDTU03bA-E1-AD

TDM G.SHDSL.bis 2/4 Wire 5.7M/11.4M E1/T1 NTU

SHDTU03b-E1/T1

The CTC SHDTU03b family of G.SHDSL.bis TDM based modems is a telecom product for carriers or SME users. In one device, the SHDTU03b-E1/T1 offers two selectable DTE I/Fs (E1 or T1) for convenient use in North America or the rest of the world. The user-configurable interfaces provide flexible application for various connections. The modem supports different connectors for G.703 E1 / T1application (balanced 120 Ohm E1 or 100 Ohm T1 RJ45, unbalanced 75 Ohm dual BNCs) at bit rates from 64kbps to 2.048Mbps for E1 or 1.544Mbps for T1. The data rate of G.SHDSL.bis may be up to 5.7Mbps with one pair copper wire or 11.4Mbps with two pairs. At the reduced rate for E1/T1, these copper lines can be extended further. The SHDTU03b-E1/T1 can be configured and managed via EOC, or menu-driven VT100 compatible Async. Terminal Interface, either locally or remotely.

Features

- E1, T1 Interface G.SHDSL modem
- Supports fractional E1/T1 Nx64 over SHDSL
- Standard ITU G.991.2 (2004) supports improved reach, speed and interoperability compared to conventional G.shdsl
- Fast and cost-effective services of voice, TDM and data on a single or two wire pair of existing copper loop infrastructure
- Local management interface with console
- Remote line loopback
- E1/T1 performance monitoring and alarm buffer
- G.SHDSL.bis Line performance monitoring (data rate and SNR)
- Raw and per time interval statistics

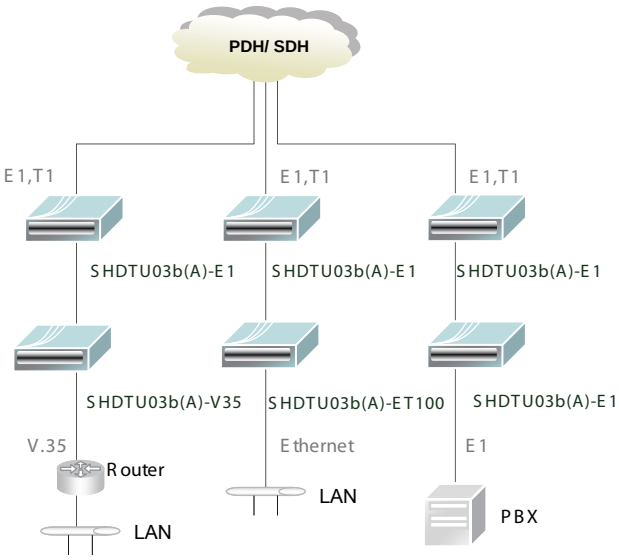

WAN Interface	Line Rate	ITU G.991.2 (2004)
	Coding	trellis coded pulse amplitude modulation(TC-PAM16 and TC-PAM32)
	Support	Annex A ,B , F and G
	Payload rates	
	64Kps to 5.696Mbps (N=1 to 89) for 2-wire model.	
	128Kbps to11.392Mbps (N=1 to 172) for 4-wire model	
	Connection	RJ-45 jack (2-wire or 4-wire)
	Impedance	135 ohms
E1/T1 Interface	Connection	RJ-45 for balanced 120Ω E1, 100Ω T1 for twisted pair cable or BNC for coaxial unbalanced 75Ω E1
	Line Rate	E1: 2048KHz +/- 50ppm , T1: 1.544Mbps
	Framing	PCM30/PCM30C/PCM31/PCM31C and Unframed T1 framing?
	Data Rate	64Kbps to 2.048Mbps (Nx64Kbps , N=1 to 32)
	Operation	Full E1/T1 and Fractional E1/T1
Indications	LEDs (Power, Alarm, Test, SYNC, Error, LBK, E1,T1)	
DSL Timing	Internal:From E1/T1 Recovery (as E1/T1)	
Performance Monitoring	ES, SES, UAS, LOWS, Alarms and Errors	
Loopback Tests	E1/T1 interface only • Local Digital Loopbacka • Local Loopback • Remote Line Loopback • Remote Payload Loopback • Far-end Line Loopback • Far-end Payload Loopback • Build-in 2047(211-1) bit BER tester	
Management	• Configuration with keypads and LCD display • Console port (RJ45 , RS232C) • Support firmware upgradeable	
Power Input	AC Input: 100~240VAC, DC Input: -36 ~ 72VDC	
Power Consumption	< 10W	
Dimensions	168 x 195 x 48 mm(D x W x H)	
Weight	850g	
Temperature	0 ~ 50°C (Operating), -10 ~ 70°C (Storage)	
Humidity	10 ~90% non-condensing	
Certifcation	CE, FCC, RoHS	
MTBF	70,000 hrs (25°C)	

Ordering Information

SHDTU03b(A)- E1/T1-□□□□□ Power type

AD : AC+DC power

Example: SHDTU03b-E1/T1-AD
SHDTU03bA-E1/T1-AD

TDM G.SHDSL.bis 2/4 Wire 5.7M/11.4M (V35/X21/RS530) NTU

SHDTU03b-Data

The CTC SHDTU03b family of G.SHDSL.bis TDM based modem is a telecom product for carriers or SME users. The SHDTU03b-V35 offers a V.35 DTE interface which works over an SHDSL interface. The V.35 interface provides high-speed TDM services by way of a DB25 I/F and adapter cable. The factory selected RS-530 interface will electrically support RS-530, X.21and RS-449 with appropriate adapter cable. The data rate of DB25 I/F may be up to 5.696Mbps within one pair copper wires or 11.392Mbps within two pairs copper wires. The SHDTU03b-V35 can be configured and managed via EOC, or menu-driven VT100 compatible Async. terminal Interface, either locally or remotely.

Features

- Supports Nx64 V.35, X21, RS530, and RS449 over SHDSL
- Standard ITU G.991.2 (2004) supports improved reach, speed and interoperability compared to conventional G.shdsl
- Fast and cost-effective services of TDM on a single or two wire pair of existing copper loop infrastructure
- Wetting current to protect copper line (optional)
- Local management interface with console
- Remote line loopback
- G.SHDSL.bis Line performance monitoring (data rate and SNR)
- Raw and per time interval statistics

WAN Interface	Line Rate	ITU G.991.2 (2004)
	Coding	trellis coded pulse amplitude modulation (TC-PAM16 and TC-PAM32)
	Support	Annex A ,B , F and G
	Payload	64Kps to 5.696Mbps (N=1 to 89) for 2-wire model.
	rate	128Kbps to11.392Mbps (N=1 to 172) for 4-wire model
	Connection	RJ-45 jack (2-wire or 4-wire)
	Impedance	135 ohms
Data Interface	Payload rates	Up to 5.696Mbps(for 2-wire model) or Up to 8.192Mbps(for 4-wire model)
	Support	V.35/RS-530 or V.36/X.21
Indications		LEDs (Power, Alarm, Test, SYNC, Error, LBK, TD, RD)
DSL Timing		• Internal • From DTE (as V.35 and Ethernet)
Performance Monitoring		ES, SES, UAS, LOWS, Alarms and Errors
Loopback Tests		• Local Digital Loopback • Local Loopback • Remote Line Loopback • Remote Payload Loopback • Far-end Line Loopback • Far-end Payload Loopback • V.54 Loopback (for V.35 interface) • Build-in 2047(211-1) bit BER tester
Management		• Configuration with keypads and LCD display • Console port (RJ45 , RS232) • Support firmware upgradeable
Power Input		AC Input: 100~240V DC Input: -36 ~ 72V Dual power Input:100~ 240VAC, -36 ~ -72VDC
Power Consumption		< 10W
Dimensions		168 x 195 x 48mm (D x W x H)
Weight		850g
Temperature		0 ~ 50°C (Operating), -10 ~ 70°C (Storage)
Humidity		10~90% non-condensing
Certification		CE, FCC, RoHS
MTBF		70,000 hrs (25°C)

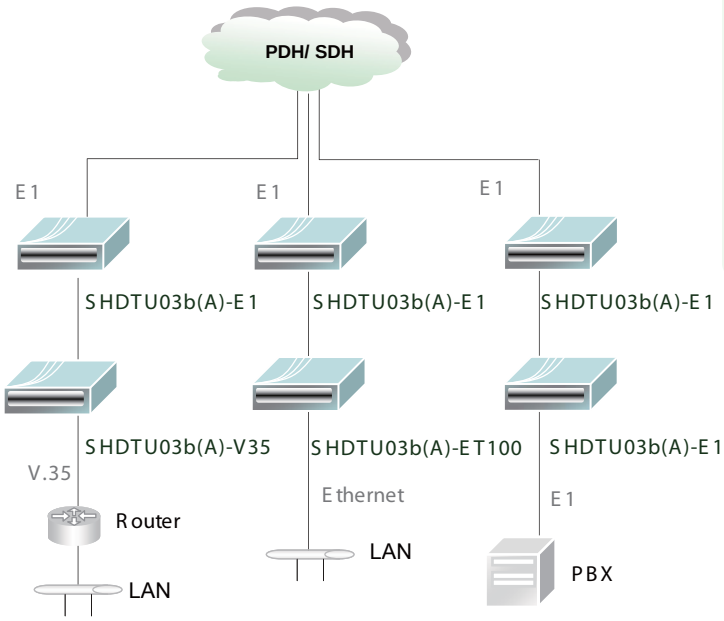

Ordering Information

SHDTU03b(A)-Data-□□□□□ Power type

AD : AC+DC power

Example: SHDTU03b-Data-AD
SHDTU03bA-Data-AD

2/4 Wire G.SHDSL.bis TDM (Bridge) NTU

SHDTU03b-ET100

The CTC SHDTU03 family of G.SHDSL TDM based modems is a telecom product for carriers or SME users. The SHDTU03-ET100 offers a 10/100Base-TX interface which works over an SHDSL interface. The Ethernet interface provides Ethernet over TDM services by way of a HDLC encapsulation and RJ-45 connector. The data rate of Ethernet I/F may be up to 2.304Mbps with one pair copper wires. The SHDTU03-ET100 can be configured and managed via EOC, or menu-driven VT100 compatible Async. terminal Interface, either locally or remotely.

SHDSL Interface	• Line code : 16 level Trellis coded PAM • Line data rate : User selectable from 64kbps to 2.304Mbps • Support : ANSI (Annex A) and ETSI (Annex B) • Support wetting current : 4mA-20mA and alarm on failure • Compliance: ITU-T G.991.2
Ethernet Interface	• Supports 10/100Base-T auto sensing half/full duplex • Complied with IEEE 802.3/IEEE 802.3u • Operates as a self-learning bridge in transparent mode • Supports up to 128 MAC learning addresses • Supports bridge filter function
Performance Management	• SHDSL PM : ES-crc, SES-crc, UAS, LOSW seconds • Configuration with keypads and LCD display • Console port (RJ45 , RS232) • Support firmware upgradeable
Indications	LEDs (PWR, SHDSL, 10M/ACT, 100M/ACT, COL, TEST, LOOP, ALARM, and FAR ALARM)
Power Input	AC Input : 100~240VAC DC Input : -36 ~ 72VDC
Power Consumption	< 10W
Dimensions	168 x 195 x 48mm (D x W x H)
Weight	850g
Temperature	0 ~ 50°C (Operating), -10 ~ 70°C (Storage)
Humidity	10~90% non-condensing
Certification	CE, FCC, RoHS
MTBF	57,000 hrs (25°C)

Features

- Supports 10Base-T and 100Base-TX over SHDSL
- Standard ITU G.991.2
- Fast and cost-effective services of data on a single or two wire pair of existing copper loop infrastructure
- Wetting current to protect copper line (optional)
- Local management interface with console
- Remote line loopback
- G.SHDSL Line performance monitoring (data rate and SNR)
- Raw and per time interval statistics

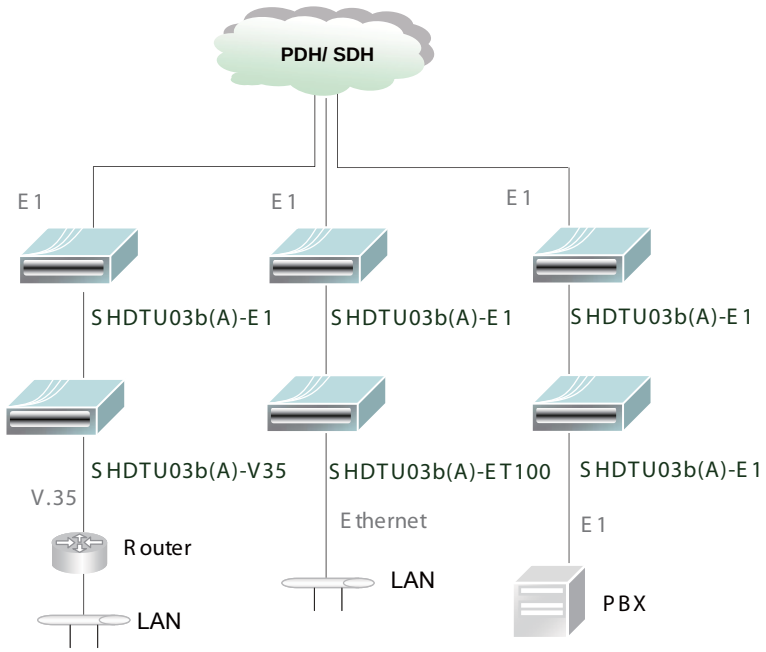

Ordering Information

SHDTU03b(A)-ET100-□□□□□ Power type

AD : AC+DC power

Example: SHDTU03b-ET100-AD
SHDTU03bA-ET100-AD

2/4 G.SHDSL.bis TDM(E1,V35,LAN) SNMP NTU

SHDTU03b-31

The CTC SHDTU03b family of G.SHDSL.bis TDM based modem is a telecom product for carriers or SME users. In one device, the SHDTU03b-31 offers three DTE I/Fs (E1, V.35, and Ethernet), which can work simultaneously to share DSL bandwidth. The user-configurable interfaces provide flexible application for various connections. The modem supports two different connectors for G.703 E1 application (balanced 120 Ohm RJ45 or unbalanced 75 Ohm dual BNCs) at bit rates from 64kbps to 2.048Mbps. The V.35 interface provides high-speed TDM services by way of a DB25 I/F and adapter cable. The factory selected RS-530 interface will electrically support RS-530, X.21and RS-449 with appropriate adapter cable. The data rate of DB25 I/F may be up to 5.696Mbps within one pair copper wires or 8.192Mbps within two pairs copper wires. The modem provides 10/100Mbps auto-negotiated Fast Ethernet via an RJ45 LAN connector, which offers customer premise high-speed LAN over TDM services. The SHDTU03b-31 can be configured and managed via EOC, or menu-driven VT100 compatible Async. terminal Interface, either locally or remotely.

Features

- 3-in-1 dot bis modem
- Supports E1, fractional E1, Nx64 V.35, X21, RS530, RS449 and Ethernet over SHDSL
- Standard ITU G.991.2 (2004) supports improved reach, speed and interoperability compared to conventional G.shdsl
- Fast and cost-effective services of voice, TDM and data on a single or two wire pair of existing copper loop infrastructure
- Wetting current to protect copper line (optional)
- Local management interface with console
- Remote line loopback
- E1 performance monitoring and alarm buffer
- G.SHDSL.bis Line performance monitoring (data rate and SNR)
- Raw and per time interval statistics

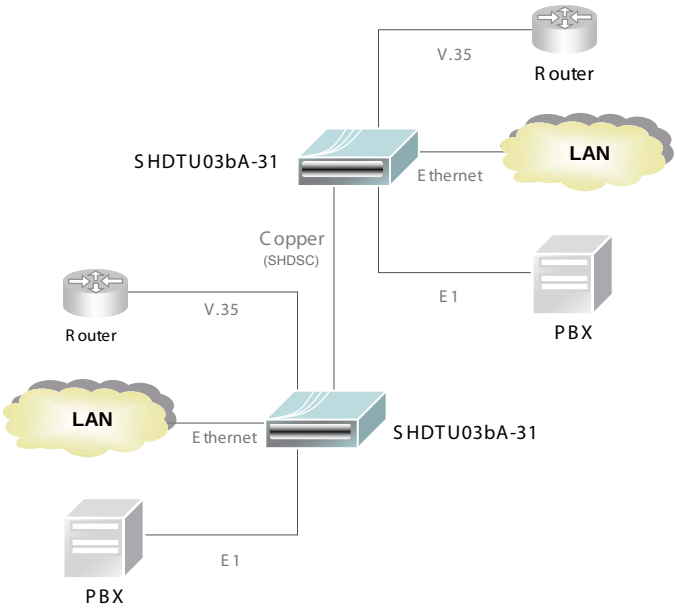

WAN Interface	Line Rate	ITU G.991.2 (2004)
	Coding	Trellis coded pulse amplitude modulation (TC-PAM16 and TC-PAM32)
	Support	Annex A ,B , F and G
	Payload rates	64Kps to 5.696Mbps (N=1 to 89) for 2-wire model. 128Kbps to11.392Mbps (N=1 to 172) for 4-wire model
	Connection	RJ-45 jack (2-wire or 4-wire)
	Impedance	135 ohms
G.703 Interface (as E1)	Connection	RJ-45 for balanced 120Ω E1 cable and BNC for unbalanced 75Ω E1 cable
	Line Rate	2048KHz +/- 50ppm
	Framing	PCM30/PCM30C/PCM31/PCM31C and Unframed
	Data Rate	64Kbps to 2.048Mbps (Nx64Kbps , N=1 to 32)
	Operation	Full E1 and Fractional E1
Data Interface (as RS-530/V.35/X.21)		• Payload rates: Up to 5.696Mbps(for 2-wire model) or Up to 8.192Mbps(for 4-wire model) • Support V.35/RS-530 or V.36/X.21
LAN Interface (as Ethernet)		• Single Ethernet Interface • 10/100Mpbs Half/Full Duplex, Auto-sensing, Auto-Crossover • Up to 1024 MAC address learning, filtering bridge
Indications		LEDs (Power, Alarm, Test, SYNC, Error, LBK, E1, Data, Eth)
DSL Timing		• Internal • From E1 Recovery (as E1) • From DTE (as V.35 and Ethernet)
Performance Monitoring		ES, SES, UAS, LOWS, Alarms and Errors
Loopback Tests		E1 and V.35 interface only • Local Digital Loopback • Local Loopback • Remote Line Loopback • Remote Payload Loopback • Far-end Line Loopback • Far-end Payload Loopback • V.54 Loopback (for V.35 interface) • Build-in 2047(211-1) bit BER tester
Management		• Configuration with keypads and LCD display • Console port (RJ45 , RS232C) • Support firmware upgradeable
Power Input		AC Input: 100~240VAC, DC Input: -36 ~ 72VDC Dual power Input:100~ 240VAC, -36 ~ -72VDC
Power Consumption		< 10W
Dimensions		168 x 195 x 48mm (D x W x H)
Weight		850g
Temperature		0 ~ 50°C (Operating), -10 ~ 70°C (Storage)
Humidity		10~90% non-condensing
Certification		CE, FCC, RoHS
MTBF		70,000 hrs (25°C)

Ordering Information

SHDTU03b(A)-31-□□□□□ Power type

AD : AC+DC power

Example: SHDTU03b-31-AD
SHDTU03bA-31-AD

2/4 G.SHDSL.bis TDM(E1/T1,V35,LAN) SNMP NTU

SHDTU03b-31T

The CTC SHDTU03b family of G.SHDSL.bis TDM based modem is a telecom product for carriers or SME users. In one device, the SHDTU03b-31T offers three DTE I/Fs (E1/T1, V.35, and Ethernet), which can work simultaneously to share DSL bandwidth. The user-configurable interfaces provide flexible application for various service connections. The modem supports two different connectors for G.703 E1 / T1applications (balanced 120 Ohm E1 or 100 Ohm T1 RJ45, unbalanced 75 Ohm dual BNCs) at bit rates from 64kbps to 2.048Mbps. The V.35 interface provides high-speed TDM services by way of a DB25 I/F and adapter cable. The factory selected RS-530 interface will electrically support RS-530, X.21and RS-449 with appropriate adapter cable. The data rate of DB25 I/F may be up to 5.7Mbps within one pair copper wires or 11.4Mbps within two pairs copper wires. The modem provides 10/100Mbps auto-negotiated Fast Ethernet via an RJ45 LAN connector, which offers customer premise high-speed LAN over TDM services. The SHDTU03b-31T can be configured and managed via EOC, or menu-driven VT100 compatible asynchronous terminal Interface, either locally or remotely.

Features

- Multi-Interface (E1/T1, V35, Ethernet) G.SHDSL.bis modem
- Supports fractional E1/T1 Nx64 V.35, X21, RS530, RS449 and Ethernet over SHDSL, all at the same time
- Standard ITU G.991.2 (2004) supports improved reach, speed and interoperability compared to conventional G.shdsl
- Fast and cost-effective services of voice, TDM and data on a single or two wire pair of existing copper loop infrastructure
- Local management interface with console
- Remote line loopback
- E1/T1 performance monitoring and alarm buffer
- G.SHDSL.bis Line performance monitoring (data rate and SNR)
- Raw and per time interval statistics

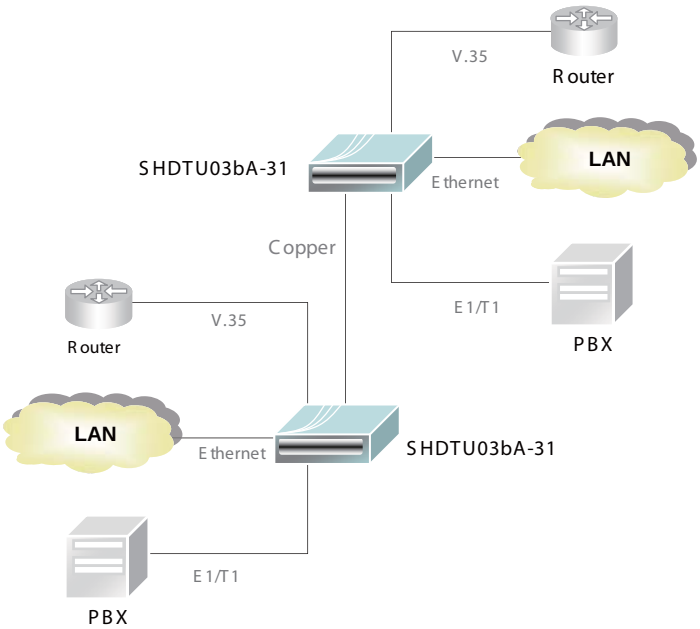

WAN Interface	Line Rate	ITU G.991.2 (2004)
	Coding	trellis coded pulse amplitude modulation(TC-PAM16 and TC-PAM32)
	Support	Annex A ,B , F and G
	Payload rates	192Kps to 5.696Mbps (N=3 to 89) for 2-wire model. 384Kbps to11.392Mbps (N=6 to 172) for 4-wire model
	Connection	RJ-45 jack (2-wire or 4-wire)
	Impedance	135 ohms
E1/T1 Interface	Connection	RJ-45 for balanced 120Ω E1, 100Ω T1 cable and BNC for unbalanced 75Ω E1 cable
	Line Rate	E1: 2048KHz +/- 50ppm , T1: 1.544Mbps
	Framing	PCM30/PCM30C/PCM31/PCM31C and Unframed
	Data Rate	64Kbps to 2.048Mbps (Nx64Kbps , N=1 to 32)
	Operation	Full E1/T1 and Fractional E1/T1
Data Interface	Payload rates	Up to 5.696Mbps(for 2-wire model) or Up to11.4Mbps(for 4-wire model)
	Support	V.35 orRS-530/V.36/X.21
LAN Interface		10/100Mbps RJ45 Interface Half/Full Duplex, Auto-sensing, Auto-Crossover Up to 1024 MAC address learning, filtering bridge Standard HDLC WAN encapsulation
Indications		Power, Alarm, Test, SYNC, Error, LBK, E1, Data, Eth
DSL Timing		Internal • From E1/T1 Recovery (as E1/T1) • From DTE (as V.35 and Ethernet)
Performance Monitoring		ES, SES, UAS, LOWS, Alarms and Errors
Loopback Tests		E1/T1 and V.35 interface only • Local Digital Loopback • Local Loopback • Remote Line Loopback • Remote Payload Loopback • Far-end Line Loopback • Far-end Payload Loopback • V.54 Loopback (for V.35 interface) • Build-in 2047 pattern BER tester
Management		• Configuration with keypads and LCD display • Console port (RJ45 , RS232C) • Supports firmware upgrade
Power Input		AC Input: 100~240VAC, DC Input: -36 ~ 72VDC
Power Consumption		< 10W
Dimensions		168 x 195 x 48 mm(D x W x H)
Weight		850g
Temperature		0 ~ 50°C (Operating), -10 ~ 70°C (Storage)
Humidity		10 ~90% non-condensing
Certifcation		CE, FCC, RoHS
MTBF		70,000 hrs (25°C)

Ordering Information

SHDTU03b(A)-31T- □□□□□ Power type

AD : AC+DC power

Example: SHDTU03b-31T-AD
SHDTU03bA-31T-AD

4U Managed 15-Slot G.SHDSL.bis ATM Chassis

SHRM03b-ATM

The SHRM03b-CH chassis is a 4U 19(23)" rack that supports dual power and 15 slots for dual channel, hot swappable ET100R Bridge/Router Ethernet cards. The SHDTU03b-ET100R ATM card series are G.SHDSL 2-wire/ 4-wire routers which comply with G.991.2 & G.994.1 standards. The SHDTU03b family provides business-class, multi-range 192Kbps to 5.696/11.392Mbps payload rates over existing single pair or two pairs copper wire. The SHDTU03b is designed not only to optimize the service bit rate from central office to customer premises but also integrates high-end Bridging/ Routing capabilities with advanced functions such as Multi-DMZ, virtual server mapping and VPN. pass-through. The SHDSL.bis router allows customers to leverage the latest in broadband technologies to meet their growing data communication needs.

Features

- 4U 19(23)" 15-slot chassis
- Interface Cards for Ethernet (Bridge & Routing)
- Up to 30 ports per chassis (2 ports per card for 2 wire model)
- Hot swappable
- Data rate 2 wire up to 5.7Mbps and 4 wire up to 11.4Mbps
- Adaptive rate feature maximizes data rate based on loop conditions
- All interface connectors on the rear panel

Connectors

Console port (RJ45, RS232C)
WAN port RJ45 Jack (2-wire, 4-wire).

Physical Specifications

Dimensions: 178mm x 440mm x 315mm (W x D x H)
Weight: 7.9kg w/o P/S

Power Characteristics

AC : 90 ~ 230V AC 47/63Hz
DC : 24VDC, 48VDC, 72VDC

Environmental Specifications

Operating 0°C to 50°C
Storage -10°C to 70°C
Relative humidity 5% to 90% non-condensing
Predicted MTBF : 65,000 hrs (25°C)

Certification

FCC class A, VCCI class A, CE, RoHS

SHRM03b-ATM front view

15 slots for Line Card Removal / Replacement

Power Redundancy

SHRM03b-ATM back view

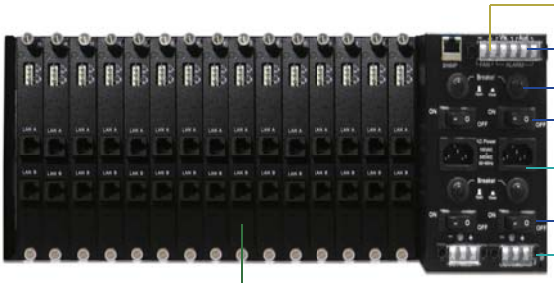

Cooling Fan Power Terminal

Alarm Relay

Circuit breakers provide over current protection for AC or DC inputs.

Main Switch control the input flow of AC or DC

IEC connector supply AC voltage (110-220VAC)

Terminal strip for DC power (48VDC)

Technologies supported 10/100Base-TX Ethernet.

Power Redundancy

All the SHRM03b ATM chassis power supplies are hot swappable and modular, installing two into a chassis, provides redundancy should a single power supply fail. A fully loaded chassis can run continuously with only one power module fitted into the chassis.

Cooling Fan

The cooling fan unit is an optional component. In a stacked chassis scheme, where ambient temperature may be higher than 25C (77F), or the chassis is fully loaded with line cards, the fan option is recommended to keep cooler air moving through the chassis. The fan box is designed to be placed on top of the SHRM03b chassis and pulls warm air up and out
of the chassis, expelling it out the rear of the fan box. The cooling fan unit will add 1U rack space to the chassis for an overall total of 5U.

Protocol Supported

The SHRM03b ATM chassis has been designed as a Managed platform. This allows network administrators to deploy the chassis in a wide range of network. Technologies supported 10/100Base-TX Ethernet Router.

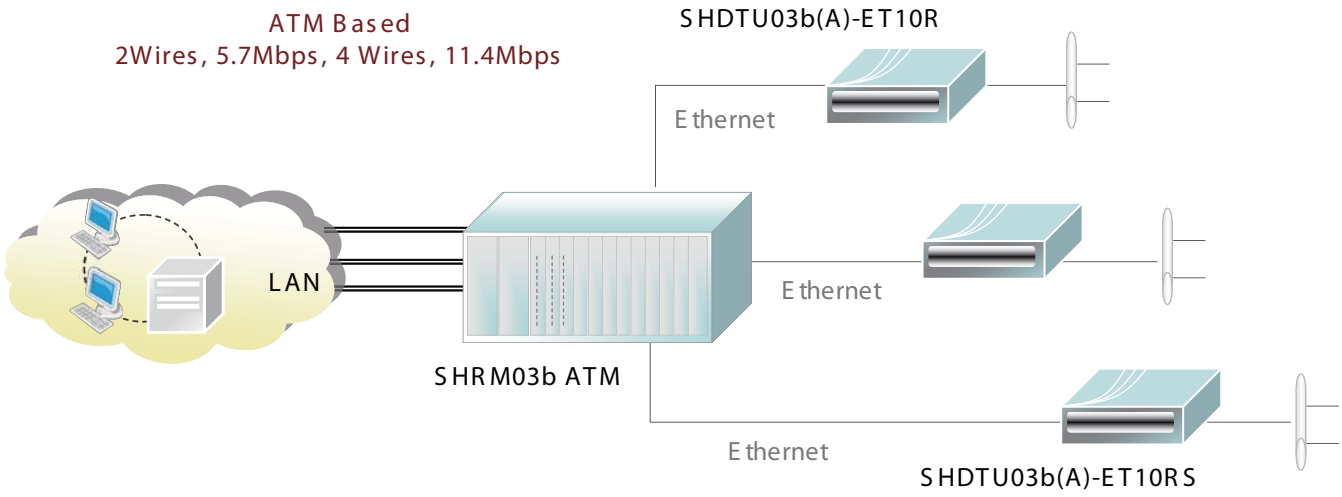

Ordering Information

SHRM03b-□□□□□ Chassis type

AD-CH : 4U 19" 15-slot chassis for AC+DC power
FAN : Chassis cooling fan tray
AD : AC 110V~220V + DC 36 ~72 V power card

Example: SHRM03b-AD-CH

SHRM03b(A)-□□□□□ Optional card

ET100R : 10/100TX router card

Example: SHRM03b-ET100R
SHRM03bA-ET100R

G.SHDSL.bis ATM Ethernet Dual Channel Slide-in Card

SHRM03b-ET100R, SHRM03bA-ET100R

The SHDTU03b-ET100R is a dual channel ATM G.SHDSL 2-wire/ 4-wire router card which comply with G.991.2 & G.994.1 standards. The SHDTU03 family provides business-class, multi-range 192Kbps to 5.696/11.392Mbps payload rates over existing single pair or two pairs copper wire. The SHDTU03b is designed not only to optimize the service bit rate from central office to customer premises but also integrates high-end Bridging/ Routing capabilities with advanced functions such as Multi-DMZ, virtual server mapping and VPN pass-through. The SHDSL.bis router allows customers to leverage the latest in broadband technologies to meet their growing data communication needs. This card is 100% compatible with our SHDTU03b standalone ATM based CPE Bridge/Router modems.

Data rate 2 wire up to 5.7Mbps

Features

- Supports Ethernet over ATM over SHDSL
- Full ATM protocol stack implementation over G.SHDSL
- Adaptive rate installation maximizes data rate based on loop conditions
- Standard ITU G.991.2 (2004) supports improved reach, speed and interoperability compared to conventional G.shdsl
- Supports point-to-point configurations
- Data rate 2 wire up to 5.7Mbps and 4 wire up to 11.4Mbps
- Local management interface via console port
- Intuitive Web based management
- SNMP management with SNMPv1/v2 and MIB II
- Efficient IP routing and transparent learning bridge to support broadband Internet services
- VPN pass-through for safeguarded connections
- Build-in advanced SPI firewall (Firewall routers)
- DMZ host/Multi-DMZ/Multi-NAT; multiple PCs on a LAN with only one IP address
- PPPoA and PPPoE support user authentication with PAP/CHAP/MSCHAP
- SHDSL Line performance monitoring
- Raw and time stamped statistics
- Supports firmware upgrade via web interface

Data rate 4 wire up to 11.4Mbps

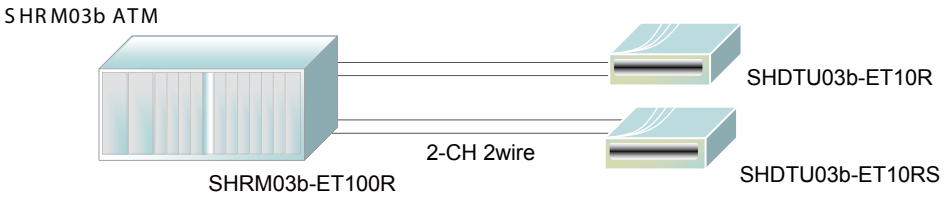

Ordering Information

SHRM03b(A)-□□□□□ Optional card

ET100R : 10/100TX router card

Example: SHRM03b-ET100R
SHRM03bA-ET100R

Single Port, 2-wire (5.7Mbps) G.SHDSL.bis ATM/EFM TR069 Bridge/Router

SHDTU03b-ET10R(S)

The SHDTU03b-ET10R is a G.SHDSL bis Bridge/Router in 2-wire or 4-wire which complies with G.991.2 (2004) standards and has an optional built-in four port 10Base-T /100Base-TX auto-negotiation and auto-MDIX switch. The SHDTU03b family provides business-class, multi-range 192Kbps to 5.7Mbps (2-wire) or 384Kbps to 11.4Mbps (4-wire) payload rates over existing single or two pair copper wire. SHDTU03b-ET10R is designed not only to optimize the service bit rate from central office to customer premises but also integrates high-end Bridging/ Routing capabilities with advanced functions such as Multi-DMZ, virtual server mapping and VPN pass-through. The G.SHDSL.bis router allows customers to leverage the latest in broadband technologies to meet their growing data communication needs. In bridge mode, the four switching ports may be configured for IEEE802.1Q VLAN or port based VLAN applications. The modem can be configured in either central or client mode providing a point-to-point solution.

Features

- Supports Ethernet over ATM over SHDSL
- Full ATM protocol stack implementation over G.SHDSL
- Adaptive rate installation maximizes data rate based on loop conditions
- Standard ITU G.991.2 (2004) supports improved reach, speed and interoperability compared to conventional G.shdsl
- Supports point-to-point configurations
- Data rate 2 wire up to 5.7Mbps and 4 wire up to 11.4Mbps
- Local management interface via console port
- Intuitive Web based management
- SNMP management with SNMPv1/v2 and MIB II
- Efficient IP routing and transparent learning bridge to support broadband Internet services
- VPN pass-through for safeguarded connections
- Build-in advanced SPI firewall (Firewall routers)
- DMZ host/Multi-DMZ/Multi-NAT; multiple PCs on a LAN with only one IP address
- PPPoA and PPPoE support user authentication with PAP/CHAP/MSCHAP
- SHDSL Line performance monitoring
- Raw and time stamped statistics
- Supports firmware upgrade via web interface

Ports	LAN Interface : • 10Base-T /100 Base-TX auto-negotiation • Auto-MDIX Hardware Interface : • WAN: RJ-45 • LAN: RJ-45 • Console port: RS232 • RST: Reset button for factory default WAN Interface : • SHDSL: ITU-T G.991.2 2004(Annex A/B/F/G) • Encoding scheme: TC-PAM16, TC-PAM32 • Data Rate: N x 64Kbps (N=3~89) • Impedance: 135 ohm
ATM	• Up to 8 PVCs • OAM F4/F5 loopback test • AAL5
ATM QoS	• UBR (Unspecified Bit Rate) • CBR (Constant Bit Rate) • VBR-rt (Variable Bit Rate Real Time) • VBR-nrt (Variable Bit Rate Non-real Time)
AAL5 Encapsulation	• VC multiplexing and SNAP/LLC • Ethernet over ATM (RFC 2684/1483) • PPP over ATM (RFC 2364) • Classical IP over ATM (RFC 1577)
PPP	• PPP over Ethernet for fixed and dynamic IP (RFC 2516) • PPP over ATM for fixed and dynamic IP (RFC 2364) • User authentication with PAP/CHAP/MS-CHAP
Routing	• Support IP/TCP/UDP/ARP/ICMP/IGMP protocols • IP routing with static routing and RIPv1/RIPv2 (RFC1058/2453) • IP multicast and IGMP proxy (RFC1112/2236) • Network address translation (NAT/PAT) (RFC1631) • NAT ALGs for ICQ/Netmeeting/MSN/ Yahoo Messenger • DNS relay and caching (RFC1034/1035) • DHCP server, client and relay (RFC2131/2132)

Bridging	• IEEE 802.1D Transparent Bridging • IEEE 802.1q VLAN • Port-based VLAN
Security	• DMZ host/Multi-DMZ/Multi-NAT function • Virtual server mapping (RFC1631) • VPN pass-through for PPTP/L2TP/IPSec tunneling • Natural NAT firewall • Advanced stateful packet inspection (SPI) firewall • Denial of service protection • User access control; deny certain PCs access to internet services
Management	• Easy-to-use web-based GUI for quick setup, configuration and management • Menu-driven interface/Command-line interface (CLI) for local console and Telnet access • Password protected management and access control list for administration • SNMP management with SNMPv1/SNMPv2c (RFC1157/1901/1905) agent and MIB II (RFC1213/1493) • Software upgrade via web-browser/TFTP server
Indications	• General: PWR • WAN: LNK, ACT • LAN: 1, 2, 3, 4 (ET10RS) LAN: Link, ACT (ET10R) • SHDSL: ALM
Power Input	DC 9V in
Power Consumption	< 9W
Dimensions	145 x 187 x 33mm (D x W x H)
Weight	580g
Temperature	0~50°C (Operating) ,-10~70°C (Storage)
Humidity	10~90% non-condensing
Certification	CE, FCC, RoHS
MTBF	57,000 hrs (25°C)

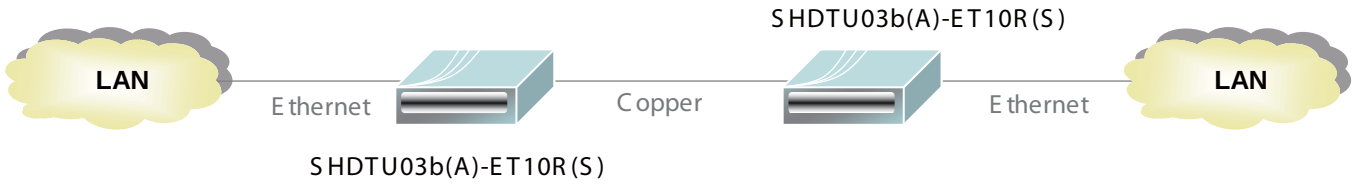

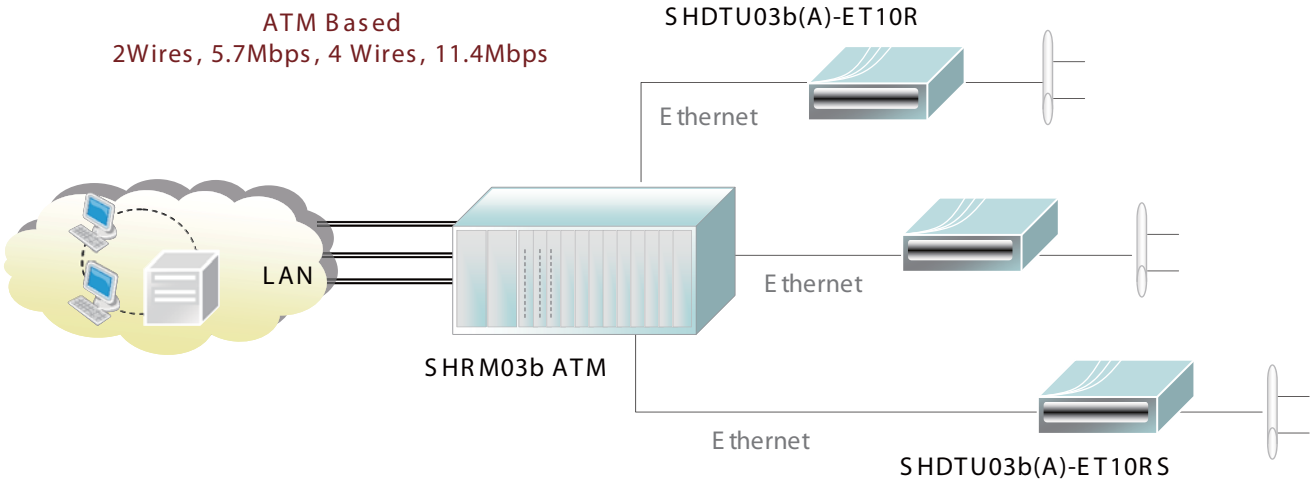

	SHDTU03b-ET10R	SHDTU03bF-ET10R	SHDTU03b-ET10RS	SHDTU03bF-ET10RS	SHDTU03bA-ET10RS	SHDTU03bAF-ET10RS
WAN	2-wire	2-wire	2-wire	2-wire	4-wire	4-wire
LAN	1	1	4	4	4	4
Auto-MDIX	Yes	Yes	Yes	Yes	Yes	Yes
Port-based VLAN	None	None	Yes	Yes	Yes	Yes
802.1q VLAN	1LAN / 1WAN	1LAN / 1WAN	4LAN / 8WAN	4LAN / 8WAN	4LAN / 8WAN	4LAN / 8WAN
IP precedence	No	Yes	No	Yes	No	Yes
Maximum data rate	5.7Mbps	5.7Mbps	5.7Mbps	5.7Mbps	11.4Mbps	11.4Mbps
Minimum data rate	192Kbps	192Kbps	192Kbps	192Kbps	384Kbps	384Kbps

Ordering Information

SHDTU03b(F)- □□□□□ Model type

ET10R : 1port
ET10RS: 4ports

Example: SHDTU03b-ET10R
SHDTU03bF-ET10R

SHDTU03bA(F)- □□□□□ Model type

ET10RS: 4ports

Example: SHDTU03bA-ET10RS
SHDTU03bAF-ET10RS

G.SHDSL.bis Router / NTU Performance

4 wires Rate(kbps)	2 wires Rate(kbps)	N	AWG#26 (0.4mm)	AWG#26 (0.4mm)	AWG#24 (0.5mm)	AWG#24 (0.5mm)	AWG#22 (0.9mm)	AWG#22 (0.9mm)
			kft	km	kft	km	kft	km
384	192	3	24	7.3	30	9.1	54	16.5
512	256	4	23	7	28.5	8.6	51.5	15.7
1024	512	8	19.5	5.9	24	7.3	43.5	13.3
1920	960	15	17	5.2	21	6.4	38	11.6
2176	1088	17	16.5	5	20.5	6.2	37	11.3
2560	1280	20	16	4.9	20	6.1	36	11
3584	1792	28	14	4.3	17.5	5.3	31.5	9.6
3840	1920	30	14	4.3	17.5	5.3	31.5	9.6
4352	2176	34	13.5	4.1	16.5	5	30	9.1
4608	2304	36	13	4	16	4.8	29	8.8
5120	2560	40	12.5	3.8	15.5	4.7	7 28.0	8.5
5632	2816	44	12.5	3.8	15.5	4.7	7 28.0	8.5
6400	3200	50	12	3.7	15	4.5	27	8.2
6912	3456	54	11	3.4	13.5	4.1	24.5	7.5
7424	3712	58	11	3.4	13.5	4.1	24.5	7.5
7680	3840	60	10.5	3.2	13	3.9	23.5	7.2
7936	3968	62	10.5	3.2	13	3.9	23.5	7.2
8448	4224	66	10	3	12.5	3.8	22.5	6.9
8960	4480	70	10	3	12.5	3.8	22.5	6.9
9472	4736	74	9.5	2.9	11.5	3.5	21	6.4
10240	5120	80	9.5	2.9	11.5	3.5	21	6.4
11136	5568	87	8.5	2.6	10.5	3.2	19	5.8
11392	5696	89	8.5	2.6	10.5	3.2	19	5.8

G.SHDSL.bis VPN Router

VPN10/20/40

The VPN10/20/40 G.SHDSL.bis VPN Router is a high performance 4 ports Security Gateway providing Internet access and LAN-to-LAN application over existing copper line for small/medium office. Complying with ITU-T G.991.2 (2004) standard, VPN10/20/40 make full use of the advanced G.SHDSL.bis technology to offer data transmission rates of up to 5.696Mbps in 2-wire mode , 11.392Mbps in 4-wire mode and 22.784Mbps in 8-wire mode.

The VPN10/20/40 VPN Router is integrated high-end Bridging/Routing capabilities with advanced functions of Multi-DMZ, Virtual Server mapping, and VPN pass-through. Because of rapid growth of network, virtual LAN has become one of the major new areas in internetworking industry. The VPN10/20/40 support port-based VLAN and IEEE 802.1q VLAN over ATM network.

With always on connection that DSL features, The VPN10/20/40 VPN routers provide advanced firewall with Stateful Packet Inspection (SPI) and DoS protection, serving as a powerful firewall to protect from outside intruders of secure connection. It also supports IP precedence to classify and prioritize types of IP traffic. In additional, its VPN feature supports data transmission over the Internet by data encryption/decryption between two sites. VPNs feature allows replacing a private leased line to minimize the expense among global inter-connection.

Features

- Easy configuration and management with password control for various application environments
- Efficient IP routing and transparent learning bridge to support Internet broadband services
- Virtual LANs (VLANs) offer significant benefit in terms of efficient use of bandwidth, flexibility, performance and security
- VPN for safeguarded connections
- Built-in advanced SPI firewall (Firewall Router)
- IP precedence to partition the traffic into multiple classes of service (Firewall Router)
- Four 10/100M Base-T Auto-sensing, Auto-negotiation and Auto-MDI/MDIX switching port for flexible local area network connectivity
- DMZ host/Multi-DMZ/Multi-NAT enables multiple workstations on the LAN to access the Internet for saving the cost of IP address
- Fully ATM protocol stack implementation over SHDSL.bis
- PPPoA and PPPoE support user authentication with PAP/CHAP/MS-CHAP
- SNMP management with SNMPv1/v2c/v3 agent and MIB II
- Getting enhancements and new features via Internet software upgrade

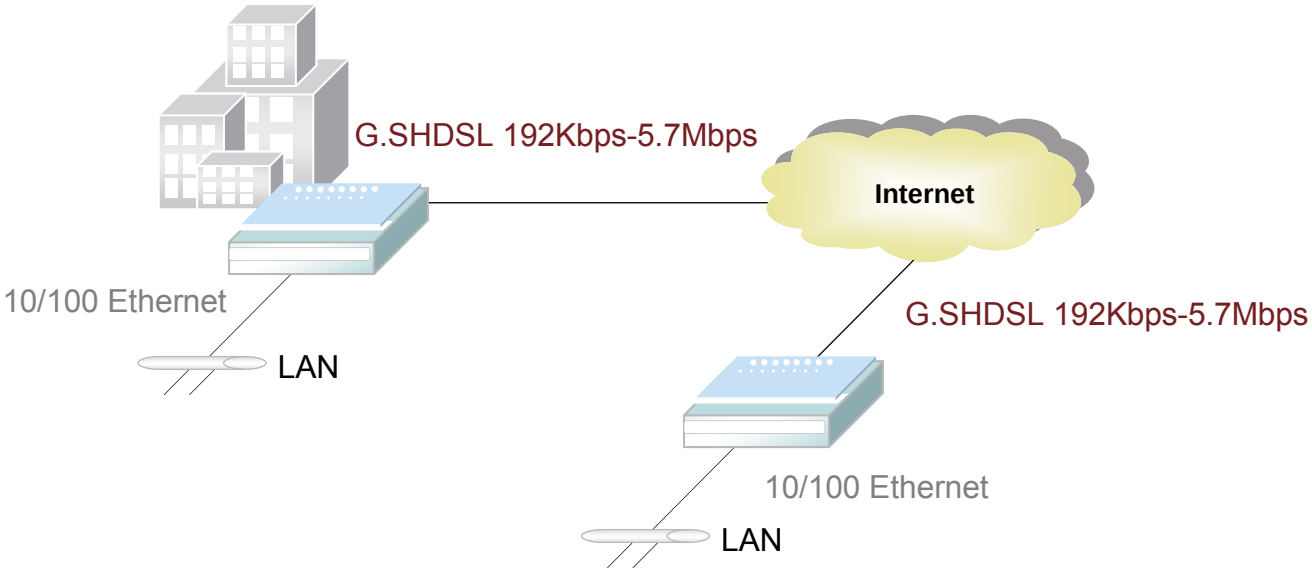

Hardware Interface	WAN Port • SHDSL.bis: ITU-T G.991.2 (2004) Annex A/B/F/G supported • Encoding scheme: TC-PAM 16/ TC-PAM 32 • Data Rate: N x 64kbps (N= 3 ~ 89, 89 as default) (For 6210) • Data Rate: N x 128kbps (N= 3 ~ 89, 89 as default)(For 6220) • Data Rate: N x 256kbps (N= 3 ~ 89, 89 as default) (For 6240) • Impedance: 135 ohms LAN Port: 4-Ports 10/100M Switch supports • Auto-negotiation for 10/100Base-TX and Half/Full Duplex • Auto-MDIX DMZ Port : 1- Port 10/100M Ethernet • Auto-negotiation for 10/100Base-TX and Half/Full Duplex • Auto-MDIX Serial Console Port: RJ45 connector Factory Default Reset : Push Button LED: Power (Green) WAN LINK/ACT(Green), one LED per pair LAN (Port 1~port 4) LINK/ACT (Green) ALARM (Red)
Bridging and VLAN	• IEEE 802.1D Transparent Learning Bridge • IEEE 802.1Q and Port Based VLAN • Q-in-Q Support on WAN Port • Spanning Tree Protocol (STP) • Up to 2K Mac Address
Routing	• Static routing and RIP v1/v2c(RFC 1058/2453) • NAT/PAT, Multi-NAT (RFC1631, 2993)) • NAT Application Level Gateways • Skype/MSN/Yahoo Messenger (RFC2933) • VoIP(SIP) pass through • VPN PPTP/L2TP pass through • Virtual Server
Network Protocol	• IPv4 (ARP/RARP, TCP/UDP,ICMP) • DHCP Client/Server, Relay • DNS Relay/Proxy, Dynamic DNS(DDNS) • IGMP v1/v2, IGMP Proxy, IGMP Snooping • SNTP and UPnP
ATM	• 8 PVC • OAM F4/F5 Loopback • AAL5 • VC Multiplexing and SNAP/LLC • Ethernet over ATM (RFC 2684/RFC1483) • PPP over ATM (RFC 2364) • Classic IP over ATM (RFC 1577) • QoS(UBR/CBR/VBR/VBR-RT)

PPP	• PPPoE • PAP/CHAP/MS-CHAP • Configurable timer to auto-reconnect, • Configurable Idle times for timeout
QoS	• 802.1P Tag • IPv4 TOS/DiffServ • Class-based Prioritization • Class-based Traffic Shaping • Up to 8 priority queues • IP Precedence Alternation
VPN	• IPSec (RFC2411) up to 4 channels • DES/3DES/AES • MD5/SHA-1 • IKE/Manual Key • ISAKMP (RFC 2407/2408/4306) • IKE v1 (RFC 2409/4109) • PSK • L2TP/PPTP
Firewall	• SPI (Stateful Packet Inspection) • Intrusion Detection/DoS (Denial of Service) • DMZ • Content Filtering • URL Blocking • Packet Filtering/Access Control List (ACL)
Management	• Web and Telnet via Management port • CLI via serial console • Support SSH (RFC4250/4251/4252/4253/4254/4255/4256) • SNMP v1/v2c/v3 (RFC 1157/1901//1905) • MIB II (RFC 1213/1493) • Syslog with Remote Logging support • Firmware Upgrade via TFTP • Configuration Data Import/Export • Multiple Levels of Administration Privilege
Physical / Electrical	• Dimensions: 18.7 x 3.3 x 14.5cm (WxHxD) • Power: 100~240VAC (via power adapter) • Power Consumption: 9 watts Max • Temperature: 0~45°C • Humidity: 0%~95%RH (non-condensing)

Ordering Information

VPN- □□□□□ Model type

10 : 2 Wires
20 : 4 Wires
40 : 8 Wires

Example: VPN-10

EFM LAN Extender

EFM-10/ 20/ 40

EFM-X0 is an Ethernet Network Extender designed to provide bonded high-speed Ethernet First Mile services over SHDSL on existing copper infrastructure. It is a bridge mode modem that delivers Ethernet services with symmetrical bandwidth at rates up to 22.8 Mbps (4 Pairs, Standard mode with TC-PAM 32) and 45.3 Mbps (4Pairs, Enhanced mode with TC-PAM 64). Implemented based on IEEE 802.3ah EFM standards for advanced performance and management features, EFM-X0 ensures high reliability, low expense and maximum throughput. The introduction of EFM copper bonding technology allows delivery of higher bandwidth to longer distances over multiple copper pairs, enabling a good alternative in place where fiber is not economical to deploy. This Ethernet-pure solution provides a seamless integration into today and tomorrows networks. EFM-X0 extends the reach of Ethernet services to the sites by using bonded copper pairs. Up to 4 pairs can be bonded together for aggregated bandwidth over 45Mbps (Enhanced mode with TC-PAM 64 line coding technology). Designed with standard-based EFM technology (2BASE-TL), deployment of Ethernet services with EFM-X0 is quick and simple on the existing copper plant. It operates mainly in Point-to-Point connection between remote office and enterprise headquarters, providing symmetrical high-speed connectivity that is ideal for large and small-to-medium enterprises to deliver business-class Ethernet service.

Features

- Extending Ethernet Services to sites with existing copper infrastructure
- Support TC-PAM 32 for 5.7 Mbps over single pair copper (Standard mode)
- Support industry-leading TC-PAM 64 for 11.3 Mbps over single pair copper(Enhance Mode Higher speed with shorter reach option)
- EFM Bonding (PAF, PME Aggregation Function) up to 4 pairs
- Flexible and Rapid Service Deployment
- Flexible configuration as CPE or CO
- Support EFM OAM complying IEEE 802.3ah
- Low Delay, Jitter and Packet Loss for delay sensitive applications
- Comprehensive and easy OAM & P functions in provisioning and management
- QoS feature for guaranteed Ethernet service
- Future-proof Ethernet traffic management and QoS features

Bandwidth Aggreation up to 22.8Mbps
Over 4 pair of Copper wires

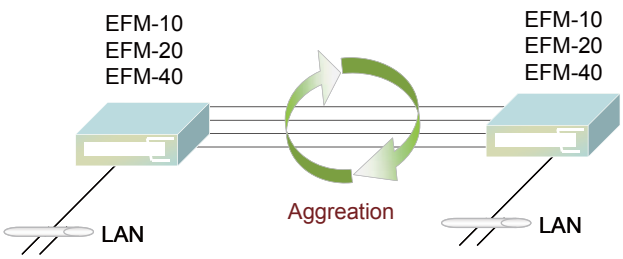

Network Interface	LAN	• 4 port switching hub • 10/100BASE-T auto-negotiation & sensing • Auto MDI/MDI-X
	WAN	• ITU-T G.991.2.(2004) • 2BASE-TL • EFM bonding (IEEE 802.3ah PAF) • Data Rate: N x128 Kbps(N=3~89) as 2 wire model N x256 Kbps(N=3~89) as 4 wire model N x512 Kbps(N=3~89) as 8 wire model • Support of Annex A , Annex B , Annex AF & Annex BG • Impedance: 135 ohms
LAN Protocols		• 802.1d Transparent Bridging • Up to 2K MAC Address learning bridge
Hardware Interface		• DSL : RJ-45 x 1 • LAN : RJ45 x 4 • MGMT: RJ45 x 1 • Console Port x 1 • Reset Button : Load Factory Default • DC Power Jack x 1
Indicator		• LAN : Link/Act, 10/100 per port • WAN: Link per loop • System: Power, Alarm, MGMT
Management Interface		• Easy to use web-based GUI for quick setup, configuration and management • Menu-driven interface/Command line interface (CLI) for local console and telnet access • Password protected management and access control list for administration • SNMP v1/v2 (RFC1157/1901/1905) agent and MIB II (RFC1213/1493) • EFM OAM (IEEE 802.3ah) • Software upgrade via web-browser / TFTP
VLAN Support		• IEEE 802.1q VLAN Tagging • Port Based VLAN • Up to 4K 802.1q VLAN • VLAN Stacking (Q-in-Q)
QoS Support		• Rate limiting by rule-based/port-based • Traffic classification based on port/802.1p/ DSCP • WRR (Weighted Round Robin) / SPQ (Strict Priority Queuing) scheduling algorithm
Environment		• Operating Temperature: 0°C ~ +50°C • Extended Operating Temperature: -20°C ~ +45°C • Storage Temperature: -40°C ~ +85°C • Relative Humidity: 98%, non-condensing
Regulatory		• ISO 9001 Quality Management • CE Approval
Physical / Electrical		• Dimension : 195 x 48 x 168mm (D x W x H) • AC Power Adapter (90~240VAC with 50~60Hz) • Weight: 5610E: 1300g, 5620E: 1320g , 5640E :1340g
Memory		• 2MB Flash Memory , 4MB SDRAM

Ordering Information

EFM-□□□□□ Model type

10 : 2 wires
20 : 4 wires
40 : 8 wires

Example: EFM-10

G.SHDSL.bis LAN Extender

SHDTU03b-ET100BS

The SHDTU03b-ET100BS is a low cost LAN extension solution using the latest G.991.2 (2004), G.SHDSL.bis technology and providing 192Kbps ~ 5.7Mbps throughput with only a single copper wire pair. A LAN extender is a device that forwards traffic between LANs transparently to higher network-layer protocols over distances that far exceed the distance limitations of standard Ethernet. A LAN is a high-speed data network (usually employing Ethernet technology) that connects computer workstations, printers, servers, and other devices. Designed specifically for LAN to LAN extension, this is a perfect solution to extend a LAN to an adjacent building, garage or any location outside of the 100 meter reach of Ethernet UTP.

WAN Interface	Line coding: 16 TC-PAM or 32 TC-PAM Line rate: 192Kbps ~ 5696Kbps Annex A, Annex B and Annex F selectable
LAN Interface	10/100Base-TX, RJ45 Data rate: 192Kbps ~ 5696Kbps Packet sizes: 1518/1522(default), 1536/1784 selectable MAC address filtering bridge up to 2K
Indications	LEDs (Power, LAN, Link/Act, Speed, Alarm)
Standard	ITU-T G.991.2 (2004), IEEE802.3, 802.3u, 802.1Q, 802.1D
Power Input	DC 5V via AC switching adapter
Power Consumption	3.5W
Dimensions	130 x 161 x 28.8 mm(D x W x H)
Weight	0.3kg
Temperature	0~50°C (Operating), -10~70°C (Storage)
Humidity	10~90% non-condensing
Certification	CE, FCC
MTBF	35,000 hrs (25°C)

Features

- Extends LAN connectivity using copper pair
- Symmetrical up / downstream data rates from 192Kbps ~ 5.696Mbps
- Adaptive or Fixed rate
- STU-C / STU-R mode selectable
  Supports 802.1Q port and tag based VLAN
- 4 port 10/100 Base-TX Ethernet with 64Kbps bandwidth control granularity
- Auto MDI / MDIX
- Auto-Negotiation
- Console port setting
- Status LEDs for simple monitoring

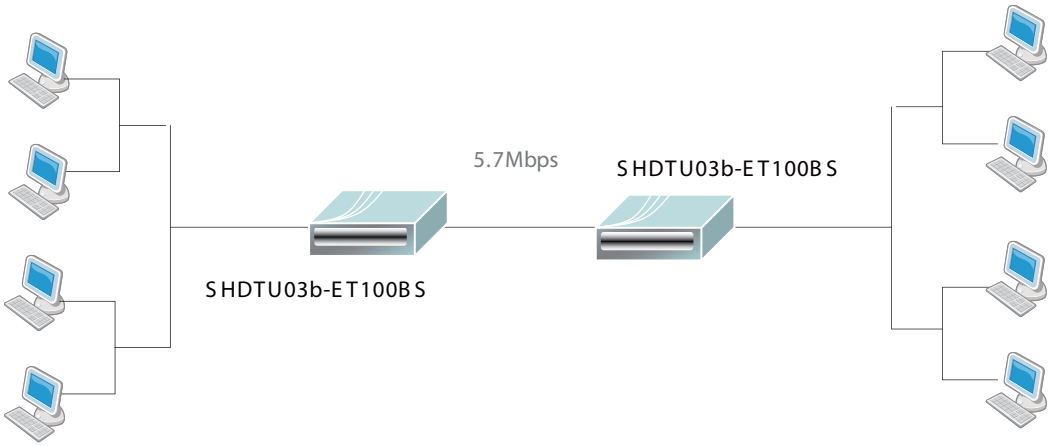

Ordering Information

SHDTU03b-□□□□□ Model type

ET100BS

Example: SHDTU03b-ET100BS

VDSL 2 Bridge with 1-port Ethernet

VDTU2A-301

The VDTU02A-301 is our lowest cost LAN extension solution using the G993.1/993.2 VDSL2 technology and providing up to 100Mbps throughput with only a single copper wire pair. A LAN extender is a device that forwards traffic between LANs transparently to higher network-layer protocols over distances that far exceed the distance limitations of standard Ethernet. A LAN is a high-speed data network (usually employing Ethernet technology) that connects computer workstations, printers, servers, and other devices. Designed specifically for LAN to LAN extension and supporting both symmetrical and asymmetrical transmission at up to 100/75Mbps within 300 meters or 10/10Mbps rate at 1000 meters, this is a perfect solution to extend a LAN to an adjacent building, garage or any location outside of the 100 meter reach of Ethernet UTP.

LAN Interface	Complies with IEEE 802.3 10Base-T and 802.3u 100Base-TX Connector: RJ45
VDSL2 Interface	Complies with ITU-T G993.1/993.2 Connector: RJ45 DMT encoding On-board surge protection
Indicator	LAN: Act/Link, 10/100Mbps, Half/Full duplex VDSL: CO/CPE, Idle/Trained/Link
Standard	ITU-T G.993.1, 993.2, IEEE802.3, 802.3u
Power	DC 12V via AC switching adapter
Power Consumption	4.2W
Dimensions	97 x 73 x 23mm (D x W x H)
Weight	80g
Temperature	0 ~ 50°C (Operating), -10 ~ 70°C (Storage)
Humidity	10~90% non-condensing
Certification	CE, FCC, RoHS
MTBF	50,000 hrs (25°C)

Features

- Cost effective bridge function to connect two Ethernet LAN
- 100/75Mbps @ 300m (980 Ft)
- 10/10Mbps @ 1km (3300 Ft)
- Support flow control via Pause frame or back pressure
- 802.1Q VLAN tag transparent
- Selectable CPE and CO mode via DIP switch
- Selectable fast and interleaved mode
- Selectable data rate
- Selectable target SNR margin 9dB or 6dB

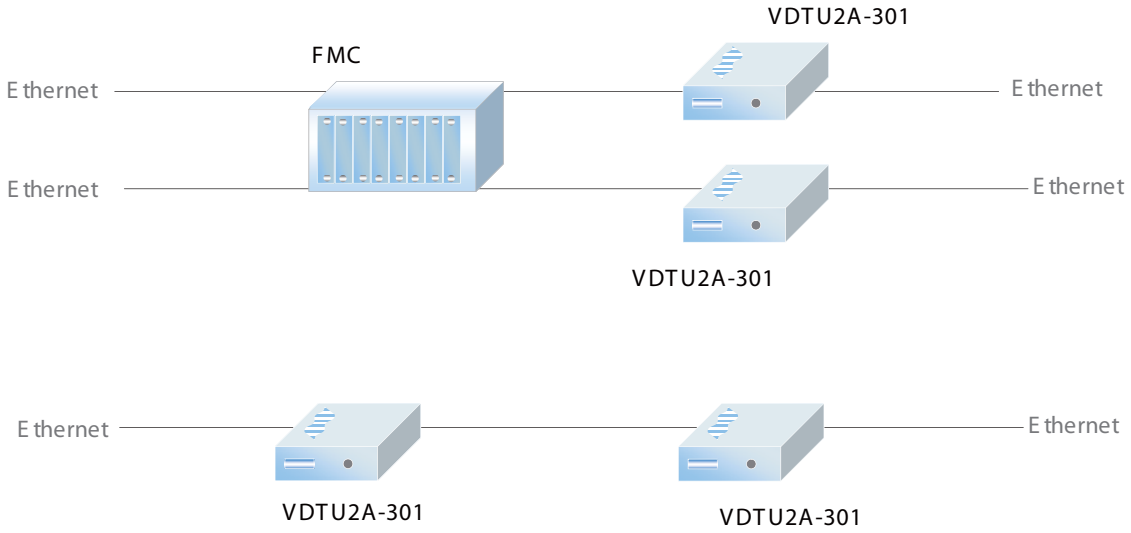

Ordering Information

VDTU2A- □□□□□ Model type

301

Example: VDTU2A-301

VDSL2 CO/ CPE modem

VDTU2-104, VDTU2-204

The VDTU2-104 / VDTU2-204 are VDSL2 (Very-High-Bit-Rate Digital Subscriber Line 2) ITU-T G.993.2 standard modems used as an access technology that exploits the existing infrastructure of copper wires that were originally deployed for POTS services. They can be deployed from central offices, from fiber-fed cabinets located near the customer premises or within buildings. ITU-T G.993.2 VDSL2 is the newest and most advanced standard of DSL broadband wire line communications. Designed to support the wide deployment of "triple play" services such as voice, video, data, high definition television (HDTV) and interactive gaming, VDSL2 enables operators and carriers to gradually, flexibly, and cost efficiently upgrade existing xDSL infrastructure. ITU-T G.993.2 (VDSL2) is an enhancement to G.993.1 VDSL that permits the transmission of asymmetric and symmetric (Full-Duplex) aggregate data rates up to 200 Mbit/s on twisted pairs using a bandwidth up to 30 MHz. VDSL2 deteriorates quickly from a theoretical maximum of 250 Mbit/s at 'source' to 100 Mbit/s at 500m and 50 Mbit/s at 1km. From 1km and beyond, VDSL2 degrades at a much lower rate, performing the same as ADSL2 but still outperforming standard VDSL. This means that VDSL2-based systems, unlike VDSL1 systems, are not limited to short loops or MTU/MDUs only, but can also be used for medium range applications

Features

- Very High-speed Digital Subscriber Line version 2 (VDSL2) modem
- 4 ports 10/100BaseTX LAN
- Supports Router with firewall or Bridge mode
- Bandwidth control
- POTS/ISDN splitter on board
- Auto speed on VDSL2 port
- Supported protocols: HTTP, TFTP, PPPoE, uPnP, NAT/DHCP/DMZ
- Supports loopback test
- Supports SNR indication
- Surge protection on DSL port

Standard	IEEE 802.3, IEEE802.3u, ETSI, ITU, ANSI VDSL2
Ports	VDSL2 Interface: Connector: RJ11 VDTU02-104 for Master modem VDTU02-204 for Slave modem POTS/ISDN Splitter port RJ11 Ethernet Interface: Connector: RJ45 4 port 10/100Base-TX Ethernet Bridge & Router
Performance	100Mbps / 300meter
Management	Console port:RS232 Support firmware upgradeable
Indications	Power, Ethernet Link/Act, DSL link
Power Input	12VDC
Power Consumption	< 5W
Dimensions	184 x 146 x 40mm (D x W x H)
Weight	650g
Temperature	0~50°C (Operating) ,-10~70°C (Storage)
Humidity	10~90% non-condensing
Certification	CE, FCC, RoHS
MTBF	35,000 hrs (25°C)

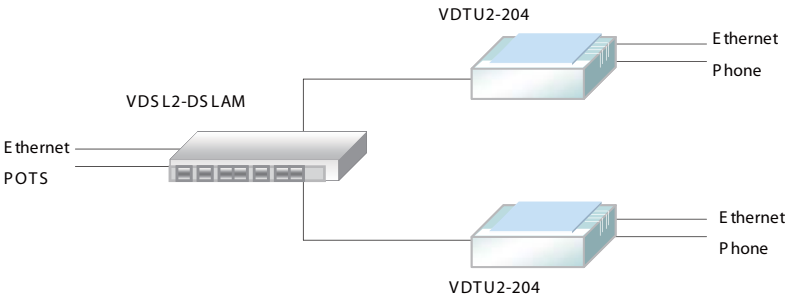

Ordering Information

VDTU2-□□□□□ Model type

104 : CO modem
204 : CPE modem

Example: VDTU2-104
VDTU2-204

1.5U 48 Port Managed IP DSLAM

MD15

The MD-15 is a 1.5U 19" rack mountable "pizza box" type ADSL2+ IP DSLAM with temperature hardening. The system provides 48 ADSL/2/2+ ports with built-in POTS splitters and is able to provide broadband data communication services and multimedia services on the same copper line. The unit is capable of delivering high speed data services, full-rate of ADSL2+ (up to 24mbps download) for 48 subscribers with 2 Gigabit uplinks or 10 Mbps per port for 96 subscribers in a two 48-port stacked boxes configuration. With advanced QoS features, the MD-15 is ideal for next generation broadband networks capable of delivering rich video content, DSL, POTS, and VoIP service over ADSL2+ link. The MD-15 provides two uplink ports with both electrical and optical (SFP) Gigabit Ethernet (GbE) interfaces for cascading, ring architecture or 802.3ad link aggregation. The MD-15 is suitable for small size applications or deployment in remote location such as business parks or street cabinets to extend the service reach distance from central office.

Features

- 48 ports ADSL2/2+ solution in 1.5U chassis
- 1+1 Gigabit Ethernet trunk with combo SFP and RJ45
- Multi-ADSL speed offerings supporting ADSL, ADSL2, ADSL2+ over POTS or ISDN
- Built-in POTS splitters
- Temperature monitor and system over temperature protection with trap alarm
- Backup firmware partition aids in upgrade failure recovery
- Configuration backup and restore via TFTP
- RS-232 serial CLI and separate LAN port for web based management
- NMS/EMS for Multiple nodes management based on SNMP (option)

Ports	Network Interface 2 x 10/100/1000 Based-Tx or 2 x SFP (IP) Line Interface ADSL2/2+/ POTS(G.992.1 .2 .3 .5)
Service characteristics	Ethernet: IEEE 802.1d Spanning Tree Protocol (STP) IEEE 802.3ad Link aggregation Password Security on console access OSI Layer 2 Functionality: MAC filtering and count limit Access control list (ACL) Multicasting support Port based and 802.1p/q Tag-based VLAN IGMP V1/V2 snooping and proxy SNMP V1/V2C
System Configuration	Multiple session Telnet, web based and SNMP Supports point to point VCC link Software remote upgrade
Alarm and Status Surveillance	Automatic alarm/LED indication for alarm and system status Four housekeeping inputs and one alarm contact closure output
Management	Provides all system OAM&P functionalities, software remote updates. RS-232 local console interface for basic provisioning plus out-band Ethernet interface for Telnet or Web
Indications	GbE 1/2 link, RST, ACO, ALM, SYS, DSL Status 1 ~48
Power Input	Dual A+B feeds, -42V ~ -56VDC AC: 100V ~ 240VAC
Power Consumption	130W
Dimensions	265 x 482 x 66mm (D x W x H)
Weight	3.5kg
Temperature	0~50°C (Operating), -10~70°C (Storage)
Humidity	10~90% non-condensing
Certification	CE, FCC, RoHS, ITU-T, ETSI
MTBF	25,000 hrs (25°C)

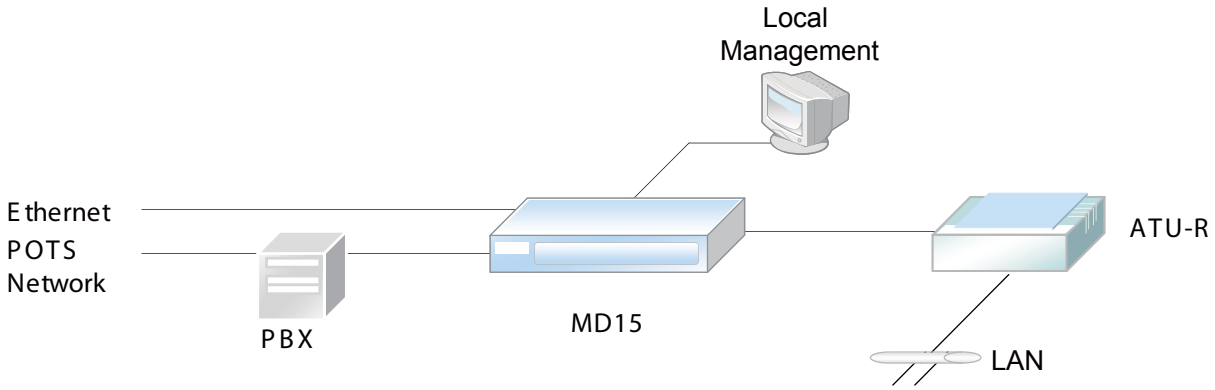

Ordering Information

Model type | Power type

MD15- □□□□□-□□

Model type	Power type	
48A6	AC	:48 port 600Ω Anx A
48AE	DC	:48 port 600Ω Anx A

Example: MD15-48A6-AC

1.5U 12/24 Port Managed IP DSLAM with Single Gigabit Ethernet Trunk

MD15A

The MD-15A is a 1.5U 19" rack mountable "pizza box" type ADSL2+ IP DSLAM with temperature hardening. The system provides 12/24 ADSL/2/2+ ports with built-in POTS splitters and is able to provide broadband data communication services and multimedia services on the same copper line. The unit is capable of delivering high speed data services, full-rate of ADSL2+ (up to 24mbps download) for 12/24 subscribers with one Gigabit copper uplinks. With advanced QoS features, the MD-15A is ideal for next generation broadband networks capable of delivering rich video content, DSL, POTS, and VoIP service over ADSL2+ link. The MD-15A is suitable for small size applications or deployment in remote location such as business parks or street cabinets to extend the service reach distance from central office.

Features

- 12/24 ports ADSL2/2+ solution in 1.5U chassis
- One copper Gigabit Ethernet uplink design
- Multi-ADSL speed offerings supporting ADSL, ADSL2, ADSL2+ over POTS or ISDN
- Built-in POTS splitters
- Monitors of line attenuation, noise margin, current rate, second performance data.
- Backup firmware partition aids in upgrade failure recovery
- Configuration backup and restore via TFTP
- RS-232 serial CLI and separate LAN port for web based
- management
- NMS/EMS for Multiple nodes management based on SNMP (option)

Network Interface	1 x 10/100/1000 Based-TX
Line Interface	ADSL2/2+/ POTS(G.992.1 .2 .3 .5)
Service Characteristics	Ethernet Password Security on console access OSI Layer 2 MAC filtering and count limit Functionality Access control list (ACL) Multicasting support Port based and 802.1p/q Tag-based VLAN IGMP V1/V2 snooping and proxy SNMP V1/V2C
System Configuration	Multiple session Telnet, web based and SNMP Supports point to point VCC link Software remote upgrade
Alarm and Status	Automatic alarm/LED indication for alarm and system status
Management	Maintenance signal for OAM functionalities. Software remote updates. RS-232 local console interface for basic provisioning plus out-band Ethernet interface for Telnet or Web
Indications	GbE link, RST, ACO, ALM, SYS, DSL Status
Power Input	-42V ~ -56VDC, 100V ~ 240VAC
Power Consumption	130W
Dimensions	265 x 482 x 66mm (D x W x H)
Weight	3.5kg
Temperature	-10~65°C (Operating), -10~70°C (Storage)
Humidity	5~95% non-condensing
Certification	CE, FCC, RoHS, ITU-T, ETSI
MTBF	25,000 hrs (25°C)

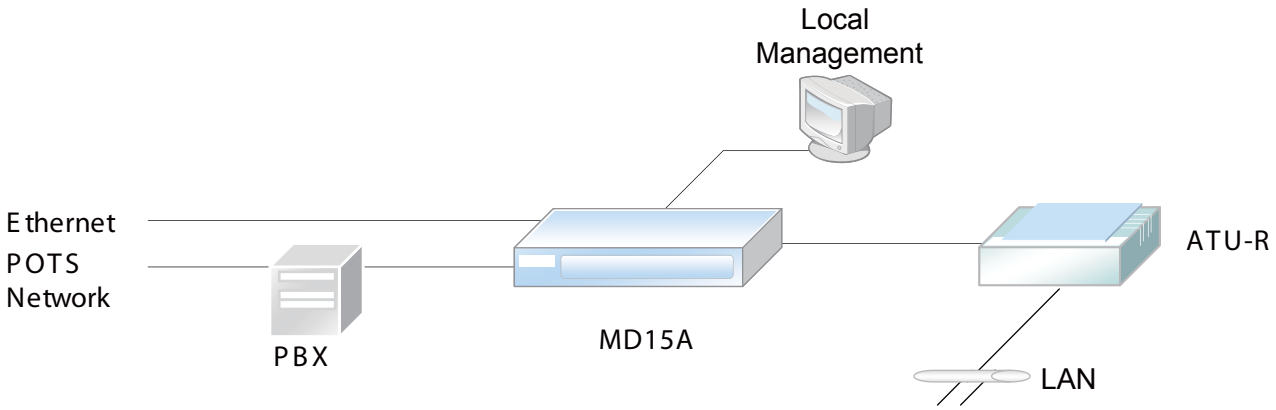

Ordering Information

Model type Power type

MD15A-□□□□□-□□

24A6	AC	:24 por 600Ω Anx A
12A6	DC	:12 port 600Ω Anx A

Example: MD15A-24A6-AC

2U 24/48/72 Port Managed IP DSLAM

MD20

The MD-20 is a 2U 19" rack mountable "pizza box" type ADSL2+ IP DSLAM with temperature hardening. The modular design allows hot swapping of major components such as uplink trunk card, 24 port tributary cards and cooling fan module. The system provides 24/48/72 ADSL/2/2+ ports with built-in POTS splitters and is able to provide broadband data communication services and multimedia services on the same copper line. The unit is capable of delivering high speed data services, full-rate of ADSL2+ (up to 24mbps download) for 72 subscribers with 2 Gigabit uplinks. With advanced QoS features, the MD-20 is ideal for next generation broadband networks capable of delivering rich video content, DSL, POTS, and VoIP service over ADSL2+ link. The MD-20 provides two uplink ports with both electrical and optical (SFP) Gigabit Ethernet (GbE) interfaces for cascading, ring architecture or 802.3ad link aggregation. The MD-20 is suitable for small size applications or deployment in remote location such as business parks or street cabinets to extend the service reach distance from central office.

Features

- 2U 19(23)" 3 slot ADSL2/2+ chassis
- Modular design with hot swappable field replaceable units
- 1+1 Gigabit Ethernet trunk with combo SFP and RJ45
- Temperature monitor and system over temperature protection with trap alarm
- Backup firmware partition aids in upgrade failure recovery
- Configuration backup and restore via TFTP
- RS-232 serial CLI and separate LAN port for web based management
- NMS/EMS for Multiple nodes management based on SNMP (option)

Network Interface	2 x 10/100/1000 Based-Tx or 2 x SFP (IP)
	Subscriber Interface
	ADSL2/2+/ POTS/ISDN(G.992.1 .2 .3 .5)
	or G.SHDSL
Line Interface : ADSL	24 ports per card
	Fast/Interleave latency modes for G.dmt
	Supports Interleave mode for G.Lite
	ADSL to ATM signal conversion
	Build-in POTS splitter circuit
	Power Consumption:25 W(max)
Line Interface : SHDSL	24 ports per card
	Signal modulation and demodulation
	G.SHDSL to ATM signal conversion
	Power Consumption:21 W(max)
Management Interface	Physical Layer: IEEE 802.3 (10Mbps)
	Upper Layer: Ethernet, IP, SNMP,TL1
Service characteristics	ATM QoS(UBR, rt-VBR, nrt-VBR, CBR)
	PVC default priority and PVC-to VLAN maping
	Traffic scheduling/shaping/policing
	Ethernet IEEE 802.1d Spanning Tree Protocol (STP)
	IEEE 802.3ad Link aggregation
	Password Security on console access
Management	OSI Layer 2 Functionality
	MAC filtering and count limit
	Access control list (ACL)
	Multicasting support
	Port based and 802.1p/q Tag-based VLAN
	IGMP V1/V2 snooping and proxy
	SNMP V1/V2C
System Configuration	Multiple session Telnet, Web based and SNMP
	Supports point to point VCC link
	Software remote upgrade
Alarm and Status Surveillance Management	Automatic alarm/LED indication for alarm and system status
	Four housekeeping inputs and one alarm contact closure output Provides all system OAM&P functionalities, software remote updates.RS-232 local console interface for basic provisioning plus out-band Ethernet interface for Telnet or Web
Indications	GbE 1/2 link, RST, ACO, ALM, SYS, DSL Status 1 ~48
Power Input	Input: -48 V DC (-42 V to -56 V)
	Dual A+B -48 V DC power input terminal
Power Consumption	130W
Dimensions	304 x 482 x 88mm (D x W x H)
Weight	4.5kg
Temperature	0~50°C (Operating), -10~70°C (Storage)
Humidity	10~90% non-condensing
Certification	CE, FCC, RoHS, ITU-T, ETSI
MTBF	25,000 hrs (25°C)

Ordering Information

MD20- □□□□□ Chassis type

MA1A : 2U DC power Rack

Example: MD20-MA1A

MD20- □□□□□ Opitonal card

GE1A: Gigabit Trunk Card
IM8A : 8E1 1MA Unit
AL5A : 24 port ANSI 600Ω Anx A
AL5B : 24 port ISDN Anx B
AL5E : 24 port ETSI 270Ω Anx A
SL6A : ATM SHDSL Anx A/B

Example: MD20-GE1A
MD20-IM8A

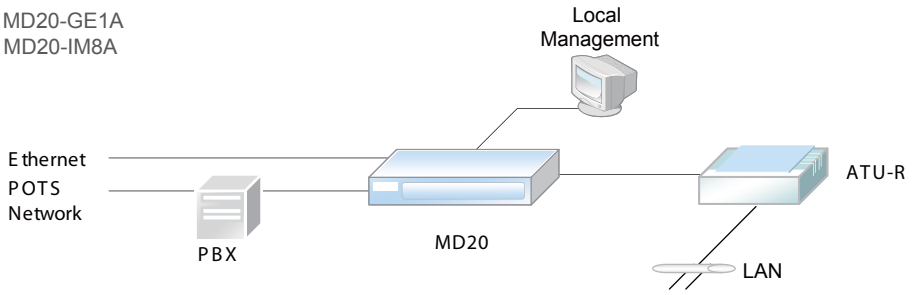

4 port ADSL2+ Modem

ATU-R160

The ATU-R160 ADSL2+ router is a full-featured ADSL router that provides high-speed Internet access and Ethernet direct connections to individual PCs or local area network with 10/100 Base-T Ethernet. The ATU-R160 uses an advanced ADSL chipset solution with a complete set of industry standard features that provide high-speed ADSL, ADSL2 and ADSL2+ Internet access for SOHO and residential users. The modem is available in two models, one with integral 4 port Ethernet switch and the other with single Ethernet port plus one USB port.

Features

- Full rate operation with up to 24Mbps downstream data rate and up to 1Mbps upstream data rate enables high-speed Internet access
- Web GUI configuration and management
- Supports TFTP upgrade
- Provides ALGs to support most major applications, such as MSN Messenger, CUSeeMe, ICQ, IRC, LDAP, PPTP, FTP, Quake, SIP, H.323, NetBios Over TCP/IP
- Enables end-to-end ATM support, which allows traffic management and QoS
- Built-in DHCP server automatically assigns IP addresses to all workstations on your LAN
- All management and monitoring can be done through Telnet session
- UPnP support

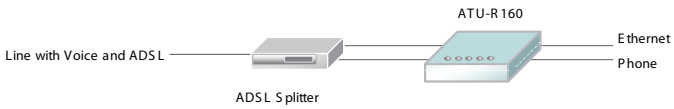

Ordering Information

ATU- □□□□□ Model type

R160-1A : 1port Anx A
R160-1B : 1port Anx B
R160-4A : 4port Anx A
R160-4B : 4port Anx B

Example: ATU-R160-1A
ATU-R160-1B

Ports	1 port USB port with USB V1.1 (12Mbps)
Interface	1/4 ports RJ45 Ethernet 1 port RJ11 port for ADSL one reset button for factory default setting
Standard	IEEE802.3 10Base-T802,3u, 100Base-TX, RFC2516 (PPPoE), ANSI T1.413 issue 2 ITU-T G.992.1 (G.dmt) ITU-T G.992.2 (G.lite) G.994.1 (G.hs, Multimode) ITU-T G.992.3 (ADSL2 G.dmt.bis) ITU-T G.992.4 (ADSL2 G.lite.bis) ITU-T G.992.5 (ADSL2+, Annex A, B, L, M) Reach Extended ADSL (RE ADSL)
Data Rates	WAN to LAN up to 90Mbps, LAN to LAN up to 100Mbps
ATM and PPP Protocols	Support up to 8PVCs ATM Forum UNI 3.1/4.0 PVC Multi Protocol over AAL5 (RFC1483 / 2684) VC and LLC Multiplexing PPP over Ethernet (RFC 2516) PPP over ATM (RFC 2364) Traffic Shaping (ATM QoS) UBR, CBR, VBR, VBR-rt, VBR-nrt OAM F4 and F5 segment end-to-end loop-back, AIS, and RDI OAM cells VPI is 0-255 and VCI is 32-65535
Bridging / Routing	Ethernet to ADSL self-learning Transparent Bridging (IEEE 802.1d) IP routing-RIPv2 (backward compatible with RIPv1) Static IP routing Routing (TCP/IP/UDP/ARP/ICMP) IP Multicast IGMP v1/v2
IP Management	NAT (Network Address Translation) NAPT (Network Address and Port Translation) DHCP Server / Relay / Client (WAN Port) VPN (IPSec, PPTP, L2TP) Pass-Through DNS Proxy Dynamic DNS UPnP support Virtual Server (Port forwarding) and DMZ host
Security	PPP over PAP PPP over CHAP, DoS protection Stateful packet inspection Built-in NAT Firewall IP-based Packet filtering Password Protected System management
Web Management	Web-based GUI Configuration / Management CLI (Command Line Interface) via serial interface or Telnet over Ethernet Telnet Remote Management Firmware upgrade via FTP / TFTP SNMP Support Built-in Diagnostic tool TR-069, CPE WAN Management Protocol
Indications	LEDs (ADSL, DATA, LAN, USB, PWR)
Power Input	12VDC
Power Consumption	130W
Dimensions	125 x 88 x 27mm (D x W x H)
Weight	3.5kg
Temperature	0~50°C (Operating) ,-10~70°C (Storage)
Humidity	10~90% non-condensing
Certification	CE, FCC, RoHS
MTBF	25,000 hrs (25°C)

6U 16-Slot ADSL Splitter Rack

ALS-R50

The ALS-R50 is a 6U, 16 slot, 19(23)" rack mountable chassis for concentrated central office POTS splitters used in conjunction with ADSL DSLAMs. The chassis motherboard is available in 4 different configurations, one with wire-wrap POTS, one with wire-wrap POTS plus DC blocking, one with IDC connector POTS and one with IDC connector POTS with DC blocking. Each physical card provides 24 loops. In the wire-wrap POTS configuration, the 24 loops of each card go directly to one group of connectors (POTS / Line / DSLAM). In the IDC connector based configuration, the 24 loop cards are grouped into sets of 4 cards or 96 loops. Therefore, IDC based configuration must be populated with 4,8,12 or 16 card sets. Each card set provides high density connections to the central office DSLAM using 2-50 pin (2.54mm pitch) locking header IDC connectors and cables. Each connector supports 24 loops. In the wire-wrap configuration, DSLAM connections are provided by 2-50 pin locking header IDC connectors while POTS and line connections are provided via two sets each of 12x4 wire wrap terminals.

Features

- 6U 19(23)" rack
- Consists exclusively of all passive elements
- Designed for implementation of ADSL CO application
- Handles all POTS loop current from 0 ~ 100mA
- If the power on ATU-C/ATU-R fails, telephone service on the ADSL line will operate normally
- Provides excellent isolation between DSL and POTS
- Up to 16 cards (384 loops Max)

Impedance	300 ~ 3.4KHz (900 ohms)
Insertion Loss	1004Hz short loop: 1dB
	1004Hz long loop: 0.75dB
Attenuation	200 ~ 3.4KHz short loop: -1.5 ~ 1.5dB
Distortion	3.4K ~ 4.0KHz short loop: -2 ~ 2dB
	200 ~ 3.4KHz long loop: -1.5 ~ 0.5dB
	3.4K ~ 4.0KHz long loop: -1.5 ~ 1dB
Cut off Frequency	-3dB (8KHz)
ADSL Band	30K ~ 300KHz: -65dB
Attenuation	300kk ~ 1104Hz: -55dB
Delay Distortion	600 ~ 3.2KHz: 200us
	200 ~ 4.0KHz: 250us
Return Loss	ERL: 8dB
	SRL-L: 5dB
	SRL-H: 5dB
Common Mode Rejection Ration	600 ~ 3.2KHz: -100dBb
Longitudinal Balance	200 ~ 1.0KHz : -60dB
	1 ~ 3KHz : -60dB
DC Resistance	20 ohms
Isolation resistance to Earth	5.0M ohms
DC current carrying capacity	100mA
ESD discharge limits	15k VDC
Dimensions	285 x 434 x 266mm (D x W x H)
Weight	18kg
Temperature	-10~70°C (Operating) ,-15~80°C (Storage)
MTBF	10~90% non-condensing

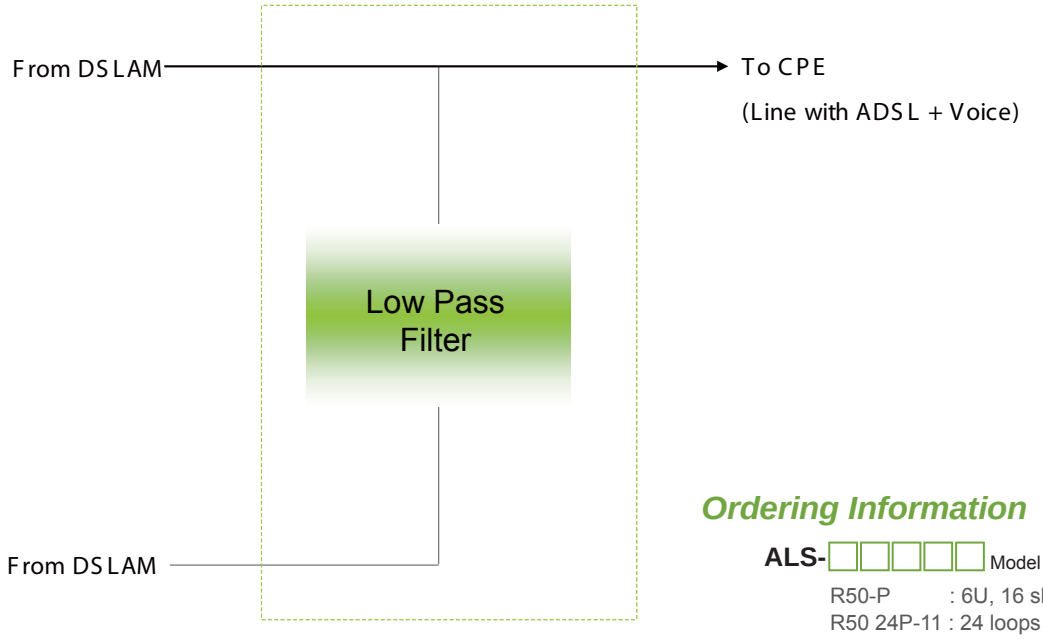

Ordering Information

ALS-□□□□□ Model type

R50-P : 6U, 16 slot rack
R50 24P-11 : 24 loops per card

Example: ALS-R50P
ALS-R50-24P-11

8U 20-Slot ADSL Splitter Rack

ALS-R60

The ALS-R60 is a 8U, 20 slot, 19(23)" rack mountable chassis for concentrated central office POTS splitters used in conjunction with ADSL DSLAMs. The chassis motherboard is available only with wire-wrap POTS and Line connections and HDB78 pin connectors for 32 loop per card DSLAMs. Each physical card provides 32 loops each of ADSL line splitters which provide low-pass filters designed to provide POTS (Plain Old Telephone System) service to a line that is utilizing ADSL technology. This device is designed to eliminate interference to POTS equipment by blocking the high frequency ADSL signal (20 KHz~12 MHz).

Features

- 8U 19(23)" rack
- Consists exclusively of all passive elements
- Designed for implementation of ADSL CO application
- Handles all POTS loop current from 0 ~ 100mA
- If the power on ATU-C / ATU-R fails, telephone service on the ADSL line will operate normally
- Provides excellent isolation between DSL and POTS
- Up to 20 cards (640 loops Max)

Impedance	0.3 ~ 3.4KHz (900 ohms)
Insertion Loss	1004Hz short loop: 1dB
	1004Hz long loop: 0.75dB
Attenuation Distortion	200 ~ 3.4KHz short loop: -1.5 ~ 1.5dB
	3.4K ~ 4.0KHz short loop: -2 ~ 2dB
	200 ~ 3.4KHz long loop: -1.5 ~ 0.5dB
	3.4K ~ 4.0KHz long loop: -1.5 ~ 1dB
Cut off Frequency	-3dB (8KHz)
Insertion Loss in ADSL Band	32 ~ 300KHz: -65dB
Delay Distortion	600 ~ 3.2KHz: 200us
	200 ~ 4.0KHz: 250us
Return Loss	ERL: 8dB
	SRL-L: 5dB
	SRL-H: 5dB
Common Mode Rejection Ration	600 ~ 3.2KHz: -100dBb
Longitudinal Balance	200 ~ 1.0KHz : -60dB
	1 ~ 3KHz : -60dB
DC Resistance	20 ohms
Isolation resistance to Earth	5.0M ohms
DC current carrying capacity	100mA
ESD discharge limits	15k VDC
Tip to Ring Capacitance (without modem connected)	20 ~ 115 nF
Dimensions (D x W x H)mm	300 x 434 x 320mm
Weight	18kg
Temperature	-10~70°C (Operating) ,-15~80°C (Storage)
MTBF	10~90% non-condensing

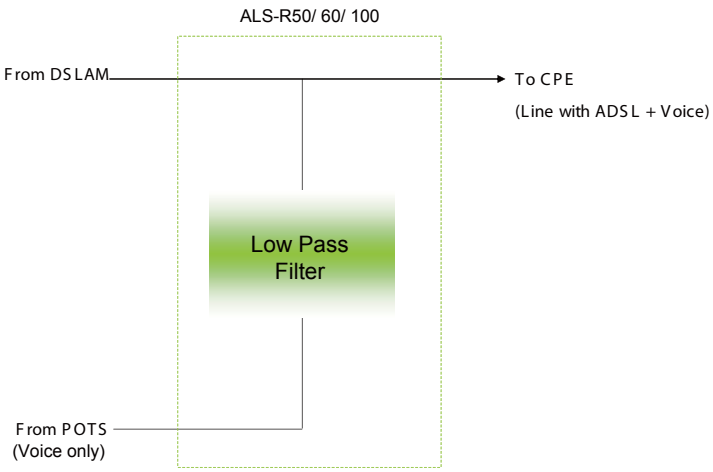

Ordering Information

ALS-□□□□□ Model type

R60-8 : 8U, 16 slot rack
R60-32P : 32 loops per card

Example: ALS-R60-8
ALS-R60-32P

CPE ADSL Splitter / Micro-Filter

ALS-12 / ALS-M12

The ALS-12 / ALS-M12 are low-cost, compact, passive low-pass filters designed to provide POTS (Plain Old Telephone System) service to a line that is utilizing ADSL/VDSL technology. This device is designed to eliminate interference to POTS equipment by blocking high frequency energy (20 KHz~12MHz). The ALS-12 provides point of entry filter to split the incoming line to the ADSL/VDSL modem and the POTS telephone. The ALS-M12 is a micro-filter designed to simply drop a POTS telephone off a line carrying ADSL/VDSL signal.

Standard	Annex E.2 of ITU-T G.992.3
Impedance	600 ohms
Insertion Loss	1004Hz short loop: 1dB
	1004Hz long loop: 0.75dB
Attenuation Distortion	200 ~ 3.4KHz short loop: -1.5 ~ 1.5dB
	3.4K ~ 300KHz short loop: -2 ~ 2dB
	200 ~ 3.4KHz long loop: -1.5 ~ 0.5dB
	3.4K ~ 300KHz long loop: -1.5 ~ 1dB
Cut off Frequency	-3dB (10KHz)
ADSL Band Attenuation	30 ~ 300KHz: 65dB
	300 ~ 1104KHz: 55dB
Delay Distortion	600 ~ 3.2KHz: 200us
	200 ~ 4.0KHz: 250us
Return Loss	ERL: 6dB
	SRL-L: 5dB
	SRL-H: 3dB
Common Mode Rejection Ration	600 ~ 3.2KHz: -100dBb
Longitudinal Balance	200 ~ 1.0KHz : 58dB
	1 ~ 3KHz : 53dB
DC Resistance	20 ohms
Isolation resistance to Earth	5.0M ohms
DC current carrying capacity	100mA
ESD discharge limits	15k VDC
Tip to Ring Capacitance	20nf
Dimensions	34 x 45 x 24mm (D x W x H)
Weight	70g
Temperature	-10~70°C (Operating) ,-15~80°C (Storage)
MTBF	10~90% non-condensing

Features

- Compact size
- Consists exclusively of all passive elements
- Designed for implementation of ADSL/VDSL CPE application
- Handles all POTS loop current from 0 ~ 100mA
- If the power of ATU-R fails, telephone service on the ADSL line will operate normally
- Provides excellent isolation between DSL and POTS
- The POTS splitter and Low-pass filter provides RJ-11 connectors for ATU-R/VTU-R and POTS interfaces
- The POTS Low-pass micro filter provides RJ-11 connectors for ATU-R/VTU-R and Phone

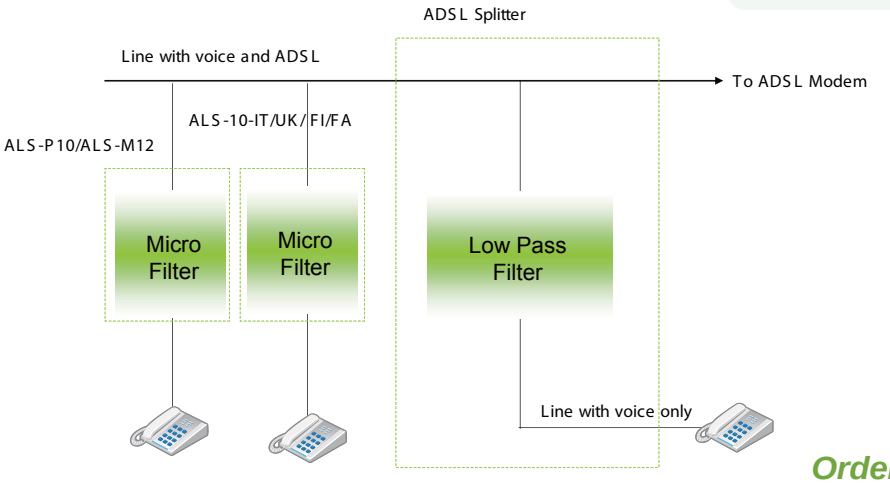

Ordering Information

ALS- □□□□□ Model type

12 : ADSL/VDSL Line Splitter
12C : ADSL/VDSL Line Splitter, with capacitor built-in RJ-11
M12 : ADSL/VDSL Micro Splitter

Example: ALS-12


ALS-M10-IT (ITALY)


ALS-M10-UK (UK)


ALS-M10-FI (Finland)


ALS-M10-FA (FRANCE)

CPE ADSL Splitter, Field for ITA, UK, FI, FR

ALS-10-IT

The ALS-10 regional ADSL splitters are low-cost, compact, passive low-pass filters designed to provide POTS (Plain Old Telephone System) service to a line that is utilizing ADSL/VDSL technology and customized with regional country telephone plugs. This device is designed to eliminate interference to POTS equipment by blocking high frequency energy (20 KHz~12MHz). The ALS-10 provides point of entry filter to split the incoming line to the ADSL/VDSL modem and the POTS telephone.

Features

- Compact size
- Consists exclusively of all passive elements
- Designed for implementation of ADSL/VDSL CPE application
- Handles all POTS loop current from 0 ~ 100mA
- If the power of ATU-R fails, telephone service on the ADSL line will operate normally
- Provides excellent isolation between DSL and POTS
- The POTS splitter and Low-pass filter provide RJ-11 connectors for
- ATU-R/VTU-R and POTS interfaces

Low pass filter order	3 Pole
Impedance	60300 ~ 3.4KHz: 600 ohms
Insertion Loss	1004Hz short loop: 1dB
	1004Hz long loop: 0.75dB
Attenuation Distortion	200 ~ 3.4KHz short loop: -1.5 ~ 1.5dB
	3.4K ~ 4.0KHz short loop: -2 ~ 2dB
	200 ~ 3.4KHz long loop: -1.5 ~ 0.5dB
	3.4K ~ 4.0KHz long loop: -1.5 ~ 1dB
Cut off Frequency	-3dB (12KHz)
ADSL Band Attenuation	30KHz: -25dB
	50KHz: -40dB
Delay Distortion	600 ~ 3.2KHz: 200us
	200 ~ 4.0KHz: 250us
Return Loss	ERL: 6dB
	SRL-L: 5dB
	SRL-H: 3dB
Longitudinal Balance	200 ~ 1.0KHz : 58dB
	1 ~ 3KHz : 53dB
DC Resistance	20 ohms
Isolation resistance to Earth	5.0M ohms
DC current carrying capacity	100mA
ESD discharge limits	15k VDC
Tip to Ring Capacitance	20nf
Dimensions	81 x 31 x 28mm (D x W x H)
Weight	45g
Temperature	-10~70°C (Operating) ,-15~80°C (Storage)
MTBF	10~90% non-condensing

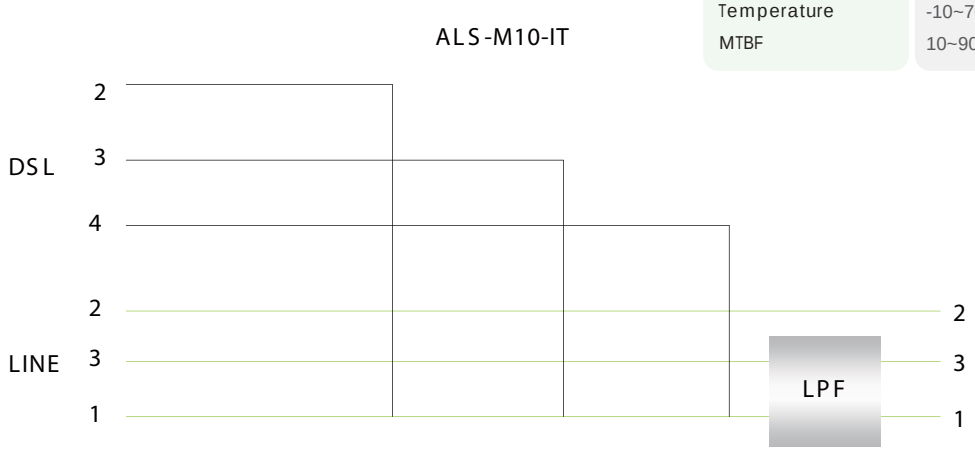

Ordering Information

Model type

ALS- □□□□□

IT	: field for Italy
UK	: field for United Kingdom
FI	: field for Finland
FA	: field for France

Example: ALS-10-IT

CPE ADSL Splitter for ADSL over ISDN

ALS-10-EU/ISDN

The ALS-10-EU/I is a low-cost, compact, low pass filter designed for ISDN-BA with 2B1Q or 4B3T baseband line codes coinciding with ADSL signals. It integrates a low pass filters that block the high frequency energy from reaching the ISDN-BA device and provides isolation from impedance effects of the ISDN-BA device on the ADSL modem. Because the ISDN splitter connects directly to the subscriber loop media, it must also provide some protection for externally induced line hits or faults which could damage to any attached equipment or endanger humans interacting with the installed equipment. The circuit protection will be provided mostly by standard central office line protection means and additional protection measures built into splitter to protect against line overstress which could damage the splitter itself. The electrical and transmission specifications are based on ETSI TS 101 952-1-3 V1.1.1 for ISDN-BA requirements.

Standard	ETSI TS 101-952-1-3 V.1.1.1
	Annex E.2 of ITU-T G.992.1
Impedance	135 / 150 ohms
Isolation	Wire A to B: 5.0M ohms
Insertion Loss	1 ~ 40KHz : 0.8dB
	40 ~ 80KHz : 2dB
	1 ~ 60KHz: 1.2dB
	60 ~ 80KHz: 2dB
Insertion loss in ADSL band	150 ~ 1104KHz: 65dB
Insertion loss between ADSL port to line port	120 ~ 170KHz : 2dB
	170 ~ 1104KHz: 1dB
Return loss at ISDN	1 ~ 40KHz : 16dB
	40 ~ 80KHz: 14dB
	1 ~ 60KHz : 16dB
	60 ~ 80KHz: 14dB
Unbalance to earth	300 ~ 30KHz: 40dB
	30 ~ 1104KHz: 46dB
	1104KHz ~ 3MHz:40dB
Delay Distortion	300 ~ 80KHz: 20us
DC Resistance	12.5 ohms
Dimensions	86 x 56 x 26mm (D x W x H)
Weight	70g
Temperature	-10~70°C (Operating) ,-15~80°C (Storage)
Humidity	10~90% non-condensing

Features

- Compact size
- Consists exclusively of all passive elements
- Designed for implementation of ADSL/VDSL CPE application
- Handles all ISDN loop current from 0 ~ 60mA
- If the power of ATU-R fails, telephone service on the ADSL line will operate normally
- Provides excellent isolation between DSL and ISDN
- The ISDN splitter and Low-pass filter provide RJ-11 connectors for
- ATU-R/VTU-R and ISDN interfaces

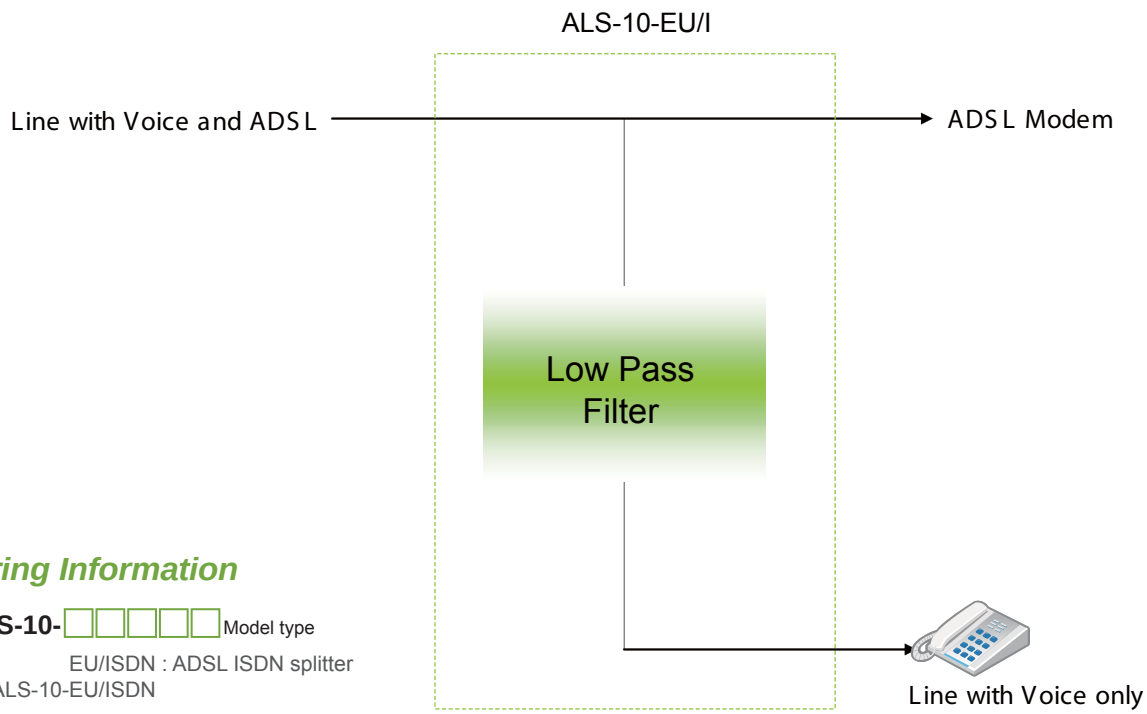

Ordering Information

ALS-10-□□□□□ Model type

EU/ISDN : ADSL ISDN splitter

Example: ALS-10-EU/ISDN

CPE ADSL Splitter, MDF Low Pass Type

ALS-P10

The ALS-P10 filters with Siemens / Krone type terminals, can be directly plugged into the existing terminals at central office one by one, as needed, thus eliminating need for extra terminal blocks and cabling. This leads to lower costs compared with ordinary splitters deployment, which requires operators to install large splitter racks and equipment awaiting presumable future use. With the ALD-P10, no extra cabling or terminal blocks are needed and with Krone LSA Plus terminals, only minor new cabling is needed. The plug type filters are easy to install onto the terminal blocks with no extra tools required. Filters act like disconnection plugs in that the contacts inside the terminal are disconnected and the filter connects in series to the loop pair. The plug type splitter requires the space of two pairs of LSA Plus terminal block. Individual filters can be plugged adjacent to each other and will not block neighboring pairs from insertion of new wires. Thus ADSL can be connected to subscribers independently.

Filter Type	Low Pass: Corner Frequency 7kHz (±1kHz). Optimal matching 600ohms DC path Max. 100mA High Pass Corner Frequency 22kHz (±2kHz). Optimal matching 135ohms no DC path
Over Voltage	Filter Adapted to POTS voltages (Max. ±200V)
Dimensions	104 x 18 x 20mm (D x W x H)
Weight	45g

Features

- Individual splitter
- Integrates directly in MDF (Main Distribution Frame)
- POTS service available when splitter inserted or removed (make before break)
- Various splitter designs available (POTS or ISDN)
- Includes a “Krone LSA-Plus” test plug connector

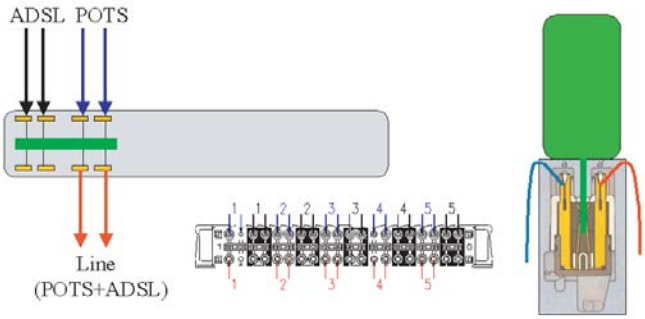

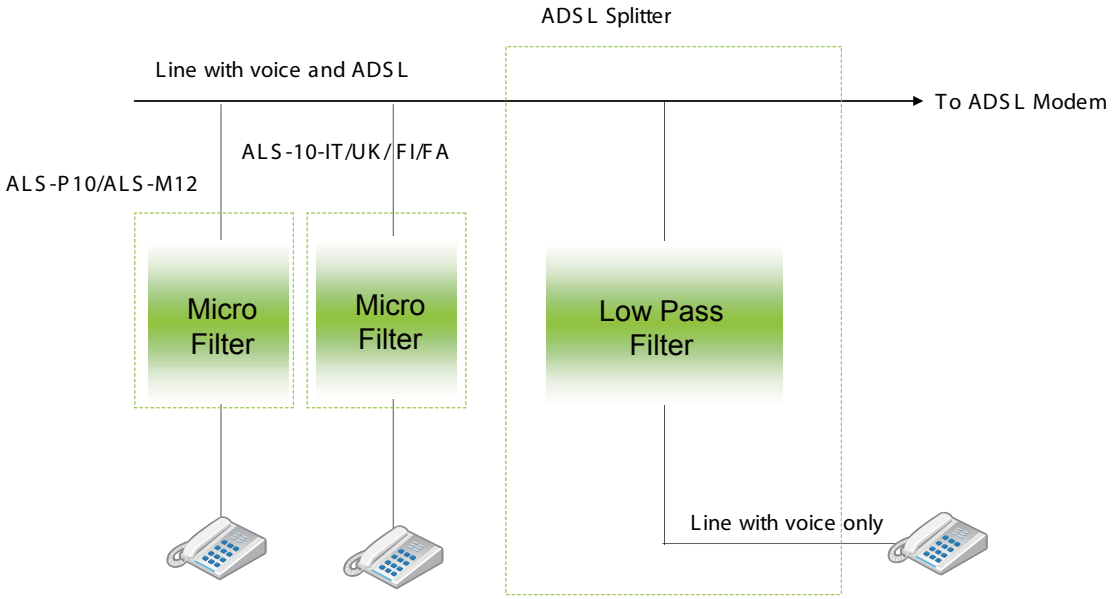

Ordering Information

ALS-P10- □□□□□ Model type

LP : Low Pass MDF ADSL splitter
HP : High Pass MDF ADSL splitter

Example: ALS-P10-LP

Connection / Disconnection Module

MDF-LP-10C, MDF-HP-10C

10 pair Terminal Blocks offer numerous options for station and high pair count cabling and feature built in wire guides and jumper rings.

Features

- Custom configured to meet your application
- Unique center port design allows for patching or testing without removing the cross-connect wires or disrupting the circuit
- Mounting hardware versatility provides for mounting virtually anywhere – walls, racks etc
- It protects your cable wiring from accidental access during jumper work

Module	MDF-LP-10C: 10 pair disconnection MDF-HP-10C: 10 pair connection
Nominal working voltage	50V DC (+5/-0) or 70V (+5/-0)
Insulation Resistance	> 1000M ohms (500V DC ± 50V DC)
Dielectric Strength	
Contact Resistance	> 10m ohms
Dimensions	124 x 20.7 x 39.3mm (W x D x H)

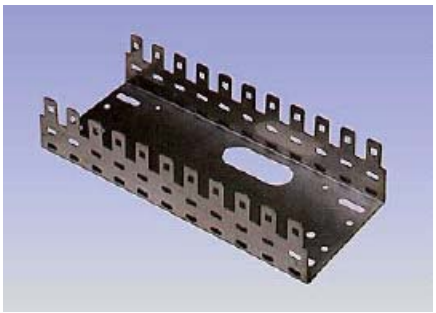

MDF-SEAT-11 : 11-module mounting pack

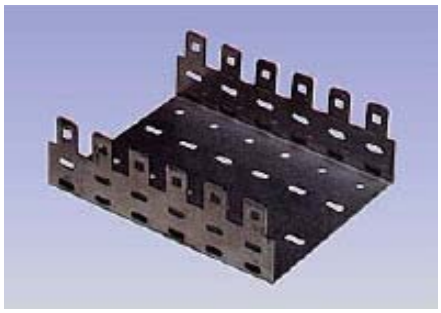

MDF-SEAT-06 : 6-module mounting pack

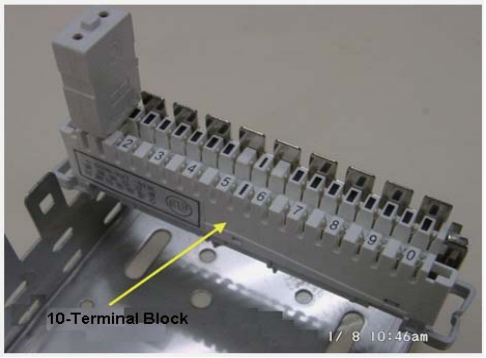

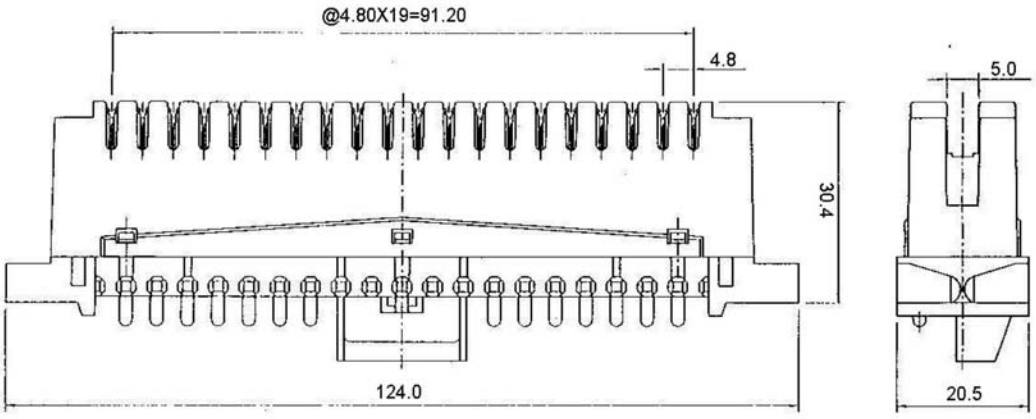

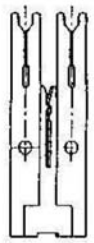

CONNECTION

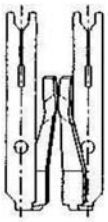

DISCONNECTION

Ordering Information

Telecom Block
MDF-LP-10C: 10 pair Disconnection module
MDF-HP-10C: 10 pair Connection module

Module mounting Pack
MDF-SEAT-xx: No. of module mounting pack
(xx:01,02,03,05,06,10,11,15,21,22,25,31,33)

Name Tag
MDF-TAG-10C: Name Tag

Chapter 3.
PDH

i MUX

TDM over IP

DSU/CSU

DXC

Managed G.703 E1 CSU/DSU Concentrator

ERM01

The ERM01 is a 4U 19(23)" concentrator rack type E1 DSU/CSU for Fractional and Unframed G.703 E1 Access for central office installations. There are 13 slots available for hot swappable G.703 E1 cards. An optional SNMP card can be installed into the last slot for configuration and management, leaving 12 slots available for G.703 cards. The SNMP card provides both local control via an RS-232 serial console port and remote IP management using Telnet or industry standard SNMP protocol. Each E1 card may be linked to a remote E1/FE1 stand-alone Access Unit for various LAN, Data, or hosts over E1 network services. The ERM01 accommodates an optional second hot swappable shared power supply module which may derive power from AC (90-250) or DC (-48V) power sources. On the rear panel, combinations of BNC, RJ-45 and wire-wrap terminals are utilized for E1 Line interface connections. Adapter cables are used to convert the HDB26F DCE data ports to V.35, RS-530, RS-449, X.21 or 10/100 Base Ethernet depending on the installed card.

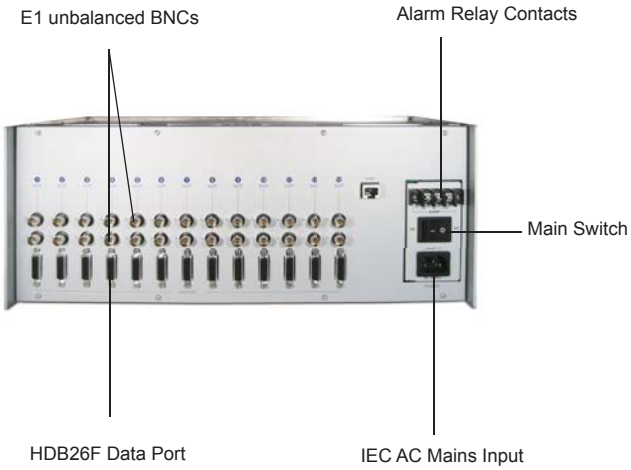

BNC+Data port mode chassis back view

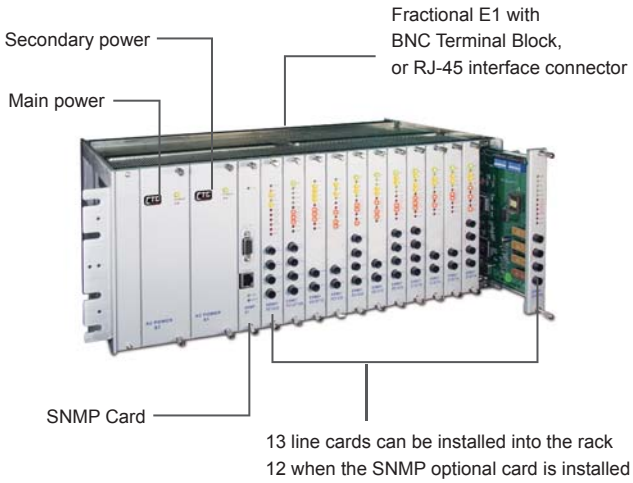

ERM01 Front and back view

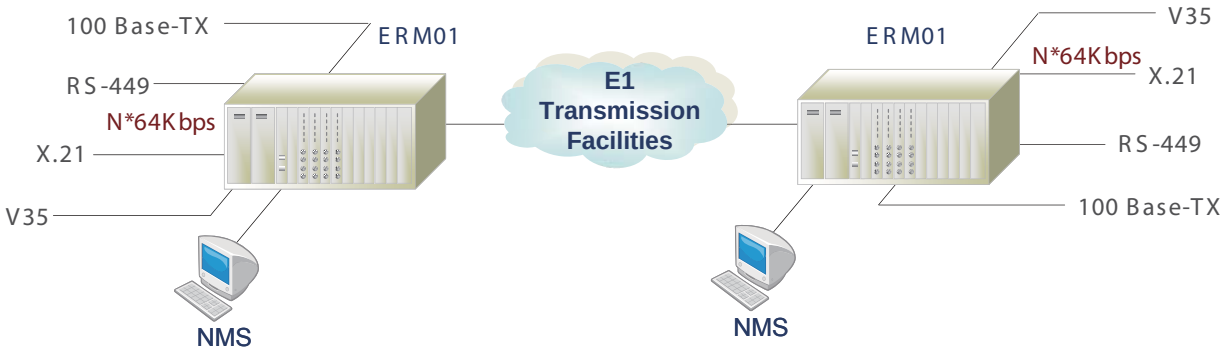

Features

- Managed chassis (Optional) with DSU/CSU blades
- Supports Fractional and Unframed E1 with EOC control
- Hot swappable blades and power modules
- Interface Cards for V.35, X.21, RS-530, RS-449, RS-232, Ethernet Bridge and Router
- I/O connectors all on rear panel
- Multiple clock source selection (Internal or External: E1 recovery, DTE or DCE)
- Built-in BERT with V.54 diagnostic capabilities for performing local and remote loopback
- Supports local serial Console, remote Telnet and SNMP
- Supported by SmartView EMS

G.703 E1	
Frame format	Unframed/ Framed, CCS(PCM31)/ CAS(PCM30)/ CRC4 on/off
Bit rate	2.048Mbps±50 ppm
Line Code	AMI/ HDB3
Receiving level	0 ~ -43dB
Line Impedance	75 ohm(BNC) / 120 ohm (RJ-45)
Jitter Performance	According to ITU-T G.823
Pulse amplitude	Nominal 2.37V ±10% for 75ohm, Nominal 3.00V ±10% for 120ohm Zero amplitude ± 0.1V
Connector	BNC for unbalanced, and RJ-45 for balanced
Transmit freq tracking	Internal timing ±30 ppm Loopback timing ±50 ppm External timing ±100 ppm
Return loss	12dB for 51 ~ 102KHz 18dB for 102 ~ 2048KHz 14dB for 2048~ 3072KHz
User Data Channel	RS-530/RS-449/RS-232,X.21/V.35, 10/100Base-T Ethernet Bridge & Router
Connector	High density DB26 Female
Line code	NRZ (except bridge)
Data Rate	N x 56Kbps or N x 64Kbps, Where N equal 1 to 32
Time slot allocation	User defined
Control signals	CTS constantly On, DSR constantly ON, except during test loops, DCD constantly ON or follows RTS, except during signal loss
Loopback	Line loopback, Payload loopback, Local loopback, DTE loopback
Clock modes	Clock mode 0 (DCE1) Rx & Tx clocks (recovered) to the sync. DTE Clock mode 1 (DCE2) Rx & Tx clocks (internal oscillator) to the sync. DTE Clock mode 2 (DTE1) Rx clock to the sync. Device, Tx clock from the sync. Device Clock mode 3 (DTE2) Rx & Tx clocks from the sync. DCE (from ETC and ERC pin) Clock mode 4 (DTE3) Rx & Tx clocks from the sync. DCE (all from ETC pin)
Standard	ITU-T G.703, G.704, G.706 and G.732 and ETSI ETS 300 420
Power Input	AC: 100~240VAC DC: -42~-55
Power Consumption	80W
Dimensions	Chassis : 285 x 438 x 180mm (D x W x H) Line card: 260 x 22 x 180mm (D x W x H)
Weight	6.6kg
Temperature	0~50°C (Operating) ,-10~70°C (Storage)
Humidity	10~90% non-condensing
Certification	CE, FCC, RoHS
MTBF	57,000 hrs (25°C)

Ordering Information

ERM01- □□□□□ Power type

AC-CH : AC power type chassis, w/ E1 BNC, RJ45
DC-CH : DC power type chassis, w/ E1 BNC, RJ45
R-AC-CH : AC power type chassis, w/ E1 RJ45
R-DC-CH : DC power type chassis, w/ E1 RJ45
B-AC-CH : AC power type chassis, w/ E1 BNC
B-DC-CH : DC power type chassis, w/ E1 BNC
AC : 100~240VAC power card
DC : 48VDC, 72VDC power card

Example: ERM01-R-AC-CH

ERM01- □□□□□ Optional card

SNMP
Fractional Interface cards
FE1/ET100
FE1/ET100R
FE1/V35
FE1/RS530
FE1/RS449
FE1/X21
FE1/RS422
Unframed Interface cards
E1U/ET100
E1U/ET100R
E1U/V35
E1U/RS530
E1U/RS449
E1U/X21
E1U/RS422

Example: ERM01-FE1/ET100

Network Management Card

ERM01-SNMP

This single slot card is installed in the last slot of the chassis, just before the power modules. The card has an RS-232 serial port on a DB9 female connector for connection of any standard dumb terminal for an easy menu driven configuration. The RJ-45 jack is a 10/100 Ethernet connector for IP based management. The SNMP card supports remote Telnet management with the same user friendly menu interface as local console. SNMP can be used by compiling the enterprise MIB into your favorite network management software.

Features

- RS-232 port for dumb terminal at 38.4k 8bit no parity
- Ethernet port for 10/100Base-TX compliant with IEEE802.3u
- SNMP V1 and V2C support
- MIB file compliant to MIB-II ASN.1
- Firmware upgrade by TFTP
- Hot swappable

Electrical Interface	Console RS232 port LAN 10/100Base-TX
Network Management	· Network management: provide all system software updates, and management system interaction through Ethernet port. · Out-band management: supports Telnet and SNMP , EMS · Configuration Management · Performance Management · Fault Management · Status Monitoring
Indications	PWR, Link SNMP
Dimensions	260 x 22 x 180mm (DxWxH)
Weight	250g
Temperature	0 ~ 50°C (Operating) -10 ~ 60°C (Storage)
Humidity	10 ~90% non-condensing
Certification	CE, FCC, LVD, RoHS
MTBF	65,000 hrs (25°C)

GUI Management

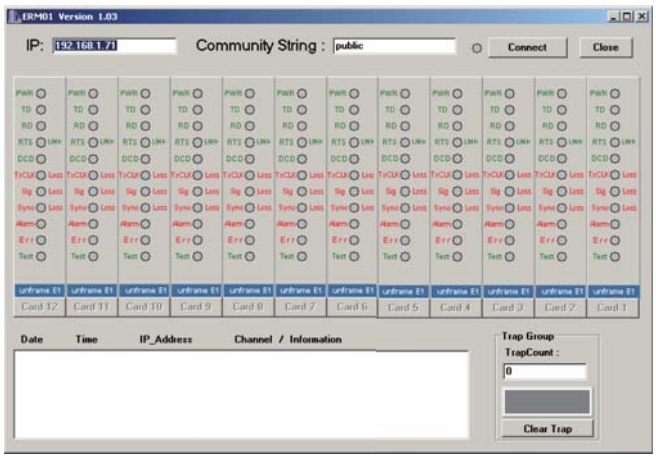

Serial Console Management

```
*************************************************************
******* CTC UNION TECHNOLOGIES CO., LTD *******
******* ERM-01 NMS Terminal Mode V4.01 *******
*************************************************************
Main Menu and Rack Status:
1:Slot #1 >> FE1 << || 7:Slot #7 >> FE1 <<
2:Slot #2 >> FE1 << || 8:Slot #8 >> FE1 <<
3:Slot #3 >> FE1 << || 9:Slot #9 >> FE1 <<
4:Slot #4 >> FE1 << || A:Slot #10 >> FE1 <<
5:Slot #5 >> FE1 << || B:Slot #11 >> FE1 <<
6:Slot #6 >> FE1 << || C:Slot #12 >> FE1 <<
Command Function Key:
'1' to '9', 'A' to 'C': I/O Cards Setting
'R': Refresh Status
'ESC' Logout
'S': System Configuration and TFTP Setup
'M': Manager Configuration Setup
```

Ordering Information

ERM01-SNMP

Fractional

Fractional E1 to 10/100Base-TX Ethernet Router Card

ERM01-FE1/ET100R

The ERM01-FE1/ET100R Router Card is a single slot card that can be installed in any available slot to provide IP over E1 transmission. The router engine uses an embedded system which can be configured and controlled from a serial port, Telnet or Web based user interface. It supports industry standard encapsulations of PPP and HDLC as well as proprietary header for Cisco router's HDLC.

Features

- Ethernet port IP Address/subnet mask
- WAN port IP Address/subnet mask
- Router Name / Password
- RS-232 Console Port Management
- Web/Telnet Management
- WAN port IP address/subnet mask
- DHCP server/client
- NAT Function
- Virtual Server Mapping
- SNMP MIB-2 supported
- Supports VPN pass through
- Forwarding IP multicast support
- DNS proxy server
- SNTP supported
- Simple Statistical
- Ping and Trace route
- Static Routing Setup
- Routing Table (manually set up to 32 entries minimum)
- Dynamic Routing RIP I & II, Send or Receive on Ethernet or WAN
- PPP, HDLC and Cisco HDLC WAN protocol encapsulatoin
- Flash Upgrade (via TFTP)

Hardware	Samsung ARM9 integrated communications 166MHz processor, 8MB Flash, and 32MB pipeline RAM for code, data and buffers
Connection	1 x Ethernet LAN port (10/100)
WAN Speed	Synchronous Port N56/N64 up to 2048Kbps
LAN Speed	Ethernet LAN port 10/100 Mbps
Function	Proxy Routing, IP Routing, Static Routing, Dynamic Routing, DHCP Client/ DHCP Server, IP Mapping, Packet Filtering
Protocols	PPP, NAT, RIP 1/2, TCP/IP
Security	PAP/CHAP, NAT, Filter
LED	Link/ACT : On=link ; Flash=Activity 100 : On=100Base ; Off=10Base

Fractional E1 to 10/100Base-TX Ethernet Bridge Card

ERM01-FE1/ET100

The ERM01-FE1/ET100 Bridge Card is a single slot card that can be installed in any available slot to provide Ethernet over E1 transmission. The bridge engine uses an ASIC design for wire speed performance and supports industry standard HDLC encapsulation. The ERM01-E1U-ET100 bridge is an economical solution for LAN to LAN applications over an Unframed E1 transport.

Features

- High performance bridge for 10Base-T or 100Base-TX Ethernet extension.
- Auto-MDI/MDIX detects and corrects crossed cable.
- Ethernet LAN Interface on RJ-45 connector.
- Transparent half / Full duplex support on WAN / LAN interface.
- Automatic LAN table learning and aging.
- IEEE 802.3x flow control.
- Filter mode (pure bridge) or repeater mode selectable
- Provides Ethernet over E1 economically
- No IP address settings required
- Simple DIP switch setting to control filtering, packet buffer and Ethernet auto/forced mode

Bridge	LAN Table: 256 MAC address with 5 minute automatic aging Filtering and Forwarding : wire speed Packet size; 64~1522 Bytes Buffer : 340 frames Delay : 1 frame
LAN	Standard : compliant to IEEE802.3 /803.2u Data rate : 10Base-T / 100Base-TX, Full or Half Duplex Connector : RJ45
General	IP bridging over G.703 E1 ISO standard HDLC encapsulation WAN Speed: Nx64 (where N=1 to 31) for Fractional E12048Kbps for Unframed E1

Fractional E1 to Data Card

ERM01-FE1/Data

The high-speed data cards are available in two E1 types; one for fractional E1 and one for Unframed E1 (transparent) and with data communication interfaces for V.35, RS-530, X.21 and RS-449(V.36). All line cards come with adapter cables that terminate in the appropriate user interface for DCE. Simple DIP Switch settings provide all the control for E1 and Dataport settings. When the ERM01 is equipped with optional SNMP, centralized management can configure and monitor the card and performance without manual DIP setting.

Features

- HS (up to 2Mb/s) Serial interface card for serial transport over G.703 E1.
- DIP switch or SNMP managed (Optional)
- Hot swappable without effecting any other line card
- Front panel pushbuttons to activate loop testing with integral 511 pattern BERT.
- LED status indicators for E1 Signal, Sync and Dataport TD, RD, and CD.

Specifications

- Compliant with ITU-T standards for V.35, RS-530, X.21 and V.36
- Synchronous transmission at Nx64 data rate (2.048M for Unframed)
- Line code: NRZ
- Control Signals: CTS always ON

Cable Adapter :

HDB26M to MB34F for V.35
HDB26M to DB25F for RS-530
HDB26M to DB37F for RS-449(V.36)
HDB26M to DB15F for X.21

Ordering Information

ERM01-□□□□□ Optional card

FE1/ET100
FE1/ET100R
FE1/V35
FE1/RS530
FE1/RS449
FE1/X21
FE1/RS422

Example: ERM01-FE1/ET100

Unframed

Unframed E1 to 10/100Base-TX Ethernet Router Card

ERM01-E1U/ET100R

The ERM01-E1U/ET100R Router Card is a single slot card that can be installed in any available slot to provide IP over E1 transmission. The router engine uses an embedded system which can be configured and controlled from a serial port, Telnet or Web based user interface. It supports industry standard encapsulations of PPP and HDLC as well as proprietary header for Cisco router's HDLC.

Features

- Ethernet port IP Address/subnet mask
- WAN port IP Address/subnet mask
- Router Name / Password
- RS-232 Console Port Management
- Web/Telnet Management
- WAN port IP address/subnet mask
- DHCP server/client
- NAT Function
- Virtual Server Mapping
- SNMP MIB-2 supported
- Supports VPN pass through
- Forwarding IP multicast support
- DNS proxy server
- SNTP supported
- Simple Statistical
- Ping and Trace route
- Static Routing Setup
- Routing Table (manually set up to 32 entries minimum)
- Dynamic Routing RIP I & II, Send or Receive on Ethernet or WAN
- PPP, HDLC and Cisco HDLC WAN protocol encapsulatoin
- Flash Upgrade (via TFTP)

Hardware	Samsung ARM9 integrated communications 166MHz processor, 8MB Flash, and 32MB pipeline RAM for code, data and buffers
Connection	1 x Ethernet LAN port (10/100)
WAN Speed	Synchronous Port 2048Kbps
LAN Speed	Ethernet LAN port 10/100 Mbps
Function	Proxy Routing, IP Routing, Static Routing, Dynamic Routing, DHCP Client/ DHCP Server, IP Mapping, Packet Filtering
Protocols	PPP, NAT, RIP 1/2, TCP/IP
Security	PAP/CHAP, NAT, Filter
LED	Link/ACT : On=link ; Flash=Activity 100 : On=100Base ; Off=10Base

Unframed E1 to 10/100Base-TX Ethernet Bridge Card

ERM01-E1U/ET100

The ERM01-E1U/ET100 Bridge Card is a single slot card that can be installed in any available slot to provide Ethernet over E1 transmission. The bridge engine uses an ASIC design for wire speed performance and supports industry standard HDLC encapsulation. The ERM01-E1U-ET100 bridge is an economical solution for LAN to LAN applications over an Unframed E1 transport.

Features

- High performance bridge for 10Base-T or 100Base-TX Ethernet extension.
- Auto-MDI/MDIX detects and corrects crossed cable.
- Ethernet LAN Interface on RJ-45 connector.
- Transparent half / Full duplex support on WAN / LAN interface.
- Automatic LAN table learning and aging.
- IEEE 802.3x flow control.
- Filter mode (pure bridge) or repeater mode selectable
- Provides Ethernet over E1 economically
- No IP address settings required
- Simple DIP switch setting to control filtering, packet buffer and Ethernet auto/forced mode

Bridge	LAN Table: 256 MAC address with 5 minute automatic aging Filtering and Forwarding : wire speed Packet size; 64~1522 Bytes Buffer : 340 frames Delay : 1 frame
LAN	Standard : compliant to IEEE802.3 /803.2u Data rate : 10Base-T / 100Base-TX, Full or Half Duplex Connector : RJ45
General	IP bridging over G.703 E1 ISO standard HDLC encapsulation WAN Speed: Nx64 (where N=1 to 31) for Fractional E12048Kbps for Unframed E1

Unframed E1 to Data Card

ERM01-E1U/Data

The high-speed data cards are available in two E1 types; one for fractional E1 and one for Unframed E1 (transparent) and with data communication interfaces for V.35, RS-530, X.21 and RS-449(V.36). All line cards come with adapter cables that terminate in the appropriate user interface for DCE. Simple DIP Switch settings provide all the control for E1 and Dataport settings. When the ERM01 is equipped with optional SNMP, centralized management can configure and monitor the card and performance without manual DIP setting.

Features

- HS (2Mb/s) Serial interface card for serial transport over G.703 E1.
- DIP switch or SNMP managed (Optional)
- Hot swappable without effecting any other line card
- Front panel pushbuttons to activate loop testing with integral 511 pattern BERT.
- LED status indicators for E1 Signal, Sync and Dataport TD, RD, and CD.

Specifications

- Compliant with ITU-T standards for V.35, RS-530, X.21 and V.36
- Synchronous transmission at 2.048Mbps
- Line code: NRZ
- Control Signals: CTS always ON

Cable Adapter :

HDB26M to MB34F for V.35
HDB26M to DB25F for RS-530
HDB26M to DB37F for RS-449(V.36)
HDB26M to DB15F for X.21

Ordering Information

ERM01- □□□□□ Optional card

E1U/ET100
E1U/ET100R
E1U/V35
E1U/RS530
E1U/RS449
E1U/X21
E1U/RS422

Example: ERM01-E1U/ET100

4U 13 Slot Managed T1(DS1) Concentrator

TRM01

The TRM01 is a 4U 19(23)" rack type T1 DSU/CSU for unframed T1 and Fractional T1 Digital Access which is nested in a hub to provide solutions for central office installations. There are 13 slots available for hot swappable T1 (DS1) cards for installation into the TRM01 rack. An optional SNMP card can be installed into the last slot for configuration and management, leaving 12 slots available for T1 (DS1) cards. The SNMP card provides both local control via an RS-232 serial console port and remote management using industry standard SNMP protocol via an Ethernet 10BASE-T connection. Each T1 (DS1) card may be linked to a remote T1/FT1 stand-alone Access Unit for various LAN, Video Conference, or hosts over T1 (DS1) network services. The TRM01 accommodates an optional second hot swappable shared power supply module which may derive power from AC (90-250) or DC (-48V) power sources. On the rear panel, combinations of RJ-45 and wire-wrap terminals are utilized for T1 (DS1) Line interface connections. Adapter cables are used to convert the HDB26F DCE data ports to V.35, RS-530, RS-449, X.21 or 10/100 Base Ethernet depending on the installed card.

Features

- Supports Fractional T1 and Unframed T1 service
- Hot swappable cards
- Removable interfaces, support V35, X21, RS530, RS449, RS232, Ethernet Bridge and Router
- I/O connectors on rear panel
- Multiple clock source selection (Internal or External: T1 recovery, DTE or DCE)
- Supports Console and SNMP management
- Performing local and remote loopback

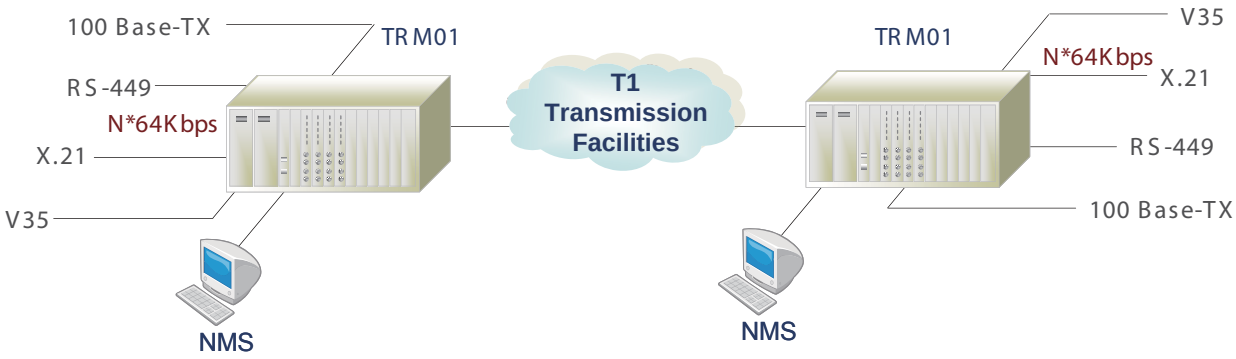

TRM01 Front and back view

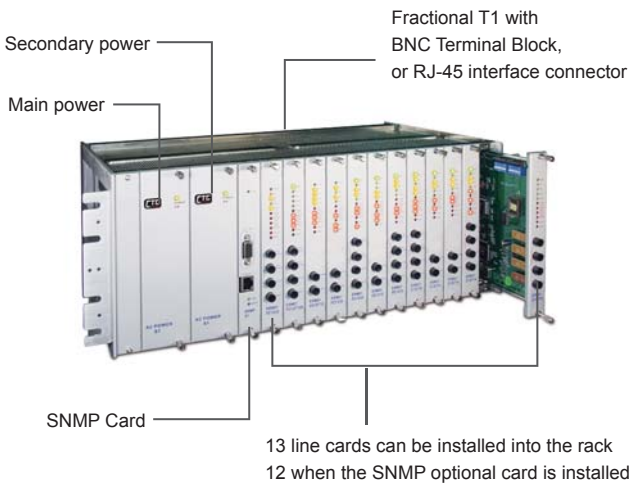

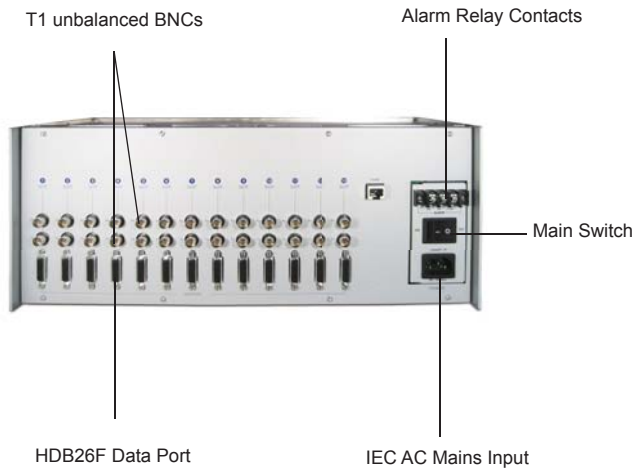

BNC+Data port mode chassis back view

Ports	T1 Interface Frame format: Unframed, SF (D4), ESF Bit rate: 1.544Mbps Line Code: B8ZS / AMI Receiving level: 0 to -36dB Pulse amplitude: Nominal 3.0V ±10% Zero amplitude: ±0.1V Transmit frequency tracking : Internal timing±30 ppm Loopback timing±50 ppm, External timing±100 ppm Jitter Performance: According to ITU-T G.824 Connector: RJ-45 (balanced) Data Interface Interface types: RS-530/RS-449/RS-232, X.21/V.35, 10/100Base-T Ethernet Bridge & Router Connector: HDB26 Female Line code: NRZ (except bridge) Data Rate: 1.544Mbps (Unframed/framed) Nx56kbps or Nx64Kbps Time slot allocation: user defined
Indications	Power, TD, RD, Error, Test, Signal loss, Sync loss, Alarm LED: Sync Loss, Signal Loss, Alarm (AIS, MRAI, RAI), TD, RD, Error, Test.
Standard	ITU-T G.703, G.704, G.706,G.733, G.824, ANSI T1.403, AT&T TR-62411
Power Input	AC: 100~240VAC DC: -36~-76
Power Consumption	80W
Dimensions	Chassis: 285 x 438 x 180mm (D x W x H) Line card: 260 x 22 x 180mm (D x W x H)
Weight	6.6kg
Temperature	0~50°C (Operating) ,0~70°C (Storage)
Humidity	10~90% non-condensing
Certification	CE, FCC, RoHS
MTBF	57,000 hrs (25°C)

Ordering Information

TRM01-□□□□□ Power type

AC-CH : AC power type chassis, w/ T1 RJ45
DC-CH : DC power type chassis, w/ T1 RJ45
AC : 100~240VAC power card
DC: 48VDC, 72VDC power card

Example: TRM01-AC-CH

TRM01-□□□□□ Optional card

Fractional Interface cards
ET100
ET100R
V35
RS530
RS449
X21
RS422

Example: TRM01-ET100

SNMP Management Card

TRM01-SNMP

This single slot card is installed in the last slot of the chassis, just before the power modules. The card has an RS-232 serial port on a DB9 female connector for connection of any standard dumb terminal for an easy menu driven configuration. The RJ-45 jack is a 10/100 Ethernet connector for IP based management. The SNMP card supports a remote Telnet management with the same user friendly menu interface as local console. SNMP can be used by compiling the enterprise MIB into your favorite network management software.

Features

- RS-232 port for dumb terminal at 38.4k 8bit no parity
- Ethernet port for 10/100Base-TX compliant with IEEE802.3u
- SNMP V1 and V2C support
- MIB file compliant to MIB-II ASN.1
- Firmware upgrade by TFTP
- Hot swappable

Electrical Interface	Console RS232 port LAN 10/100Base-TX
Network Management	· Network management: provide all system software updates, and management system interaction through Ethernet port. · Out-band management: supports Telnet and SNMP , EMS · Configuration Management · Performance Management · Fault Management · Status Monitoring
Indications	PWR, Link SNMP
Dimensions	260 x 22 x 180mm (DxWxH)
Weight	250g
Temperature	0 ~ 50°C (Operating) -10 ~ 60°C (Storage)
Humidity	10 ~90% non-condensing
Certification	CE, FCC, LVD, RoHS
MTBF	65,000 hrs (25°C)

Serial Console Management

```
*****************************************************************
******* CTC UNION TECHNOLOGIES CO., LTD *******
******* ERM-01 NMS Terminal Mode V4.01 *******
*****************************************************************
Main Menu and Rack Status:
1:Slot #1 >> FE1 << || 7:Slot #7 >> FE1 <<
2:Slot #2 >> FE1 << || 8:Slot #8 >> FE1 <<
3:Slot #3 >> FE1 << || 9:Slot #9 >> FE1 <<
4:Slot #4 >> FE1 << || A:Slot #10 >> FE1 <<
5:Slot #5 >> FE1 << || B:Slot #11 >> FE1 <<
6:Slot #6 >> FE1 << || C:Slot #12 >> FE1 <<
Command Function Key:
'1' to '9', 'A' to 'C': I/O Cards Setting
'R': Refresh Status
'ESC' Logout
'S': System Configuration and TFTP Setup
'M': Manager Configuration Setup
```

Ordering Information

TRM01-SNMP

Fractional T1 to Data Card

TRM01-Data

The high-speed data cards are available in two T1 types; one for fractional T1 and one for Unframed T1 (transparent) and with data communication interfaces for V.35, RS-530, X.21 and RS-449(V.36). All line cards come with adapter cables that terminate in the appropriate user interface for DCE. Simple DIP Switch settings provide all the control for T1 and Dataport settings. When the TRM01 is equipped with optional SNMP, centralized management can configure and monitor the card and performance without manual DIP setting.

Features

- HS (up to 1.544Mb/s) Serial interface card for serial transport over G.703 T1.
- DIP switch or SNMP managed (Optional)
- Hot swappable without effecting any other line card
- Front panel pushbuttons to activate loop testing with integral 511 pattern BERT.
- LED status indicators for T1 Signal, Sync and Dataport TD, RD, and CD.

Specifications

- Compliant with ITU-T standards for V.35, RS-530, X.21 and V.36
- Synchronous transmission at Nx64 data rate (1.544M for Unframed)
- Line code: NRZ
- Control Signals: CTS always ON

Cable Adapter :

HDB26M to MB34F for V.35
HDB26M to DB25F for RS-530
HDB26M to DB37F for RS-449(V.36)
HDB26M to DB15F for X.21

Fractional T1 to 10/100Base-TX Ethernet Bridge Card

TRM01-ET100

The TRM01-ET100 Bridge Card is a single slot card that can be installed in any available slot to provide Ethernet over T1 transmission. The bridge engine uses an ASIC design for wire speed performance and supports industry standard HDLC encapsulation. The TRM01-ET100 bridge is an economical solution for LAN to LAN applications over an Fractional T1 transport.

Features

- High performance bridge for 10Base-T or 100Base-TX Ethernet extension.
- Auto-MDI/MDIX detects and corrects crossed cable.
- Ethernet LAN Interface on RJ-45 connector.
- Transparent half / Full duplex support on WAN / LAN interface.
- Automatic LAN table learning and aging.
- IEEE 802.3x flow control.
- Filter mode (pure bridge) or repeater mode selectable
- Provides Ethernet over T1 economically
- No IP address settings required
- Simple DIP switch setting to control filtering, packet buffer and Ethernet auto/forced mode

Bridge	LAN Table: 256 MAC address with 5 minute automatic aging Filtering and Forwarding : wire speed Packet size; 64~1522 Bytes Buffer : 340 frames Delay : 1 frame
LAN	Standard : compliant to IEEE802.3 /803.2u Data rate : 10Base-T / 100Base-TX, Full or Half Duplex Connector : RJ45
General	IP bridging over G.703 T1 ISO standard HDLC encapsulation WAN Speed: Nx64 (where N=1 to 24) for Fractional T1, 1544Kbps for Unframed T1

Fractional T1 to 10/100Base-TX Ethernet Router Card

TRM01-ET100R

The TRM01-ET100R Router Card is a single slot card that can be installed in any available slot to provide IP over T1 transmission. The router engine uses an embedded system which can be configured and controlled from a serial port, Telnet or Web based user interface. It supports industry standard encapsulations of PPP and HDLC as well as proprietary header for Cisco router's HDLC.

Features

- Ethernet port IP Address/subnet mask
- WAN port IP Address/subnet mask
- Router Name / Password
- RS-232 Console Port Management
- Web/Telnet Management
- WAN port IP address/subnet mask
- DHCP server/client
- NAT Function
- Virtual Server Mapping
- SNMP MIB-2 supported
- Supports VPN pass through
- Forwarding IP multicast support
- DNS proxy server
- SNTP supported
- Simple Statistical
- Ping and Trace route
- Static Routing Setup
- Routing Table (manually set up to 32 entries minimum)
- Dynamic Routing RIP I & II, Send or Receive on Ethernet or WAN
- PPP, HDLC and Cisco HDLC WAN protocol encapsulatoin
- Flash Upgrade (via TFTP)

Hardware	Samsung ARM9 integrated communications 166MHz processor, 8MB Flash, and 32MB pipeline RAM for code, data and buffers
Connection	1 x Ethernet LAN port (10/100)
WAN Speed	Synchronous Port N56/N64 up to 1544Kbps
LAN Speed	Ethernet LAN port 10/100 Mbps
Function	Proxy Routing, IP Routing, Static Routing, Dynamic Routing, DHCP Client/ DHCP Server, IP Mapping, Packet Filtering
Protocols	PPP, NAT, RIP 1/2, TCP/IP
Security	PAP/CHAP, NAT, Filter
LED	Link/ACT : On=link ; Flash=Activity 100 : On=100Base ; Off=10Base

Ordering Information

TRM01- □□□□□ Optional card

ET100 : Fractional T1 to 10/100Base-Tx Ethernet Bridge
ET100R : Fractional T1 to 10/100Base-Tx Ethernet Router
V35 : Fractional T1(N56) to V.35
RS530 : Fractional T1(N56) to RS530
RS449 :Fractional T1(N56) to RS449
X21 :Fractional T1(N56) to X.21
RS422 :Fractional T1(N56) to RS422

Example: TRM01-ET100

Single Modular Port E1 CSU/DSU w/ LCD and SNMP

ETU01A

The ETU01A single port stand-alone DSU/CSU provides our best digital access solution for E1 and Fractional E1 network services termination. A DTE device may be linked to an ETU01A at data rates of 56Kbps to 2048Kbps. The ETU01A features user replaceable dataport modules for a number of interface standards; including Ethernet bridge, router, V.35, X.21, RS-530, RS-449, G.703 64Kbps Co-directional and RS-232. The ETU01A supports local control and diagnostics via LCD display, keypad and LED status indicators located on the front panel as well as via a menu driven RS-232 console port in conjunction with a standard terminal.

These features enable users to easily configure the unit, execute the in-service diagnostics and monitor the network status. The ETU01A provides optional SNMP (Simple Network Management Protocol), which allows the user to remotely control, diagnose and monitor the system using industry standard SNMP protocol, our proprietary MIB-II, and any network management software.

Features

- Supports Fractional E1 and Unframed E1 service with EOC control
- Removable interfaces, support V35, X21, RS530, RS449, RS232, G.703 Co-directional, NRZ, Ethernet Bridge and Router
- I/O connectors on rear panel
- Multiple clock source selection (Internal or External: E1 recovery, DTE or DCE)
- Supports Console, Telnet and SNMP management
- Menu keys and LCD display
- Supported by EMS
- Built-in BERT with V.54 diagnostic capabilities for performing local and remote loopback

G.703 E1 Specifications	
Framing	Framed CCS (PCM31) CAS (PCM30) / Unframed CRC4 on/off
Line Code	AMI/ HDB3
LCD display	16*2 character LCD with backlight
Bit rate	N*56K or N*64Kbps, where N=1~31 in CCS or 1~30 in CAS
Relative receive level	0 to -43dB
Transmit level:	
Pulse Amplitude	Nominal 2.37V ±10% for 75ohm Nominal 3.00V ±10% for 120ohm Zero amplitude ±0.1V
Jitter performance	According to ITU-T G.823
Connectors	BNC(unbalanced), RJ-48(balanced)
Clock modes:	
Clock mode 0 (DCE1)	Receive & transmit clock (recovered) to the sync. DTE
Clock mode 1 (DCE2)	Receive & transmit clock (internal oscillator) to the sync. DTE
Clock mode 2 (DTE1)	Receive clock to the sync. and transmit clock from the sync. device
Clock mode 3 (DTE2)	Receive and transmit clock from the sync. DCE (from ETC and ERC pin)
Clock mode 4 (DTE3)	Receive and transmit clock from the sync. DCE (all from ETC pin)l
Diagnostics	loopback,Digital remote loopback, Test pattern
Indications	LEDs (Power, TD, RD, RTS, DCD, Singal loss, Sync loss, Alarm)
Standard	ITU-T G.703/G.704/G.706 & G.732
Power Input	AC: 90-250VAC, DC: 18-72 VCD
Power Consumption	10W
Dimensions	250 x 195 x 45mm (D x W x H)
Weight	1.5kg
Temperature	0~50°C (Operating) ,-1~70°C (Storage)
Humidity	10~90% non-condensing
Certification	CE, FCC, LVD, RoHS
MTBF	65,000 hrs (25°C)

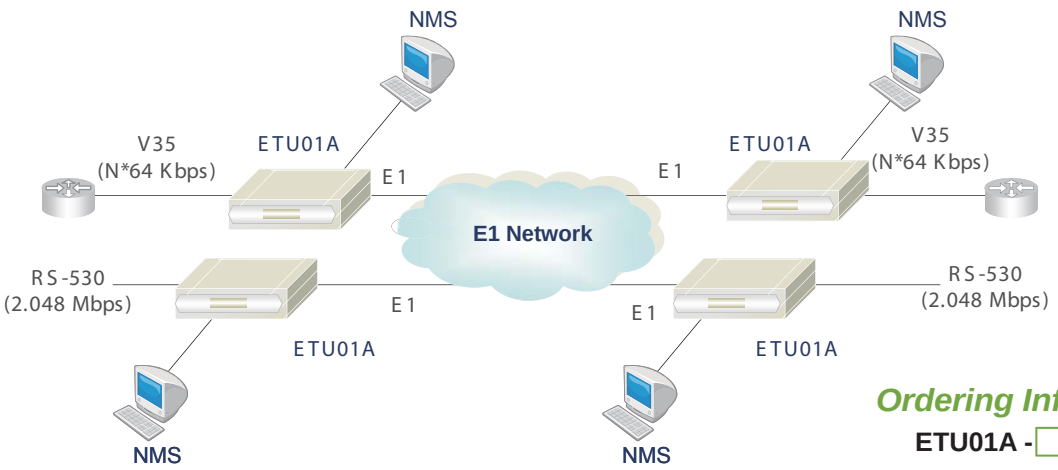

Ordering Information

ETU01A - □□□□□ Power type

AC : AC power
DC : DC power
AD :AC+DC power

Example: ETU01A-AC

Please refer to page 3-18 for optional interface modules.

Single Modular Port E1 CSU/DSU

ETU011

ETU01

ETU011

The ETU011 stand-alone DSU/CSU is a digital access unit for Unframed E1, Fractional E1, or Fractional cascaded E1 service. The ETU01 data channel supports user-selectable transmission rates via randomly selected E1 timeslots, which provides integral multiples of 64kbps, up to a maximum 2.048Mbps (unframed), for a line attenuation of up to 43 dB on twisted pair or coax cable. This provides an approximate operating range up to 2km (using 22AWG). The ETU01 packs the data channels into the E1 link in user-selected time slots. The unused time slots can insert IDLE code (in frame mode). The ETU011 front panel sports status LEDs for monitoring both the CSU and DSU conditions and push button switches for initiating local and remote loopback with integral BERT.

Features

- Supports Fractional E1 and Unframed E1 service with EOC control
- Removable interfaces, support V35, X21, RS530, RS449, RS232, G.703 Co-directional, NRZ, Ethernet Bridge and Router
- I/O connectors on rear panel
- Multiple clock source selection
- (Internal or External: E1 recovery, DTE or DCE)
- Built-in BERT with V.54 diagnostic capabilities for performing local and remote loopback

G.703 E1 Specifications	Framing: Framed CCS (PCM31) CAS (PCM30) / UnframedCRC4 on/off Line Code: AMI/ HDB3 Relative receive level: 0 to -43dB Transmit level : Pulse Amplitude: Nominal 2.37V ±10% for 75ohm Nominal 3.00V ±10% for 120ohm Zero amplitude ±0.1V Jitter performance: According to ITU-T G.823 Connectors: BNC(unbalanced), RJ-48(balanced) Clock modes : Clock mode 0 (DCE1): Receive & transmit clock (recovered) to the sync. DTE Clock mode 1 (DCE2): Receive & transmit clock (internal oscillator) to the sync. DTE Clock mode 2 (DTE1): Receive clock to the sync. and transmit clock from the sync. device Clock mode 3 (DTE2): Receive and transmit clock from the sync. DCE (from ETC and ERC pin) Clock mode 4 (DTE3): Receive and transmit clock from the sync. DCE (all from ETC pin) Test Switches: Digital local loopback, Analog local Diagnostics: Digital local and remote loopback, Analog local loopback, Test pattern
Indications	LEDs (Power, TD, RD, RTS, DCD, Singal loss, Sync loss, Alarm)
Standard	ITU-T G.703/G.704/G.706 & G.732
Power Input	AC: 90-250VAC , DC: -18 ~ -75 VCD
Power Consumption	10W
Dimensions	250 x 195 x 45mm (D x W x H)
Weight	510g
Temperature	0~50°C (Operating) ,-10~70°C (Storage)
Humidity	10~90% non-condensing
Certification	CE, FCC, RoHS
MTBF	57,000 hrs (25°C)

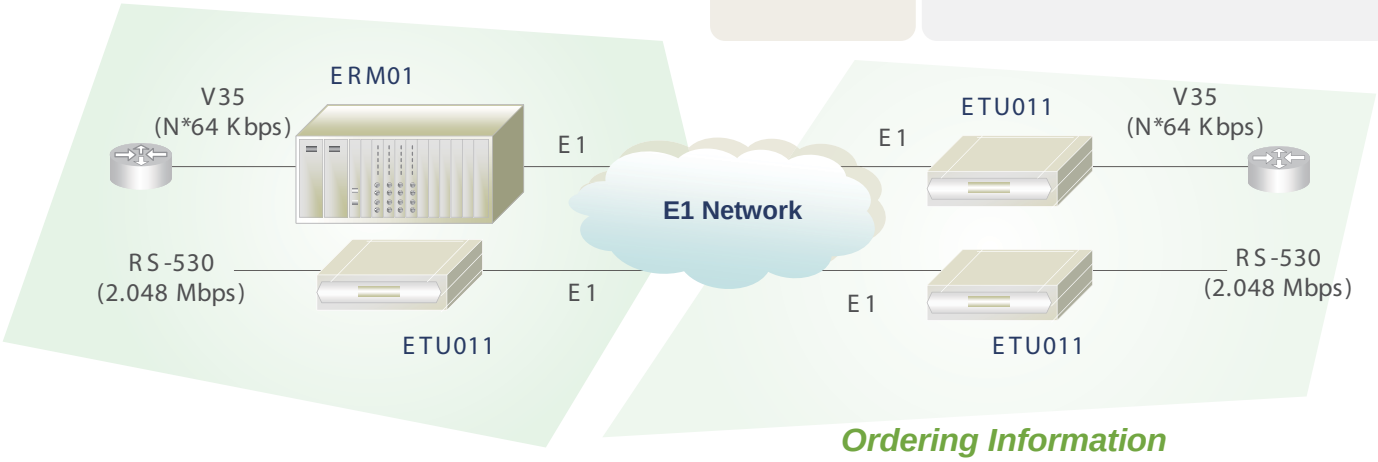

Ordering Information

ETU011 - □□□□□ Power type

AC : AC power
DC : DC power

Example: ETU011-AC

Please refer to page 3-18 for optional interface modules.

Single Modular Port Unframed E1 CSU/DSU
ETU01-U

The ETU01U stand-alone DSU/CSU is a digital access unit for Unframed E1 service termination. The ETU01U data channel supports 2.048Mbps, for a line attenuation of up to 43 dB on twisted pair or coax cable. This provides an approximate operating range up to 2km (using 22AWG).The ETU01U front panel sports status LEDs for monitoring both the CSU and DSU condition and push button switches for initiating local and remote loopback with integral BERT.

The ETU01U features user replaceable data port modules for a number of interface standards; including Ethernet bridge, router, V.35, X.21, RS-530, and RS-449. The ETU01U fully meets EI specifications including ITU-T G.703, G.706, G.732, and G.823.

Features

- Supports Unframed E1 (2.048Mbps)
- Removable interfaces, support V35, X21, RS530, RS449, NRZ, Ethernet Bridge and Router
- I/O connectors on rear panel
- Multiple clock source selection (Internal or External: E1 recovery, DTE or DCE)
- Built-in BERT with V.54 diagnostic capabilities for performing local and remote loopback

G.703 E1 Specifications	Framing Unframed Line Code AMI/ HDB3 Bit rate 2.048Mbps (clear channel) Relative receive level 0 to -43dB Transmit level : Pulse Nominal 2.37V ±10% for 75ohm Amplitude Nominal 3.00V ±10% for 120ohm Zero amplitude ±0.1V Jitter performance According to ITU-T G.823 Connectors BNC(unbalanced), RJ-48(balanced) Clock modes : Clock mode 0 (DCE1) Receive & transmit clock (recovered) to the sync. DTE Clock mode 1 (DCE2) Receive & transmit clock (internal oscillator) to the sync. DTE Clock mode 2 (DTE1) Receive clock to the sync. and transmit clock from the sync. device Clock mode 3 (DTE2) Receive and transmit clock from the sync. DCE (from ETC and ERC pin) Clock mode 4 (DTE3) Receive and transmit clock from the sync. DCE (all from ETC pin) Test Switches Digital local loopback, Analog local Diagnostics Digital local and remote loopback, Analog local loopback, Test pattern
Indications	LEDs (Power, TD, RD, RTS, DCD, Signal loss, Sync loss, Alarm)
Standard	ITU-T G.703/G.706 & G.732
Power Input	AC: 90-250VAC ; DC: 18-72 VCD
Power Consumption	10W
Dimensions	250 x 195 x 45mm (D x W x H)
Weight	1.5kg
Temperature	0~50°C (Operating) ,-10~70°C (Storage)
Humidity	10~90% non-condensing
Certification	CE, FCC, RoHS
MTBF	57,000 hrs (25°C)

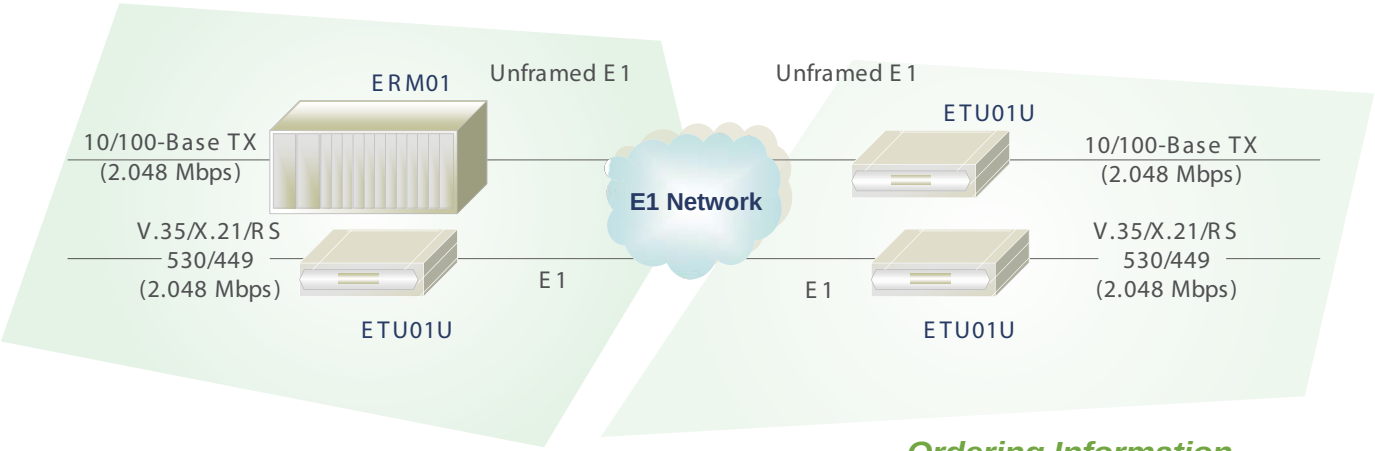

Ordering Information

ETU01U- □□□□□ Power type

AC : AC power
DC24 : 24VDC
DC48 : 48VDC

Example: ETU01U-AC

Please refer to page 3-18 for optional interface modules.

Single V35 Port E1 CSU/DSU

ETU01-Plus

The ETU01-Plus stand-alone DSU/CSU is a digital access unit for Unframed E1 or Fractional E1 service. The ETU01-Plus data channel supports user-selectable transmission rates via randomly selected E1 timeslots, which provides integral multiples of 64kbps, up to a maximum 2.048Mbps (unframed), for a line attenuation of up to 43 dB on twisted pair or coax cable. This provides an approximate operating range up to 2km (using 22AWG). The ETU01-PLUS packs the data channels into the E1 link in user-selected time slots. The ETU01-Plus front panel sports status LEDs for monitoring the CSU and DSU conditions and pushbutton switches for initiating local and remote loopback with integral BERT. The ETU01-Plus features a fixed on-board V.35 interface.

Features

- Supports Fractional E1 and Unframed E1 service with EOC control
- Model with fixed V.35 interface for price critical applications
- I/O connectors all located on rear panel
- Multiple clock source selection

  (Internal or External: E1 recovery, DTE or DCE)
- Built-in BERT with V.54 diagnostic capabilities for performing local and remote loopback

G.703 E1 Specifications	
FrFraming	Framed CCS (PCM31) CAS (PCM30) / UnframedCRC4 on/off
Line Code	AMI/ HDB3
Data rate	N*56K or N*64Kbps, where N=1~31 in CCS or N equal 1~30 in CAS
Relative receive level	to -43dB
Transmit level	
Pulse Amplitude	Nominal 2.37V ±10% for 75 ohm Nominal 3.00V ±10% for 120 ohm Zero amplitude ±0.1V
Jitter performance	According to ITU-T G.823
Connectors	BNC(unbalanced), RJ-48(balanced)
Clock modes :	
Clock mode 0 (DCE1)	Receive & transmit clock (recovered) to the sync. DTE
Clock mode 1 (DCE2)	Receive & transmit clock (internal oscillator) to the sync. DTE
Clock mode 2 (DTE1)	Receive clock to the sync. and transmit clock from the sync. device
Clock mode 3 (DTE2)	Receive and transmit clock from the sync. DCE (from ETC and ERC pin)
Clock mode 4 (DTE3)	Receive and transmit clock from the sync. DCE (all from ETC pin)
Indications	LEDs (Power, TD, RD, RTS, DCD, Singal loss, Sync loss, Alarm)
Standard	ITU-T G.703/G.704/G.706 & G.732
Power Input	AC: 90-250VAC , DC: -18 ~ -75 VCD
Power Consumption	10W
Dimensions	195 x 160 x 45mm (D x W x H)
Weight	510g
Temperature	0~50°C (Operating) ,-10~70°C (Storage)
Humidity	10~90% non-condensing
Certification	CE, FCC, RoHS
MTBF	55,000 hrs (25°C)

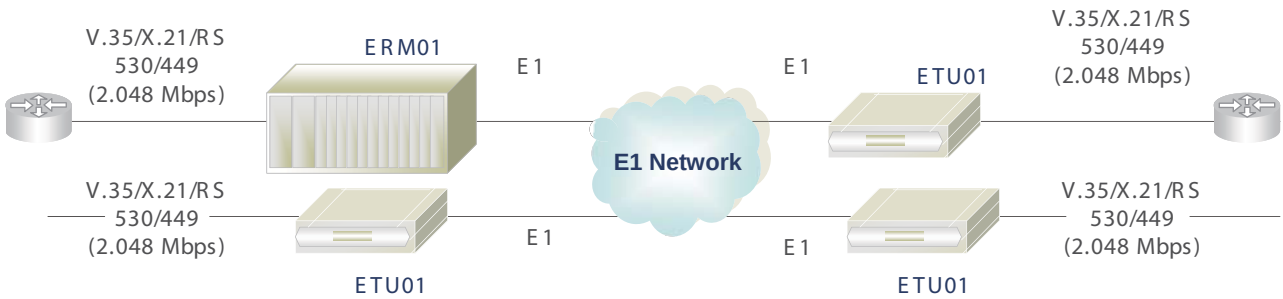

Ordering Information

ETU01-Plus- □□□□□ Power type

AC : AC power
DC : DC power

Example: ETU01-Plus-AC

Single Port Unframed E1 CSU/DSU

G703E1-U

The G703E1U stand-alone DSU/CSU is a compact, digital access unit for Unframed E1 service termination. The G703E1U data channel supports 2.048Mbps, for a line attenuation of up to 43 dB on twisted pair or coax cable. This provides an approximate operating range up to 2km (using 22AWG). The G703E1U top panel sports status LEDs for monitoring both the CSU and DSU condition and slide switches for initiating digital or analog loopback.

Features

- Supports Unframed E1
- Support fixed V35, X21, RS530, RS449 with cable adapter
- Easily configure with simple DIP switches (DTE, DCE, Framing, time slot, clock mode, etc.)
- Multiple clock source selection (Internal or External: E1 recovery, DTE or DCE)
- Performing local and remote loopback

G.703 E1 Specifications	Framing	Unframed
	Line Code	HDB3
	Bit rate	2.048Mbps
	Relative receive level	0 to -43dB
	Transmit level	
	Pulse Amplitude	Nominal 2.37V ±10% for 75ohm Nominal 3.00V ±10% for 120ohm Zero amplitude ±0.1V
	Jitter performance	According to ITU-T G.823
	Connectors	BNC(unbalanced), RJ-48(balanced)
	CRC check	CRC-4 enable/disable
Data port Specifications	Type	RS530, V35, RS449, X21
	Line code	NRZ
	Data rate	64kbps ~ 2.048Mbps
	Connector	DB25F
Indications		LEDs (E1 signal, timing loss)
Standard		ITU-T G.703, G.706 and G.823
Power Input		9VDC
Power Consumption		4W
Dimensions		135 x 79 x 28mm (D x W x H)
Weight		180g
Temperature		0~50°C (Operating) ,0~70°C (Storage)
Humidity		10~90% non-condensing
Certification		CE, FCC, RoHS
MTBF		57,000 hrs (25°C)

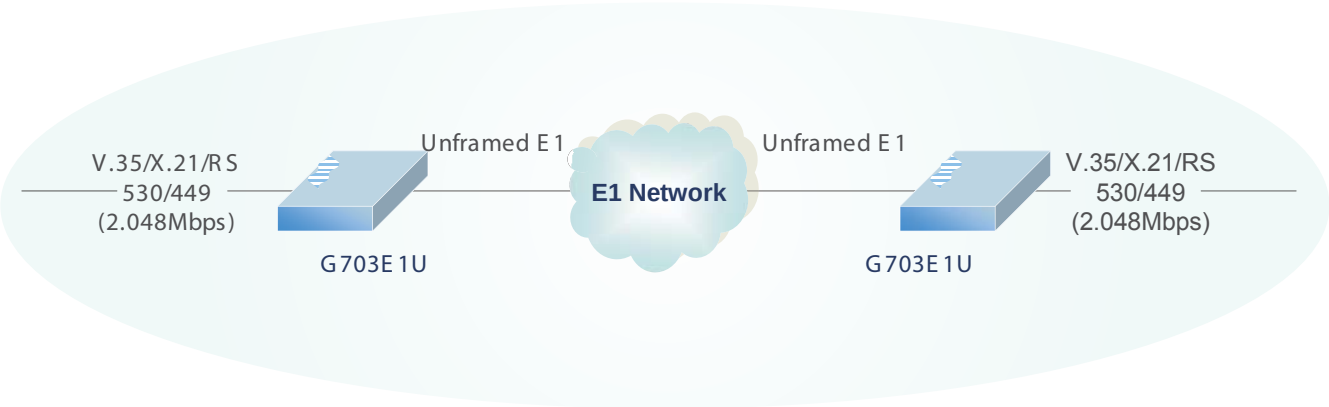

Ordering Information

G703E1-U

Single Modular Port T1 (DS1) CSU/DSU

TTU01

The TTU01 stand-alone DSU/CSU is a digital access unit for Unframed T1 or Fractional T1 service termination. The TTU01 data channel supports user-selectable transmission rates via randomly selected T1 (DS1) timeslots, which provides integral multiples of 56/64kbps, up to a maximum 1.544Mbps (unframed). The TTU01 packs the data channels into the T1 (DS1) link in user-selected time slots. The TTU01 front panel sports status LEDs for monitoring both the CSU and DSU conditions and push button switches for initiating local and remote loopback with integral BERT. The TTU01 features user replaceable data port modules for a number of interface standards; including Ethernet bridge, Ethernet router, V.35, X.21, RS-530, RS-449, G.703 64Kbps Co-directional and RS-232.

Features

- 1U half-19" supports Fractional T1 and Unframed T1
- Removable interfaces, support V35, X21, RS530, RS449, RS232,
- NRZ, Ethernet Bridge and Router
- I/O connectors on rear panel
- Multiple clock source selection
  (Internal or External: T1 recovery, DTE or DCE)
- Built-in BERT with V.54 diagnostic capabilities for performing local and remote loopback

E1 interface	T1 Interface Frame format: Unframed, SF (D4), ESF Bit rate: 1.544Mbps Line Code: B8ZS / AMI Line impedance: 100 ohms Receiving level: 0 to -36dB Pulse amplitude: Nominal 3.0V ±20% Zero amplitude: ±0.1V Transmit frequency tracking : Internal timing±30 ppm Loopback timing±50 ppm, External timing±100 ppm Jitter Performance: According to ITU-T G.824 Connector: 15 Pin D type female , Bantam Data Interface Interface types: V.35, RS530, RS449, RS232, X.21, NRZ 10/100Base-T Ethernet Bridge & Router Line code: NRZ (except bridge) Data Rate: 1.544Mbps (Unframed/framed) Nx56kbps or Nx64Kbps Time slot allocation: user defined
Indications	Power, TD, RD, Error, Test, Signal loss, Sync loss, Alarm LED: Sync Loss, Signal Loss, Alarm (AIS, MRAI, RAI), TD, RD, Error, Test.
Standard	ITU-T G.703, G.704, G.706,G.733, ANSI T1.403, AT&T TR-62411
Power Input	AC: 100~240VAC DC24: -18~-36VDC, DC48: -36~-76VDC
Power Consumption	10W
Dimensions	255 x 195 x 45mm (D x W x H)
Weight	1.5kg
Temperature	0~50°C (Operating) ,-10~70°C (Storage)
Humidity	10~90% non-condensing
Certification	CE, FCC, RoHS
MTBF	57,000 hrs (25°C)

Ordering Information

TTU01

Please refer to page 3-18 for optional interface modules.

Interface Modules for ETU and TTU Family Access Units

ETU/TTU

When purchasing one of our single or multi-port access units or multiplexers that support user replaceable interface modules, our ETU/TTU interface modules provide easily selectable electrical interfaces for a wide selection of user applications. In addition to standard datacom interfaces such as V.35, RS-530, X.21, RS-449, etc. Ethernet modules are also available for bridging or routing of Ethernet over E1 or T1 network services.

V.35 Interface

ETU/TTU-V35

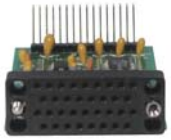

Features

Compliant with ITU-T V.35 standards
Winchester type 34-pin MB34 M-Block female connector
Synchronous data rate at Nx64 (where N=1 to 32)
Data Communications Equipment interface Electrically compatible to ITU-T V.11 (RS-422)

RS-530 Interface

ETU/TTU-530

Features

Compliant with Category 1 EIA-530 (Balanced) 25-pin D Sub female connector
Synchronous data rate at Nx64 (where N=1 to 32)
Data Communications Equipment interface Electrically compatible to RS-422

X.21 Interface

ETU/TTU-X21

Features

Compliant with ITU-T X.21 standard (Balanced)
15-pin D Sub female connector
Synchronous data rate at Nx64 (where N=1 to 32)
Data Communications Equipment interface Electrically compatible to V.11

RS-449(V.36) Interface

ETU/TTU-449

Features

Compliant with EIA/TIA-530-A (Balanced)
37-pin D Sub female connector
Synchronous data rate at Nx64 (where N=1 to 32)
Data Communications Equipment interface Electrically compatible to RS-422

RS-232 Interface

ETU/TTU-232

Features

Compliant with EIA RS-232-C (Unbalanced)
Compatible to ITU-T V.24 25-pin D Sub female connector
Synchronous data rate at 64 or 128Kb/s Asynchronous (transparent) at up to 19.2K or 38.4K Data Communications Equipment interface

G.703 64K Co-directional Interface

ETU/TTU-G64

Features

Pulse shape compliant with ITU-T G.703
Clock frequency: 64KHz
Pulse Amplitude: 1.0V
Zero Amplitude: 0V
Impedance: 120 Ohms
15-Pin D Sub connector
Range: up to 800m with 24AWG

Non-Return to Zero Interface

ETU/TTU-NRZ

Features

4 BNC connectors: TxD,TxC,RxD and RxC (Data&Clock)
NRZ line coding Logic "1" 0V +/- 0.3V Logic "0" -1.5V +/- 0.3V
Synchronous data rate Nx64 (where N=1 to 32)

Ordering Information

ETU/TTU- □□□□□ Module type

ET100 : 10/100TX Ethernet card
ET100R : 10/100TX Router card
V35 : V35 interface card
X21 : X21 interface card
RS530 : RS530 interface card
RS449 : RS449 interface card
RS232 : RS232 interface card
G64 : G703 64K co-directional card
NRZ : NRZ interface card

Example: ETU/TTU-ET100

10/100 Base-TX Ethernet Router

ETU/TTU-ET100R

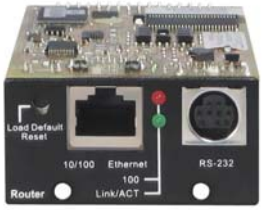

When the E1/T1 standalone access units are installed with an ET100R Interface, the unit is not only an access unit for E1 or T1 but also becomes a high performance WAN Router for 10/100BASE-T Ethernet extension. The ET100R Ethernet Router interface module for CTC Union's ETU/TTU Series DSU/CSU Access Units may be accessed via the RS-232 asynchronous communication port, a serial crossover cable (provided) and text based terminal emulation software (Hyper Terminal TM). Once an IP address has been established for the subnet, the ET100R may also be accessed via Telnet. The serial port and Telnet configuration menus are identical and may include password protection.

Features

- Ethernet port IP Address/subnet mask
- WAN port IP Address/subnet mask
- Router Name / Password
- RS-232 Console Port Management
- Web/Telnet Management
- WAN port IP address/subnet mask
- DHCP server/client
- NAT Function
- Virtual Server Mapping
- SNMP MIB-2 supported
- Supports VPN pass through
- Forwarding IP multicast support
- DNS proxy server
- SNTP supported
- Simple Statistical
- Ping and Trace route
- Static Routing Setup
- Routing Table (manually set up to 32 entries minimum)
- Dynamic Routing RIP I & II, Send or Receive on Ethernet or WAN
- PPP, HDLC and Cisco HDLC WAN protocol encapsulatoin
- Flash Upgrade (via TFTP)

Hardware	Samsung ARM9 integrated communications 166MHz processor, 8MB Flash, and 32MB pipeline RAM for code, data and buffers
WAN Speed	Synchronous Port N56/N64 up to 2048Kbps
LAN Speed	Ethernet LAN port 10/100 Mbps
Function	Static Routing, Dynamic Routing, DHCP Client/ DHCP Server, IP Mapping, Packet Filtering
Protocols	PPP, NAT, RIP 1/2, TCP/IP
Security	PAP/CHAP, NAT, Filter
LED	Link/ACT : On=link ; Flash=Activity 100 : On=100Base ; Off=10Base

CLI Commnads

```
ET100R#show interface summary

name      hw type    hw addr            ip addr       ip mask      status

eth1      Ethernet   00:02:AB:06:00:01  192.168.0.1   255.255.255.0    up
hdlc1     Cisco HDLC ------             192.168.1.1   255.255.255.192  up
lo        Loopback   ------             127.0.0.1     255.0.0.0        up


ET100R#show ip route


Kernel IP routing table
Destination   Gateway      Genmask         Flags Metric Ref    Use Iface
192.168.1.0   0.0.0.0      255.255.255.192 U     0      0        0 hdlc1
192.168.0.0   0.0.0.0      255.255.255.0   U     0      0        0 eth1


ET100R#
```

Web GUI Management

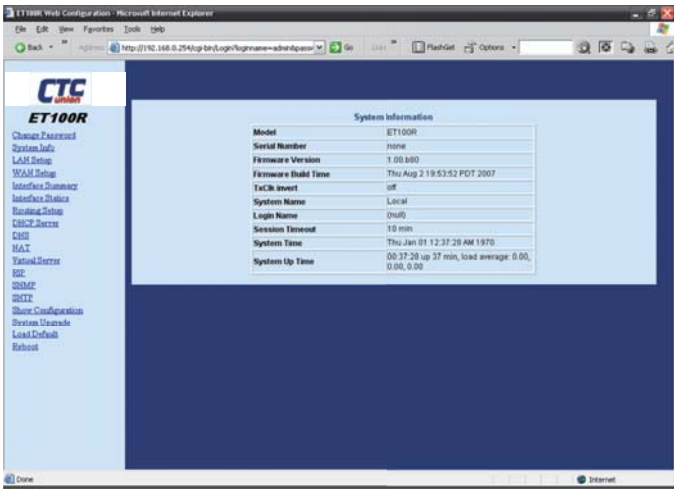

Ordering Information

ETU/TTU-ET100R : fractional router card

10/100 Base-TX Ethernet Bridge

ETU/TTU-ET100

The ET100 Network Bridge is a high performance remote, self-learning, Ethernet bridge. Its compact size and low cost makes it ideal for cost-sensitive bridging applications, or as a LAN extender or segmenter over bit stream type infrastructures. ET100 Provides an Ethernet (IEEE802.3u) Bridge function over the WAN when matched to another ET100 module, ET100 standalone, or a compatible bridge utilizing standard HDLC (ISO 13239) protocol. The interface connection is a shielded RJ-45 connector for 10/100Base Ethernet and auto-MDIX. Operates at any n56/n64 fractional or unframed E1 speed.

Features

- High performance bridge for 10Base-T or 100Base-TX Ethernet extension.
- Auto-MDI/MDIX detects and corrects crossed cable.
- Ethernet LAN Interface on RJ-45 connector.
- Transparent half / Full duplex support on WAN / LAN interface.
- Automatic LAN table learning and aging.
- IEEE 802.3x flow control.
- Filter mode (pure bridge) or repeater mode selectable
- Provides Ethernet over E1 economically
- No IP address settings required
- Simple DIP switch setting to control filtering, packet buffer and Ethernet auto/forced mode

Bridge	LAN Table: 256 MAC address with 5 minute automatic aging Filtering and Forwarding : wire speed Packet size; 64~1522 Bytes Buffer : 340 frames Delay : 1 frame
LAN	Standard : compliant to IEEE802.3 /803.2u Data rate : 10Base-T / 100Base-TX, Full or Half Duplex Connector : RJ45
General	IP bridging over G.703 E1 ISO standard HDLC encapsulation WAN Speed: Nx64 (where N=1 to 31) for Fractional E1 2048Kbps for Unframed E1

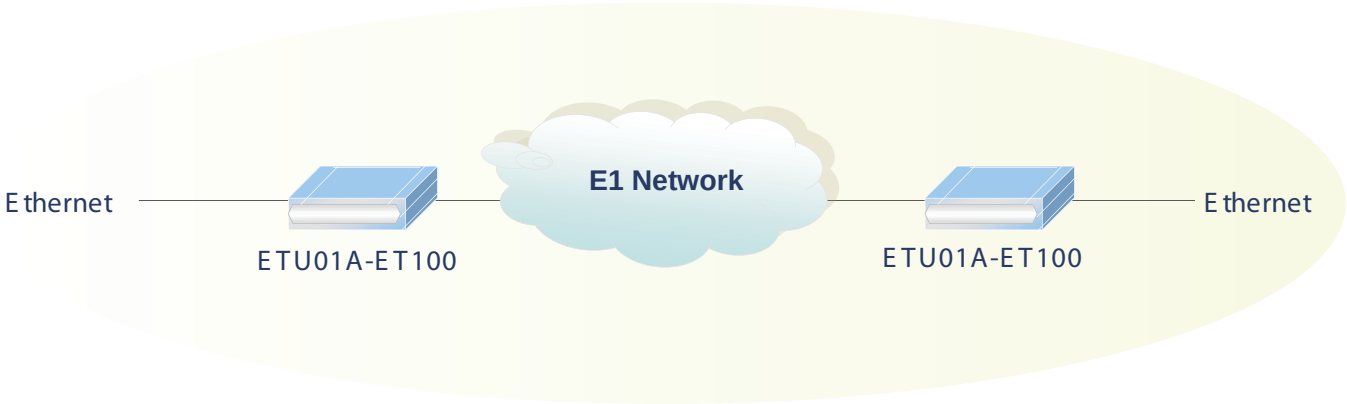

Ordering Information

ETU/TTU-ET100: fractional router card

4U 12 slot E1/T1 Cross Rate Converter Rack

ETRM01

The ETRM01 is a 4U 19(23)" concentrator rack for E1 and T1 Cross Rate Converters in central office installations. There are 13 slots available for hot swappable FTEC cards. An optional SNMP card can be installed into the last slot for configuration and management, leaving 12 slots available for FTEC cards. The SNMP card provides both local control via an RS-232 serial console port and remote IP management using Telnet or industry standard SNMP protocol. Each E1 card may be linked to a remote E1/T1 PABX or a stand-alone FTEC Unit. The ETRM01 accommodates an optional second hot swappable shared power supply module which may derive power from AC (90-250) or DC (-48V) power sources. On the rear panel, combinations of BNC and RJ-45 connectors are utilized for E1 and T1 Line interface connections.

Features

- Support G.802 Annex B
- Enables equipment to operate at T1 and E1 rates.
- Converts between T1 and E1 data and signaling.
- Configurable A-law/u-law and signaling conversion.
- Transparent conversion at 64kbps timeslot level.
- Controlled slip for buffer over/underflow.
- The 24 timeslots of T1(Nx64) can be inserted into E1(Nx64), 30/CAS or 31/CCS timeslots.
- Local/remote loopback test capabilities on both T1 and E1 interface.
- Complies with ITU-T G.703, G.704, G.823, G.824 recommendations.
- Function setting via internal DIP switch setting or Console Port. (When SNMP card installed) Timing selection:
  - Transparent timing,
  - T1/E1 recovery timing
  - Internal timing (1.544Mbps/2.048Mbps)
  - External timing (1.544Mbps/2.048Mbps)
  - Loopback timing

ETRM01 Front and back view

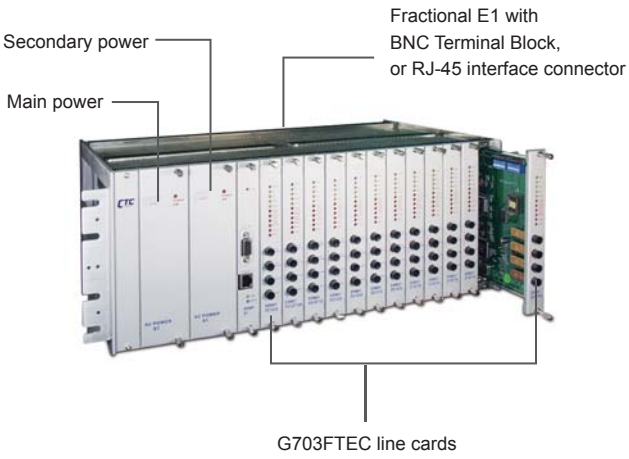

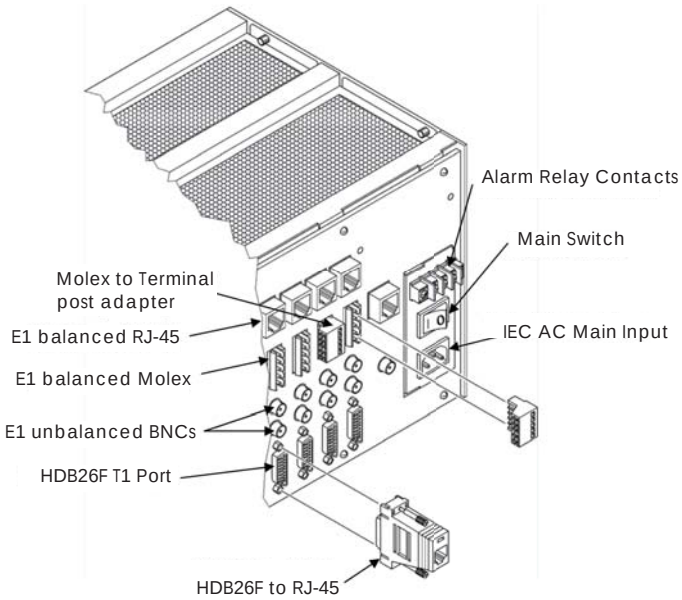

E1 Interface

Standard : ITU-T G.703 Recommendations

Bit rate : 2.048Mb/s

Line code : HDB3

Frame format : CAS/PCM30 or CCS/PCM31 selectable

Voice channel sample rule : A-Law

CRC check : CRC-4 enable/disable

Impedance : 75 or 120 Ohm selectable

Transmit pulse level : 75 Ohm 2.37V (±10%)

120 Ohm 3.0V (±10%)

Connectors : BNC, RJ-45

T1 Interface

Standard : ITU-T G.703 Recommendations

Bit rate : 1.544Mb/s

Line code : B8ZS

Frame format : D4 or ESF selectable

Voice channel sample rule : u-Law

CRC check : CRC-6 enable/disable

Impedance : 100 Ohm

Transmit pulse level : 3.0V (±10%)

Connectors : RJ-45

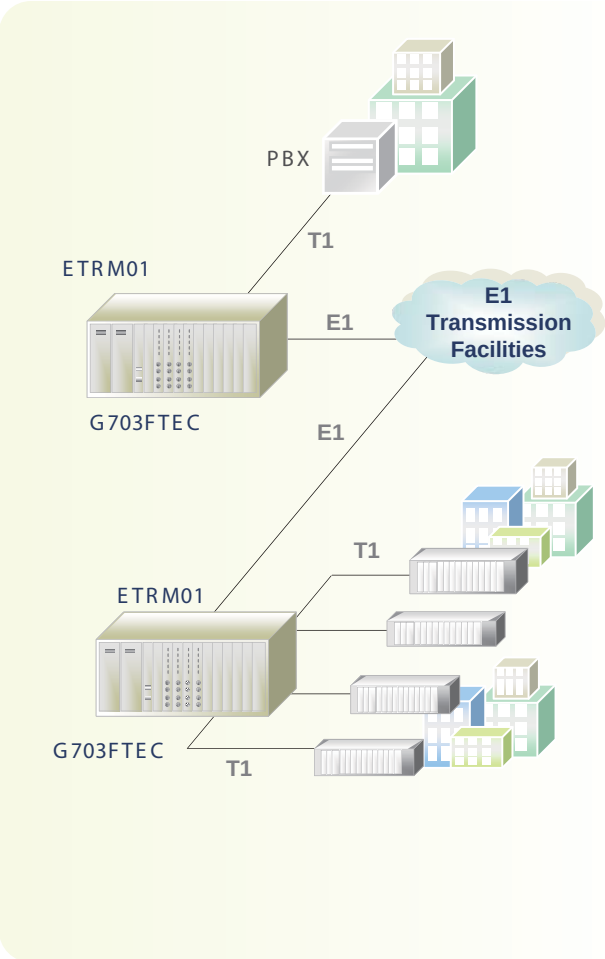

Timeslot Mapping Selectable

E1/CAS mode : TS1-TS15, TS17-TS31, any 24 timeslots.
E1/CCS mode : TS1-TS31, any 24 timeslots.

Timing Source

Internal timing : 1544KHz / 2048KHz ± 50 ppm
Transparent : Loopback timing
E1 recovery timing : T1 recovery timing

Elastic buffer

Buffer length : ± 2 T1 Frames
Underflow : A frame of data was repeated
Overflow : A frame of data was deleted

Unconnected Codes

FF Hex code on unused timeslots

Alarm Responses

Received impairment on E1 : Loss Of Signal
Transmitted response on E1 : Remote Alarm Indication (RAI)
Transmitted response on T1 : Yellow Alarm
Received impairment on T1 : Loss Of Signal
Transmitted response on T1 : Yellow alarm
Transmitted response on E1 : Remote Alarm Indication (RAI)

Diagnostic Tests

T1 Local loopback pushbutton
T1 Remote loopback pushbutton
E1 Local loopback pushbutton
E1 Remote loopback pushbutton

Indicators

Power : Failure
LED indicators for both T1 and E1
Signal Loss : Frame Loss
BPV : AIS
Slip : Yellow Alarm
Loop Test

Power Source

AC 90~240V
DC -48V

Physical

Dimension: 28.5 x43.7 x17.7cm (D x W x H)
11.2 x 17.2 x 7 in (L x W x H)
Weight : 10.5 Kg (23.1 lb) chassis net weight

Environment

Temperature : 0-50°C (32-125°F)
Humidity : Up to 90% Non-condensing

Ordering Information

ETRM01-□□□□□ Power type

AC : AC power
DC : DC power

Example: ETRM01-AC

ETRM01-□□□□□ Optional card

SNMP
FTEC

Example: G703FTEC

Network Management Card

ETRM01-SNMP

This single slot card is installed in the last slot of the chassis, just before the power modules. The card has an RS-232 serial port on a DB9 female connector for connection of any standard dumb terminal for an easy menu driven configuration. The RJ-45 jack is a 10/100 Ethernet connector for IP based management. The SNMP card supports a remote Telnet management with the same user friendly menu interface as local console. SNMP can be used by compiling the enterprise MIB into your favorite network management software.

Features

- RS-232 port for dumb terminal at 38.4k, 8bit, no parity
- Ethernet port for 10/100Base-TX compliant with IEEE802.3u
- SNMP V1 and V2C support
- MIB file compliant to MIB-II ASN.1
- Firmware upgrade by TFTP
- Hot swappable

E1,T1 cross rate Slide-in card

ETRM01-FTEC

The ETRM01-FTEC is E1,T1 cross rate card. The timeslot cross connect enables the conversion between one T1 signal and one E1 signal. T1 and E1 signals with frames employ u-Law and A-Law compander encoding principles respectively and encode those analog signals into 64kbits digital data. The E1 interface supports CCS (PCM31)or CAS (PCM30) frames with or without CRC-4 and with HDB3 line coding. The T1 interface supports D4 or ESF frame formats with B8ZS or AMI line code. Multiple clock source selection provides maximum flexibility in connecting both T1 and E1.

Features

- Converts between T1 and E1 data and signaling
- Enable equipment to operate at T1 and E1 rates
- Support G.802 Annex B
- Configures A-law/m-law and signaling conversion
- Transparent conversion at 64kbps timeslot level
- Controlled slip for buffer over or under flow
- 24 timeslots of T1 Nx64 can be inserted into E1 Nx64,
- 30/CAS or 31/CCS timeslots

Ordering Information

ETRM01- □□□□□ Optional card

SNMP

FTEC

Example: G703FTEC

Single T1 to E1 Converter

G703FTEC

The G703-FTEC is 1U half 19" stand-alone or rack mountable T1 (US Standard), E1 (European Standard) converter and timeslot cross connect which enables conversion between one T1 signal and one E1 signal. T1 and E1 signals with frames employ u-Law and A-Law compander encoding principles respectively and encode those analog signals into 64kbits digital data. The E1 interface supports CCS (PCM31) or CAS (PCM30) frames with or without CRC-4 and with HDB3 line coding. The T1 interface supports D4 or ESF frame formats with B8ZS or AMI line code. Multiple clock source selection provides maximum flexibility in connecting both T1 and E1. The clock source may be from the T1 recovery clock, from the E1 recovery clock, from the internal oscillator, from an external clock or via transparent timing. All setup controls can be performed via internal DIP switch settings or via the RS-232 console port and ASCII terminal. Tests and diagnostics can easily be performed from the front panel pushbutton switches. Diagnostics include T1 local/remote and E1 local/remote loop back.

Features

- Converts between T1 and E1 data and signaling
- Enable equipment to operate at T1 and E1 rates
- Support G.802 Annex B
- Configures A-law/μ-law and signaling conversion
- Transparent conversion at 64kbps timeslot level
- Controlled slip for buffer over or under flow
- 24 timeslots of T1 Nx64 can be inserted into E1 Nx64, 30/CAS or 31/CCS timeslots

Interface	E1 interface Framing: CAS/PCM30 or CCS/PCM31 selectable Bit rate: 2.048Mbps Line Code: HDB3 Line Impedance: 75 ohm (BNC) / 120 ohm (RJ-45) Voice channel sample rule A-Law CRC check: CRC-4 enable/disable Pulse amplitude: Nominal 2.37V ±10% for 75ohm, Nominal 3.00V ±10% for 120ohm Zero amplitude: ±0.1V Connector: RJ-45 and BNC pair T1 interface Framing: D4, ESF selectable Bit rate: 1.544Mbps Line Code: B8ZS / AMI Equalization: 0 ~655 feet settable Voice channel sample rule u-Law CRC check: CRC-6 when ESF Line Impedance: 100 ohms Transmit Pulse level: 3.0V ±10%, Receive signal level: 0 ~-10dB Connector: RJ-45 and Bantam Jacks
Indications	Power Alarm
Standard	ITU-T G.703, G.704, G.706, G.823, G.824, ANSI T1.403
Power Input	AC: 100~240VAC DC24: -18 ~36VDC, DC48: -36 ~72VDC
Power Consumption	15W
Dimensions	235 x 195 x 45mm (D x W x H)
Weight	1.6kg
Temperature	0~50°C (Operating) ,0~70°C (Storage)
Humidity	10~90% non-condensing
Certification	CE, FCC, RoHS
MTBF	57,000 hrs (25°C)

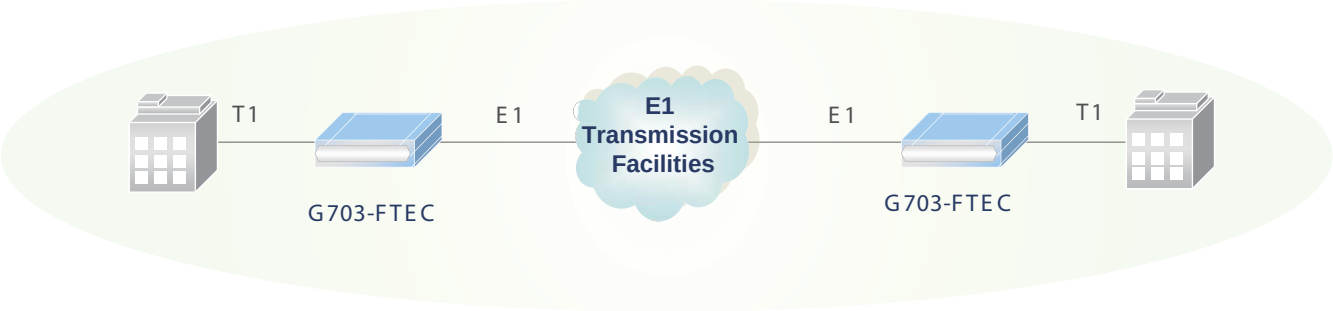

Ordering Information

G703FTEC-□□□□□ Model type

AC : AC power
DC : DC power

Example: G703FTEC-AC

4U, 10 I/O Slot Data, Ethernet, Voice E1 Managed Multiplexer

ERM-Mux/Plus

The ERM-Mux/plus is a 4U 19(23)" 14 slot rack type E1 Time Division Multiplexer for Fractional E1 network access which is designed for non-stop operation.There are 10 slots available for hot-swappable ERM-Mux/plus-I/O cards. Two slots are provided for Mux-E1 cards, which may be configured as four separate E1links or for redundant 1+1 operation of the E1 lines, safe guarding against expensive network down time. Two slots are also available for CPU cards, with the second CPU card acting as a hot standby in case of primary card failure. Each Mux-E1 card may be linked to another ERM-Mux/plus Rack to provide a point-to-point variety of datacom, Ethernet & voice over E1 network services. The ERM-Mux/plus optionally accommodates up to two separate powerpplies, which may derive power from AC (110/220) or DC (-48V) power sources. When two power supplies are installed, the modules provide complete power redundancy and are hot swappable even during the E1 cards' transmission. The ERM-Mux/plus provides all interface connections on the front panel. BNC and RJ-45 are used for E1 Line interface connections, RJ-45 connections are used for all voice (FXO, FXS, E&M), for 10/100 Ethernet Bridge and G.703-64K co-directional / contra-directional / center. Optional cable adapters are used to convert the DB-62F DCE ports of the I/O cards to 6xRS-232, HP68F DCE port of I/O card to 4x V.35, RS-232, RS-530, RS-449, RS-422 and X.21 or 5x X.50 channels.

ERM-Mux/plus Front view

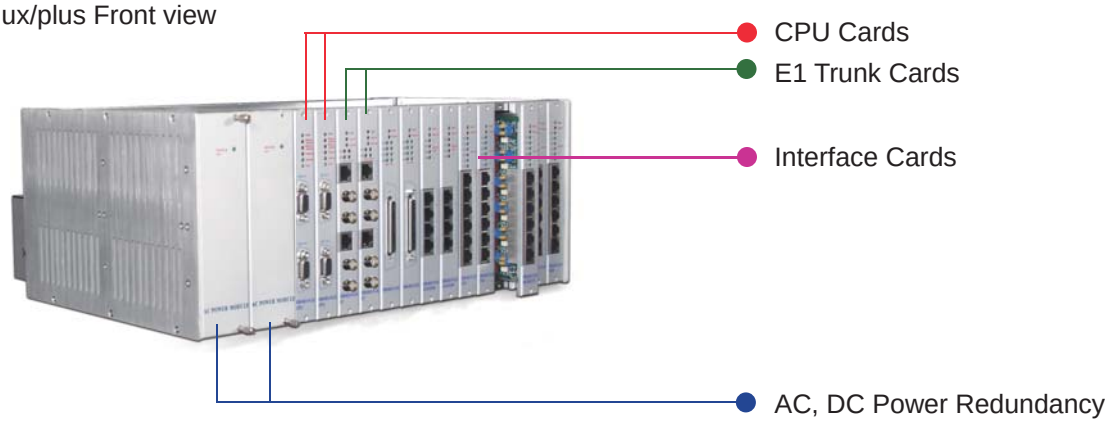

ERM-Mux/plus Back view

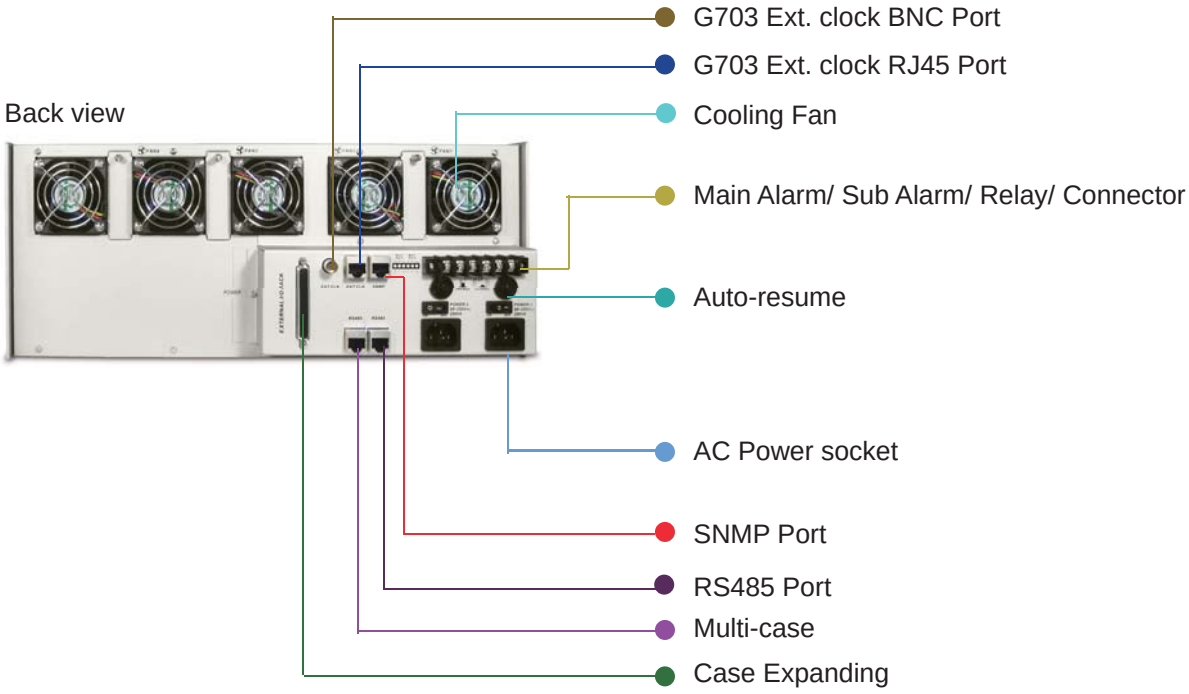

Features

- CPU redundancy (1+1)
- E1 redundancy (1+1) and E1 card redundancy
- Power redundancy (1+1) [2AC, 2DC, AC+DC]
- DCE hot swappable card types
  - 4ch V.35 (nx64K)
  - 4ch G.703 64K co-directional /contra-directional / center mode
  - 2ch Ethernet bridge
  - 6ch RS232
  - 6ch FXS voice
  - 6ch FXO voice
  - 6ch E&M voice
- Drop & Insert function
- Console, NMP,SNMP, management

Connectors

Console port (RJ45, RS232C)

WAN port RJ45 Jack (2-wire, 4-wire).

Physical Specifications

Dimensions: 350 x 438 x 176mm (W x D x H)

Weight: 8kg (chassis+dual power+8 I/O cards) 450g per card

Power Characteristics

AC : AC 90 ~250VAC

DC : DC -48VDC

Environmental Specifications

Operating 0°C to 60°C

Storage 0°C to 70°C

Relative humidity 0% to 90% non-condensing

Predicted MTBF : 65,000 hrs (25°C)

Certification

CE

1+1 Redundant

The ERM-MUX/PLUS supports complete redundant functions for the electrical input service, the power module cards, CPU card and E1 card. The E1 backup provides 1+1 modes. All of these cards are capable of automatic switchover in case of failure. The system has complete warning and diagnostic functions for stable and reliable operation.

Network Management

The ERM-MUX/PLUS supports SNMP (Under development) and/or NMP GUI network management with local PC or via a dedicated timeslot from the E1 line. The NMP GUI can manage more ERM-MUX/PLUS equipment via the E1 network in-line or in nested structures. A console terminal mode is supported as well. When SNMP management mode is available and selected, remote Telnet and HTTP embedded web server are also available for management.

Cascade

RS-485 interface is used for cascading expansion rack, and are provided by RJ-45 x 2 connectors. DB62 connector for connecting backplane data to expansion rack.

Power Redundancy

Power supply options for 110V AC, 220V AC or -48V DC, ensure maximum flexibility for central office installations. This equipment complies fully with all ITU-T standards for E1 transmissions. The modules are hot-swappable, capable of automatic switch over in case of module failure, stable, and reliable.

Performance and BERT test

System supports performance monitoring and BERT test through NMP or Terminal console according RFC 1406 recommendation. CRC-4 and BPV monitoring: CURR ES / UAS , LONG ES / UAS. Loopback test and BERT test: display Rx error amounts, Error counts and Bit-error-rate. Test patterns: 2e9-1, 2e11-1 and 2e15-1. Error Insertions and rates: Single, 10e-1, 10e-2, 10e-3, 10e-4, 10e-5, 10e-6, 10e-7.

Ordering Information

ERM-Mux-Plus- □□□□□ Power type

- AA-CH : chassis for AC+AC power
- DD-CH : chassis for DC+DC power
- AD-CH : chassis for AC+DC power
- AC : 90~250VAC power card
- ACV : 90~250VAC power card with voice support
- DC : -36 ~ -72VDC
- DCV :-36 ~ -72VDC with voice support

Example: ERM-Mux-Plus-AA-CH

ERM-Mux-Plus- □□□□□ Optional card

- 2E1R : 2ch E1RJ45 card
- 4E1R : 4ch E1RJ45 card
- 8E1R : 8ch E1RJ45 card
- 2E1B : 2ch E1BNC card
- 4E1B : 4ch E1BNC card
- 8E1B : 8ch E1BNC card
- CPU : CPU card
- SNMP : SNMP card
- FXO : 6ch FXO card
- FXS : 6ch FXS card
- E&M : 6ch 2/4 wire E&M card
- RS232 : 6ch RS232 card
- G64K : 4ch G703 64k card
- Data : 4ch V35/X21/RS449/RS530 card
- RS485 : 6ch RS485/422 card
- ET100 : 2ch 10/100Base-TX card

Example: ERM-Mux-Plus-2E1R

4U, 10 I/O Slot Data, Ethernet, Voice E1 Managed Multiplexer

ERM-Mux/Plus

Application

Connection with PBX (Program Controlled Exchanger)

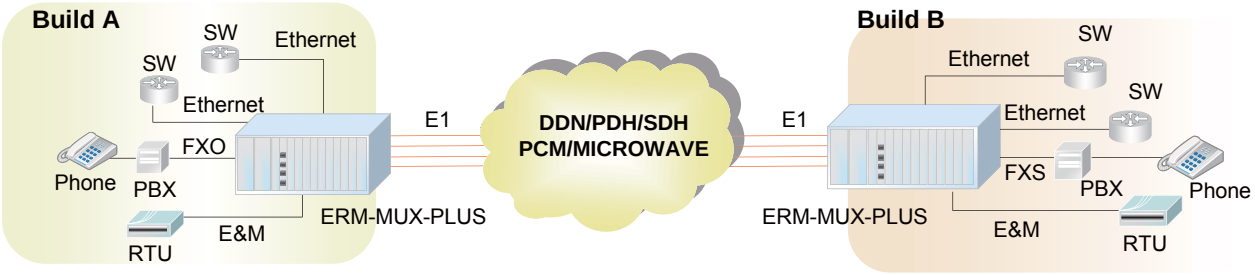

Data connection among multiple points

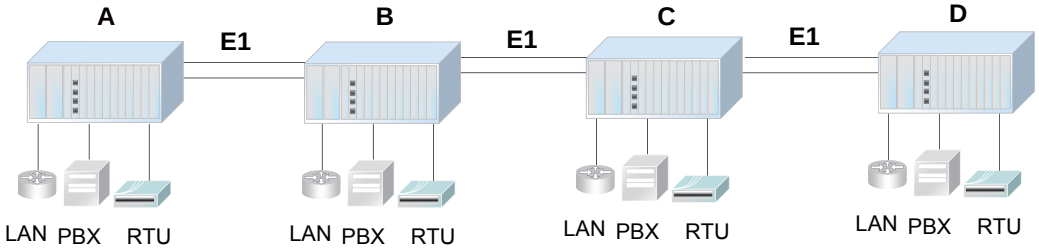

The extension and expansion of DDN (Data Distribution Network)

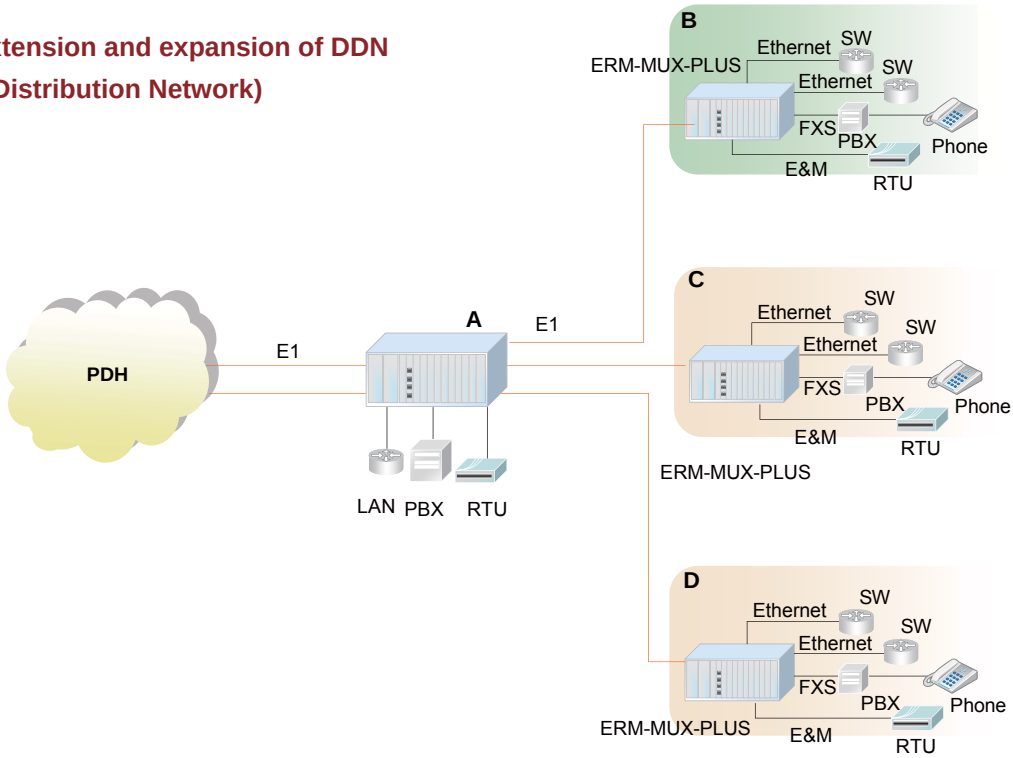

G.703 E1 Aggregate Card

ERM-Mux/Plus-E1

The ERM-Mux/plus has two dedicated slots for installing E1 aggregate cards. Currently E1 cards are available with 2, 4 or 8E1 ports. In the backplane design of the ERM-Mux/plus, a maximum of 4 E1s can carry data to and from tributary (I/O) cards. One typical application could be to install two 4E1 cards in the chassis and have the cards act as one master and one hot-standby card for E1 redundancy. For other applications, an 8E1 card could be used to cross connect E1 timelots prior to assignment to the four available backplane channels. Another application can use the 'extra' E1 aggregate channels for drop & insert (Sub-E1) rather than performing cross connection. It can quickly be seen that a large number of applications are possible with the ERM-Mux/plus's flexible design.

Features

- Available in 2, 4 or 8 E1 channels
- Supports PCM31 or PCM30 framing
- Can provide path/card redundancy
- E1 timeslots can support cross-connect function
- E1 channel can act as Sub-E1 for Drop&Insert
- Hot Swappable

Specifications

Frame format	: CAS(PCM30)/CCS(PCM31)
CRC on/off	
Bit rate	: 2.048Mbps
Line codes	: HDB3/AMI
Rx sensitivity	: 0 ~ -43dB
Tx driver	: 1.5km over 0.5mm E1 cable
Line impedance	: 75 ohms (unbalanced) 120 ohms (balanced)
Pulse amplitude	: nominal 2.37V (75ohm) nominal 3.00V (120ohm)
Pulse shape	: According to ITU-T G.703
Temperature	: 0°C ~ 50°C
Humidity	: 5~95%
MTFB	: 65,000 hrs

ERM-Mux/Plus Application

Data, Ethernet, Voice, E1 MUX Solution

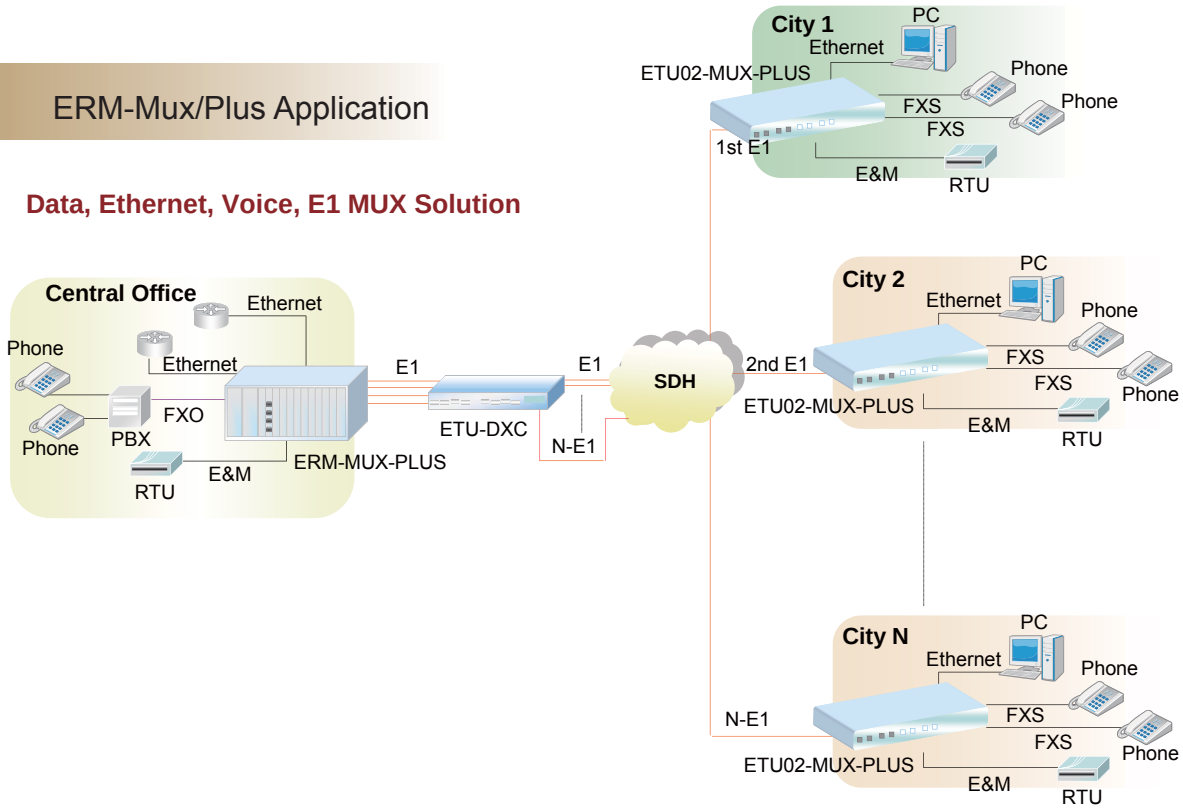

Fast Ethernet Bridge Tributary Card

ERM-Mux/Plus-ET100

The ERM-Mux/plus Ethernet Bridge Tributary Card provides Ethernet over E1 capability. Incorporating two separate channels, this transparent bridge supports industry standard HDLC encapsulation. The WAN data rate depends on the number of E1 timeslots assigned (Nx64). The front panel has two RJ-45 shielded connectors for connection of 10Base-T or 100Base-TX Ethernet and status LEDs for each channel to display link state, speed, duplex and activity. Rounding out each bridge channel are support for 256 MAC filter address learning table and 340 packets buffer to aid in handling LAN side burst traffic.

Features

- Two independent Ethernet over E1 channels
- Utilizes HDLC WAN encapsulation
- MAC Address learning table with 5 minute aging
- Auto-MDIX and Auto-Negotiation
- Hot Swappable

Specifications

Standards : IEEE 802.3, IEEE802.3u
Automatic address learning, aging and deletion after 5 min.
Throughput latency : 1 frame
MDI / MDIX : Auto
Filtering : 256 MAC address table
Buffer : 340 packets
Encapsulation : HDLC
10Base-T/100Base-TX, Full or half duplex
Packet sizes : 64 bytes to 1522 bytes
Temperature : 0°C ~ 50°C
Humidity : 5-95% (non-condensing)
MTFB : 65,000 hrs

Nx64 Synchronous Serial Tributary Card

ERM-Mux/Plus-Data

The ERM-Mux/plus Nx64 Serial Tributary Card provides V.35/ X.21/ RS-530/ RS-449 Synchronous data capability. Incorporating four separate channels, each channel can independently assign any Nx64 timeslots from the aggregate E1. The single HD68 connector mates to a 1 to 4 cable that terminates to the required connector type. Four different cables provide connection to V.35's MB34, X.21's DB15, RS-530's DB25 or RS-449's DB37 female connectors. Please be sure to select the right cable for your application when ordering this card.

Features

- Four independent Synchronous channels
- Nx64 setting from any E1 channel
- Each channel operates in native DCE mode
- Diagnostic loop backs
- LED indicators for Power, Alarm, RD/TD activity
- Hot Swappable

Specifications

ITU-T and ANSI compliant Datacom interfaces
Multiplexing Nx64K data onto E1 time-slot.
Data speed : Nx64K(N=1 to 30, or 31).
Data access : RS-530, RS-449, V.35, X.21, supplied with corresponding interface cable.
Access mode : DCE
Diagnostics : Local /Remote /Bi-directional Loop
Temperature : 0°C ~ 50°C
Humidity : 5~95%
MTFB : 65,000 hrs

Asynchronous RS-485/442 Serial Tributary Card

ERM-Mux/Plus-RS485

The ERM-Mux/plus Asynchronous RS485/422 Serial Tributary Card provides six independent RS-485/ RS-422 data channel capability. Incorporating six separate channels, each channel can independently assign any Nx64 timeslots from the aggregate E1. Each channel uses a pluggable 4-pin terminal block for connection one or two twisted pair wires. No cables are provided with this card. When connecting to RS-485, the channel supports 4-wire Full Duplex or 2-wire Half Duplex RS-485 transmissions for serial control or data acquisition.

Features

- Six independent channels
- Nx64 setting from any E1 channel
- Transparent asynchronous rates up to 128kbps
- Diagnostic loop backs
- Hot Swappable

Specifications

Interface	: RS422 4 wire, RS485 4/2 wire
LEDs	: RS485/422 TD/RD, Power, Alarm
Baud rate	: Async mode <= 128K
Bit Error Rate	: Less than 10^{-10}
Connector	: 4pin Terminal Block x 6
Duplex	: Full / Half
Temperature	: 0°C ~ 50°C
Humidity	: 5~95%
MTFB	: 65,000 hrs

RS232 Sync/Asyn Tributary Card

ERM-Mux/Plus-RS232

The ERM-Mux/plus Sync/Async RS232 Serial Tributary Card provides six independent RS-232 data channel capability. Incorporating six separate channels, each channel can independently assign any Nx64 timeslots from the aggregate E1. The single DB62 connector mates to a 1 to 6 cable that terminates to DB25 female connectors. These serial data channels may be linked to leased line modems for further extension or connected to other data terminal or data acquisition devices. When configured for synchronous use, the data connectors carry both clock and data. For asynchronous use, the clock signals can be ignored.

Features

- Six independent channels
- Nx64 setting from any E1 channel
- Transparent asynchronous rates up to 115.2kbps
- Synchronous 64 or 128Kbps, DCE mode
- Diagnostic loop backs
- LED indicators for Power, Alarm, RD/TD activity
- Hot Swappable

Specifications

ITU-T V.24 compliant Datacom interfaces

Multiplexing Nx64K data onto E1 time-slot.

Data speed	: Nx64K(N=1 to 2).
Data access	: RS-232, supplied with corresponding interface cable.
Access mode	: DCE
Diagnostics	: Local /Remote /Bi-directional Loop
Temperature	: 0°C ~ 50°C
Humidity	: 5~95%
MTFB	: 65,000 hrs

G.703 64K Co-directional Tributary Card

ERM-Mux/Plus-G64K

The ERM-Mux/plus G64K Tributary Card provides six independent G.703 64Kbps Co-directional data channel capability. Each channel can independently assign any 64Kbps timeslot from the aggregate E1. Individual Shielded RJ-45 connectors that conform to USOC RJ-48C standard wiring provide the G.703 connections. Standard UTP or alternately shielded UTP are both acceptable cabling media. These data channels may be linked to multiplexers, terminal equipment or satellite/micro-wave transmission equipment. In Co-directional signaling, the clock signals are recovered from the received G.703 data stream. Only Tx and Rx pairs or a total of 4 wires are required in 64Kbps co-directional transmission.

Features

- Six independent channels
- 1x64 setting from any E1 channel
- Transparent synchronous rate of 64kbps
- Co-directional clock recovered from Rx G.703
- Diagnostic loop backs
- LED indicators for Power, Alarm, Tx/Rx activity
- Hot Swappable

Specifications

ITU-T G.703, G.823 64kbps compliant interfaces

Multiplexing 1x64K data onto E1 time-slot.

Data speed	: 64Kbps +/-100ppm.
Data access	: RJ-45 per USOC RJ-48C standard
Line code	: Co-directional
Pulse shape	: according to G.703
Transmit distance	: 600M or less (0.5~0.7mm TP)
Diagnostics	: Local /Remote /Bi-directional Loop
Temperature	: 0°C ~ 50°C
Humidity	: 5~95%
MTFB	: 65,000 hrs

E&M Voice Tributary Card

ERM-Mux/Plus-E&M

The ERM-Mux/plus E&M Voice Tributary Card provides six independent Ear & Mouth Voice channel capability. Each channel can independently assign any 64Kbps timeslot from the aggregate E1. Individual Shielded RJ-45 connectors provide the voice connections. Standard UTP or alternately shielded UTP are both acceptable cabling media. These voice channels may be linked to PBX (Private Branch Exchange) to facilitate voice to voice connections. The channels support selection of Type 1~5, support 2 or 4 wire operation and have 0.5dB steps for signal attenuation. When using this card, an appropriate voice compatible power module must be used in the ERM-MUX/Plus.

Features

- Six independent channels
- 2/4 wire independent setting
- 1x64 setting from any E1 channel
- E&M Signaling PBX trunks
- Provides E line, M line, SB (battery) and SG (ground) lines
- G.711 Codec
- LED indicators for Power, Alarm, activity
- Hot Swappable

Specifications

Loop current	: 5~30 mA, maximum 70 mA.
Return loss	: 300-600Hz >12dB (2W)
	600-3400Hz >15dB (2W)
	300-3400Hz >20dB (4W)
Group delay	: @-10dBm0 <750uSec(2W) <600uSec(4W)
Total Distortion	: according to ITU-T G.223
Channel crosstalk	: < -65dB, 1020Hz@0dBm0
Noise	: <-65dBm0p weighted
Temperature	: 0°C ~ 50°C
Humidity	: 5~95%
MTFB	: 65,000 hrs

FXO Voice Tributary Card

ERM-Mux/Plus-FXO

The ERM-Mux/plus FXO Voice Tributary Card provides six independent Foreign Exchange Office Voice channel capability. Each channel can independently assign any 64Kbps timeslot from the aggregate E1. Individual Shielded RJ-45 connectors provide the voice connections. Standard UTP or alternately shielded UTP are both acceptable cabling media. These voice channels may be linked to PBX (Private Branch Exchange) or PSTN (Public Switched Telephone Network) to facilitate voice to voice connections. When using this card, an appropriate voice compatible power module must be used in the ERM-Mux/plus.

Features

- Six independent channels
- 2 wire
- G.711 Codec
- 1x64 setting from any E1 channel
- PCM30 R2 Signaling PSTN trunks
- Links PBX to PBX or extends POTS
- LED indicators for Power, Alarm, activity
- Hot Swappable

Specifications

On-hook DC resistance	: >100K Ohms
Ring AC resistance	: >7.5K Ohms
Ring power sensitivity	: <50mW
Off-hook DC resistance	: <300 Ohms
Max. Input Voltage	: 70VDC
Max. Input Current	: 150mA
Return loss	: 300-600Hz >12dB (2W)
	600-3400Hz >15dB (2W)
	300-3400Hz >20dB (4W)
Channel crosstalk	: < -65dB, 1020Hz@0dBm0
Noise	: <-65dBm0p weighted
Temperature	: 0°C ~ 50°C
Humidity	: 5~95%
MTFB	: 65,000 hrs

FXS Voice Tributary Card

ERM-Mux/Plus-FXS

The ERM-Mux/plus FXS Voice Tributary Card provides six independent Foreign Exchange Station Voice channel capability. These 6 channel tributary cards are designed for voice applications over E1. Typically, an FXS connects to a standard telephone set. The FXS needs to sense on-hook, off-hook or disconnected status. It also must be able to provide ring function to a telephone set and it must pass caller-ID information. In the ERM-Mux/plus point-to-point application, the FXS can connect to a remote FXO (Foreign Exchange Office) when deployed as an extension from PBX (Private Branch Exchange) or PSTN (Public Switched Telephone Network). It may also connect to a remote FXS, also for extension from PBX or as a direct 'hotline' voice connection. Individual Shielded RJ-45 connectors provide the voice connections. When using this card, an appropriate voice compatible power module must be used in the ERM-Mux/plus.

Features

- Six independent channels
- 2 wire
- G.711 Codec
- 1x64 setting from any E1 channel
- Provides ring function
- Supports caller-ID forwarding
- PSTN extension or direct "Hot-line"
- Links PBX to PBX or extends POTS
- LED indicators for Power, Alarm, activity
- Hot Swappable

Specifications

Effective ring voltage	: AC 75VRMS +/-15V@25Hz +/-3Hz, <10% THD
	Ring voltage at 300mA load : >50VACRMS
Loop resistance	: <1.8K Ohms, including 300 Ohms for telephone
On-hook current	: 10mA +/-3mA.
Off-hook loop current	: 18-50mA.
Surge protection	: 1000V, 10uSec transient response, decay to 50% in 700uSec
	300VRMS for less than 200mSec; no component damage
	220VRMS for 15 minutes; damage only local loop
Channel crosstalk	: < -65dB, 1020Hz@0dBm0
Noise	: <-65dBm0p weighted
Temperature	: 0°C ~ 50°C
Humidity	: 5~95%
MTFB	: 65,000 hrs

1U, 3 I/O Slot Data, Ethernet, Voice E1 Managed Multiplexer

ETU02-MUX-Plus

Features

- 1U 19" 3-slot chassis
- Provides 3 slots, removable interfaces: V35, X21, RS530, RS449, RS232, G.703 Co-directional, Ethernet Bridge, FXO, FXS and E&M
- Optional drop and insert E1 port (Sub E1)
- Setup and Control via RS-232 terminal
  Multiple clock source selection
  (Internal or External: E1 recovery, DTE or DCE)
  Optional SNMP management

Ethernet bridge

- 2 independent channels , Ethernet bridge interface
  10/100Base-TX bridge
  Auto-Negotiation
  Auto MDI/MDIX
  Forward 1522 bytes (Max.) packets
  Supports IEEE 802.1q Tag VLAN pass thru
  Support flow control (Pause)
- Standard IEEE 802.3/802.3u
- Connector RJ-45 x 2
  10/100Base-TX, Auto-negotiation
- Frames Supports 64-1522 bytes packet length
- WAN protocol Synchronous HDLC
- WAN rate N*64Kbps, up to 2048Kbps

Specifications

LAN Specifications

- **Standard** Fully compliant with IEEE 802.3/802.3u
- **Connector** RJ-45x2
- **Speed** 10Base-T/100Base-TX, Full or half duplex
- **Frames** Supports 64 to 1522 byte packet lengths standard and extended length frames for VLAN tagging, etc.

WAN Specifications

- **Protocol** Synchronous HDLC
- **Rates** N*64 or N*56Kbps, up to 2048Kbps

The ETU02-MUX/PLUS is a 1U 19(23)" 3 slot rack type E1 Time Division Multiplexer for Fractional E1 network access which provides an economic solution for central site or remote installations. There are 3 slots available for hot-swappable ETU02-MUX/PLUS-I/O cards. One slot is provided for MUX-E1 card, which provides either single E1 main link or main E1 link plus a drop and insert sub-E1 port. The MUX-E1 card may be linked to another ETU02-MUX/PLUS or ERM-MUX/PLUS Rack to provide a point-to-point variety of datacom, Ethernet & voice over E1 network services. The ETU02-MUX/PLUS optionally accommodates up to two separate power supplies, which may derive power from AC (110/220) or DC (-48V) power sources. When two power supplies are installed, the modules provide complete power redundancy and are hot swappable even during the E1 cards' transmission. The ETU02-MUX/PLUS provides BNC and RJ-45 for E1 Line interface connections, RJ-45 connections are used for all voice (FXO, FXS, E&M), for 10/100 Ethernet Bridge and G.703/64K Co-directional. Optional cable adapters are used to convert the DB-62F DCE ports of the I/O cards to 4xRS-232 or HP68F DCE ports of I/O card to 2x V.35, RS-530, RS-449, RS-422 and X.21 channels.

Indications	Power, Signal loss, Sync loss, Alarm (AIS, MRAI, RAI), TD, RD, Error, Test
Standard	ITU-T G.703/G.704/G.706 & G.732, G823
Power	AC: 90 ~250V
Power Consumption	20W
Dimensions	235 x 438 x 45mm (D x W x H)
Weight	2.9kg
Temperature	0~50°C (Operating) ,-10~70°C (Storage)
Humidity	10~90% non-condensing
MTBF	57,000 hrs (25°C)

X.50 card

Specifications

- **Interface types** RS232
- **Connector** DB62F with cable adapter
- **Line code** NRZ
- **Data rate** 2.4K ~ 19.2kpbs x 5Ch
- **Loopback type** Local/Remote loopback

Ordering Information

ETU02-MUX-Plus- □□□□□ Power type

AC : 90~250VAC chassis
DC : -36 ~ -72VDC chassis

Example: ETU02-MUX-PLus-AC

ETU02-MUX-Plus- □□□□□ Optional card

E1 : E1 BNC card
Sub E1 : E1+ sub E1 BNC card
N64 : 2ch V35/X21/RS530 card
RS232 : 4port RS232 card
RS232C : 4port RS232 card w/ Clock
ET100 : 2port 10/100TX card
FXS : 4port FXS card
FXO : 4port FXO card
E&M : 4port E&M card
G64 : 2port G.703 64K card

Example: ETU02-MUX-Plus-E1

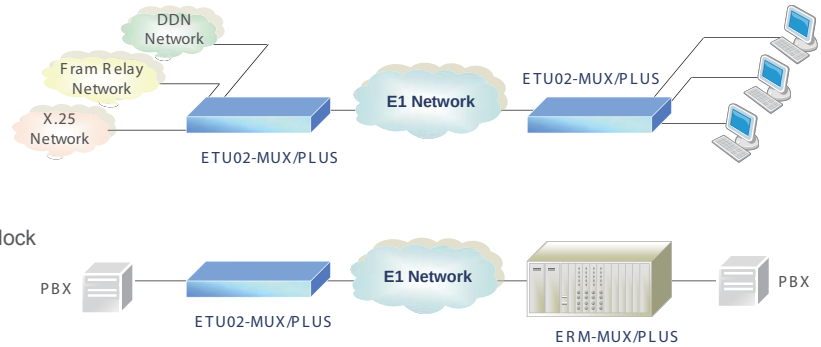

G.703/64K co-directional card

- 2-channels , Co-directional 64K interface
- Interface type: ITU-T G.703/64K
- Connector: RJ-45 x 2
- Line code: Co-directional
- Data rate: 64Kbps ± 100ppm x 2-channels
- Line impedance: 120 ohm (balanced)
- Frame mode: Unframed only

Specifications

- **Interface types** G.703/64K, Co-directional
- **Connector** RJ45 x 2
- **Line code** ITU-T G.703/64K, Co-directional
- **Data rate** 64kpbs±100ppm x 2 channels
- **Line impedance** 120 ohms
- **Frame mode** Unframed only

RS-232 card

- 4-channels
- Interface type: RS-232 (V.24)
- Connector: HD62 female with appropriate cable adapter
- Line code: NRZ
- Data rate: Asynchronous mode <= 38.4Kbps (4-channels),
- Synchronous mode = 19.2/38.4/64/128Kbps

Specifications

- **Interface** RS232
- **Connector** HD62F with cable adapter
- **Line code** NRZ
- **Data rate** 3.84kbps x 4ch or 64/128kbps x 4ch

E&M

- BD/GD wires are for battery and ground detection
- E&M card provides 4 independent channels
- E&M interface provides 1 pair of E and 1 pair of M
- Each E&M can support Type I, II, III, IV or V
- Loop current range is normally 5-30mA, 70mA max
- Timeslot 16 complies with ITU-T G.711
- TX / RX attenuation, and 2 / 4 wire operation

Specifications

- **Input level** 0 to -16dBr, in 0.5dB steps
- **Output level** 0 to -16dBr, in 0.5dB steps
- **Impedance** 600 ohms, option
- **Return loss** 2-wire 300-600Hz: >12dB
  2-wire 600-3400Hz: >15dB
  4-wire 300-3400Hz: >20dB
- **Group delay** 2-wire @ -10dBm: < 750μ second
  4-wire @ -10dBm: < 600μ second
- **Total distortion** According to ITU-T G223
- **Channel cross-talk** Not exceed -65dB, 1020Hz@0dBm
- **Out-of-band Signal attenuation** -25dBm@4.6~72KHz
- **Level not to exceed** -50dBm
- **Noise** <-65dBm
- **Interface connector** RJ-45*4

E1 and Sub E1 module

- Single E1 or 1+1 E1 card (E1 and Sub-E1), provides unbalanced BNC or balanced RJ45 connector
- Each E1 loop provides clock to be used as system clock source

Specifications

- **Connectors** BNC for unbalanced ; RJ-45 for balanced
- **Framing Framed** Unframed / Framed CCS(PCM31) / CAS(PCM30)
- **CRC check** CRC4 on/off
- **Bit rate** 2.048Mbps±0 ppm
- **Line code** AMI / HDB3
- **Line impedance** 75 ohm(BNC) / 120 ohm(DB-15, RJ-45)
- **Relative receive level** 0 to -43dB
- **Transmitter driver reach** 1.5Km
- **Pulse amplitude** Nominal 2.37V ±10% for 75ohm
  Nominal 3.00V ±10% for 120ohm
- **Zero amplitude** ±0.1V
- **Transmit frequency** Internal timing ±30 ppm
- **Tracking** Recovery timing ±50 ppm
- **External** timing±100 ppm
- **Jitter performance** According to ITU-T G.823
- **Compliance** ITU G.703, G.704, G.706, G.732

Nx64 card

- 2-channels , High speed data interface
- Interface type: V35/RS-530/X.21/RS-449
- Connector: HD68 female with appropriate cable adapter
- Line code: NRZ
- Data rate: N*64kbps, where N=1 to 31 in CCS
  N=1 to 30 in CAS

Specifications

- **Interface types** RS530, X.21, V.35, RS449, RS232
- **Connector** HD68F with cable adapter
- **Line code** NRZ
- **Data rate** Nx64kbps

FXS

- Provides 4 independent channels
- Connects to standard telephones

Specifications

- **Connector** RJ45 x 4
- **Impedance** 600 ohms
- **Level Gain** On Tx side 0 dB On Rx side -3.5dB
- **Ring current Output** 75±15V
- **Frequency** 25±3Hz
- **Feeding voltage** -48
- **Loop resistance** 1800 ohms
- **Connecting distance** up to 4km
- **Wire Gauge** 0.4mm
- **Feeding working current** 20mA

FXO

- Provides 4 independent channels
- Connects directly to PSTN

Specifications

- **Connector** RJ-45*4
- **Impedance** 600 ohms
- **Level Gain** On Tx side 0 dB On Rx side -3.5dB
- **Ring current impedance** > 7.5k ohms
- **Direct current resistance** < 300 ohms
- **Maximum direct current borne** > 70V

E1 Mux 4 Data Port sub E1 w/ SNMP

ETU02-MUX

The ETU02-MUX is a 1U 19(23)" 4 slot rack mountable multiplexing solution for Fractional E1 network services. Up to four DTE devices may be linked to this model at data rates of 64Kbps to 2048Kbps. There is also provision for one optional E1 sub-link which will perform drop & insert with user-defined timeslot connections from a PABX or other E1 equipment to E1 network services. The Fractional E1 2 or 4 port multiplexer supports local control and diagnostics via an LCD display and LED status indicators located on the front panel or via a serial console port. These features enable users to easily configure the unit, execute the in-service diagnostics and monitor the network status. The ETU02-MUX provides for optional SNMP Network Management System, which allow the user to remotely control and manage the system via SNMP protocol. This model fully meets all of the E1 specifications including ITU-T G.703, G.704, G.706, G.732, and G.823.

Features

- Provides 4 slots, removable interfaces: V35, X21, RS530, RS449, RS232, G.703 Co-directional, NRZ, Ethernet Bridge and Router.
- Optional drop and insert E1 port (Sub E1)
  Built-in BERT with V.54 diagnostic capabilities for performing local and remote loopback
- Setup and Control via front Panel with LCD display or RS-232 terminal
  Multiple clock source selection (Internal or External: E1 recovery, DTE or DCE)
- Optional SNMP management

E1 and Sub-E1	Framing Unframed / Framed CCS(PCM31)/ Framed CAS(PCM30)
	Bit rate 2.048Mbps±0 ppm
	Line code AMI / HDB3
	Line impedance 75 ohm (BNC) / 120 ohm (DB-15, RJ-45)
Transmitter level	Relative receive level 0 to -43dB
	Pulse amplitude Nominal 2.37V ±10% for 75ohm Nominal 3.00V ±10% for 120ohm
	Zero amplitude ±0.1V
	Transmit frequency Internal timing±100 ppm
	Tracking Recovery timing±100 ppm
	External timing±100 ppm
	Jitter performance According to ITU-T G.823
	Return loss 12dB for 51 ~ 102KHz 18dB for 102 ~ 2048KHz 14dB for 2048 ~ 3072KHz
	Interface connector 15-pin D-type F, BNC
User Data Channel	Data rate Nx56Kbps or Nx64Kbps
	Control signals CTS constantly on DSR constantly on, except during test loops DCD constantly on or follows RTS, except during signal loss
	Loopback Line, Payload, local, DTE loopback
	BERT Test Patterns 511, 2047, 2e15-1, 2e20-1, QRSS, 2e23-1, All 1, All 0, Alt, 0011, 3 in 24 , 1 in 16, 1 in 8,1 in 4 test pattern.
Clock modes	Clock mode 0 (DCE1) Receive and transmit clock (recovered) to the sync DTE
	Clock mode 0 (DCE2) Receive and transmit clock (internal oscillator0 to the sync DTE
	Clock mode 0 (DCE3) Receive and transmit clock from the sync DCE (from ETC and ERC pin)
	Clock mode 0 (DCE4) Receive and transmit clock from the sync DCE (all from ETC pin)
Key Pad	4 operation keys
LCD	16 x 2 character backlit LCD
Indications	Signal loss, Sync loss, Alarm (AIS, MRAI, RAI), TD, RD, Error, Test
Standard	ITU-T G.703/G.704/G.706, G.732 & G823
Power Input	AC: 90 ~250V, DC24: -18 ~-36VDC, DC48: -36 ~-72VDC
Power Consumption	10W
Dimensions	235 x 438 x 45mm (D x W x H)
Weight	2.9kg
Temperature	0~50°C (Operating) ,-10~70°C (Storage)
Humidity	10~90% non-condensing
Certification	CE, FCC, RoHS
MTBF	57,000 hrs (25°C)

Ordering Information

ETU02-MUX-□□□□□ Power type

AC : 100 ~ 240VAC chassis
DC : -18 ~ -72VDC chassis

Example: ETU02-MUX-AC

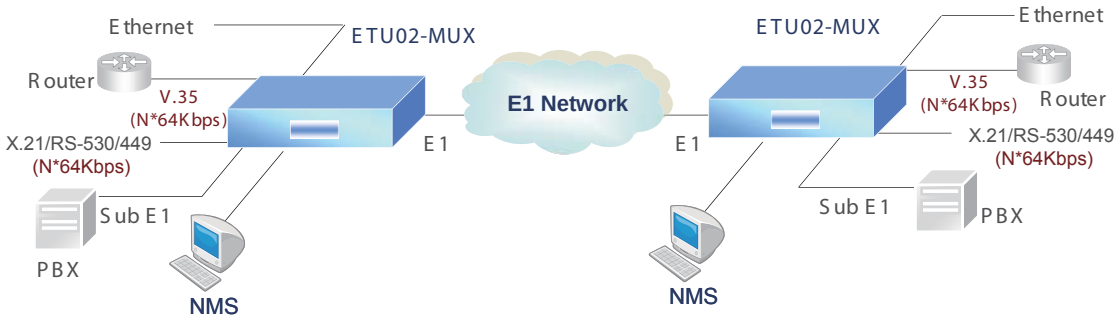

4 port Fractional E1 Access Multiplexer

ETU02A-MUX

The ETU02A-MUX is a 1U 19(23)" 2 or 4 fixed data port rack mountable multiplexing solution for Fractional E1 network services. Up to four DTE devices may be linked to this model at data rates of 64Kbps to 2048Kbps. There is also provision for one optional E1 sub-link which will perform drop & insert with user-defined timeslot connections from a PABX or other E1 equipment to E1 network services. The Fractional E1 2 or 4 port multiplexer supports local control and diagnostics via a serial console port. These features enable users to easily configure the unit, execute the in-service diagnostics and monitor the network status. The ETU02A-MUX provides software configurable fixed data ports in conjunction with adapter cables for V.35, RS-530, X.21, RS-449 or RS-232 This model fully meets all of the E1 specifications including ITU-T G.703, G.704, G.706, G.732, and G.823.

Features

- Provides 4 fixed interfaces: V35, X21, RS530, RS449 and RS232.
- Optional drop and insert E1 port (Sub E1)
- Performing local and remote loopback
- Setup and Control via RS-232 terminal
- Multiple clock source selection
  (Internal or External: E1 recovery, DTE or DCE)

E1 and Sub-E1	Framing Unframed / Framed CCS(PCM31)/ Framed CAS(PCM30)
	Bit rate 2.048Mbps±0 ppm
	Line code AMI / HDB3
	Line impedance 75 ohm (BNC) / 120 ohm (DB-15, RJ-45)
	Relative receive level 0 to -43dB
Transmitter level	Pulse amplitude Nominal 2.37V ±10% for 75ohm Nominal 3.00V ±10% for 120ohm
	Zero amplitude ±0.1V
	Transmit frequency Internal timing±100 ppm
	Tracking Recovery timing±100 ppm
	External timing±100 ppm
	Jitter performance According to ITU-T G.823
	Return loss 12dB for 51 ~ 102KHz 18dB for 102 ~ 2048KHz 14dB for 2048 ~ 3072KHz
	Interface connector 15-pin D-type F, BNC
User Data Channel	Data rate Nx56Kbps or Nx64Kbps
	Control signals CTS constantly on DSR constantly on, except during test loops DCD constantly on or follows RTS, except during signal loss
	Loopback Line, Payload, local, DTE loopback
	BERT Test Patterns 511, 2047, 2e15-1, 2e20-1, QRSS, 2e23-1, All 1, All 0, Alt, 0011, 3 in 24 , 1 in 16, 1 in 8,1 in 4 test pattern.
Clock modes	Clock mode 0 (DCE1) Receive and transmit clock (recovered) to the sync DTE
	Clock mode 0 (DCE2) Receive and transmit clock (internal oscillator0 to the sync DTE
	Clock mode 0 (DCE3) Receive and transmit clock from the sync DCE (from ETC and ERC pin)
	Clock mode 0 (DCE4) Receive and transmit clock from the sync DCE (all from ETC pin)
Key Pad	4 operation keys
LCD	16 x 2 character backlit LCD
Indications	Signal loss, Sync loss, Alarm (AIS, MRAI, RAI), TD, RD, Error, Test
Standard	ITU-T G.703/G.704/G.706, G.732 & G823
Power Input	AC: 90 ~250V, DC24: -18 ~-36VDC, DC48: -36 ~-72VDC
Power Consumption	10W
Dimensions	235 x 438 x 45mm (D x W x H)
Weight	2.9kg
Temperature	0~50°C (Operating) ,-10~70°C (Storage)
Humidity	10~90% non-condensing
Certification	CE, FCC, RoHS
MTBF	57,000 hrs (25°C)

Ordering Information

ETU02A-MUX- □□□□□ Power type

AC : 100 ~ 240VAC chassis
DC : -18 ~ -72VDC chassis

Example: ETU02A-MUX-AC

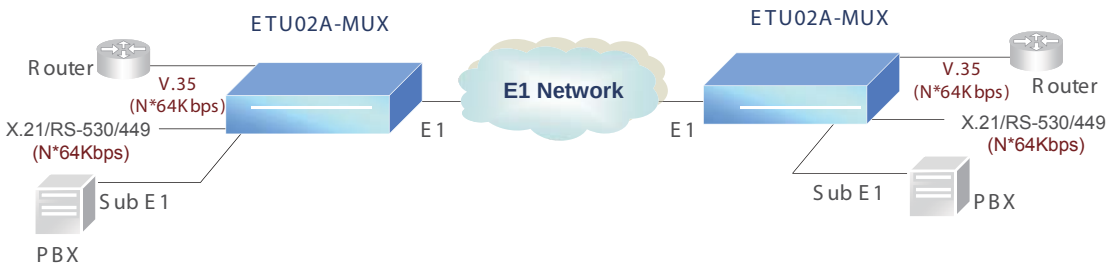

Preliminary

E1 Mux 2x Data Port w/Ethernet bridge on board, option sub E1, console port

ETU02-Mux-E

The ETU02-Mux-E is a 1U half 19" single slot stand-alone or rack mountable multiplexing solution for Fractional E1 network services. Two DTE device plus Bridged Ethernet may be linked to this model at data rates of 64Kbps to 2048Kbps. There is also provision for one E1 sub-link which will perform drop & insert with user-defined timeslot connections from a PABX or other E1 equipment to E1 network services. This fractional E1 multiplexer supports local control and LED status indicators located on the front panel or via a serial console port. These features enable users to easily configure the unit, execute the in-service diagnostics and monitor the network status. The ETU02-Mux-E provides SNMP Network Management System, which allow the user to remotely control and manage the system via SNMP protocol. This model fully meets all of the E1 specifications including ITU-T G.703, G.704, G.706, G.732, and G.823.

Features

- Provides 2 slot, removable interfaces: V35, X21, RS530, RS449, RS232, G.703 Co-directional and NRZ
- Ethernet bridge on board
- Drop and insert E1 port (option Sub E1)
- Built-in BERT with V.54 diagnostic capabilities for performing local and remote loopback
- Setup and Control via RS-232 terminal
- Multiple clock source selection (Internal or External: E1 recovery, DTE or DCE)
- SNMP management

Ordering Information

ETU02A-Mux-E

E1 and Sub-E1	Framing	Unframed / Framed CCS(PCM31)/ CAS(PCM30)
	Bit rate	2.048Mbps±0 ppm
	Line code	AMI / HDB3
	Line impedance	75 ohm (BNC) / 120 ohm (DB-15, RJ-45)
Transmitter level	Relative receive level	0 to -43dB
	Pulse amplitude	Nominal 2.37V ±10% for 75ohm Nominal 3.00V ±10% for 120ohm
	Zero amplitude	±0.1V
	Transmit frequency	Internal timing±100 ppm
	Tracking	Recovery timing±100 ppm
	External timing	±100 ppm
	Jitter performance	According to ITU-T G.823
	Return loss	12dB for 51 ~ 102KHz 18dB for 102 ~ 2048KHz 14dB for 2048 ~ 3072KHz
	Interface connector	15-pin D-type F, BNC
User Data Channel	Data rate	Nx56Kbps or Nx64Kbps
	Control signals	CTS constantly on DSR constantly on, except during test loops DCD constantly on or follows RTS, except during signal loss
	Loopback	Line, Payload, local, DTE loopback
	BERT Test Patterns	511, 2047, 2e15-1, 2e20-1, QRSS, 2e23-1, All 1, All 0, Alt, 0011, 3 in 24 , 1 in 16, 1 in 8,1 in 4 test pattern.
Clock modes		Clock mode 0 (DCE1) Receive and transmit clock (recovered) to the sync DTE Clock mode 0 (DCE2) Receive and transmit clock (internal oscillator0 to the sync DTE Clock mode 0 (DCE3) Receive and transmit clock from the sync DCE (from ETC and ERC pin) Clock mode 0 (DCE4) Receive and transmit clock from the sync DCE (all from ETC pin)
Ethernet Specifications	Connector	RJ-45 x port
	Data Rate	10/100Mbps; Ethernet bridge
Indications		Signal loss, Sync loss, Alarm (AIS, MRAI, RAI), TD, RD, Error, Test
Standard		ITU-T G.703/G.704/G.706, G.732 & G823
Power Input		AC: 100 ~240VAC, DC: 24VDC, 48VDC, 72VDC
Power Consumption		20W
Dimensions		250 x 195 x 45mm (D x W x H)
Weight		1.6kg
Temperature		0~50°C (Operating) ,-10~70°C (Storage)
Humidity		10~90% non-condensing
Certification		CE, FCC, RoHS
MTBF		57,000 hrs (25°C)

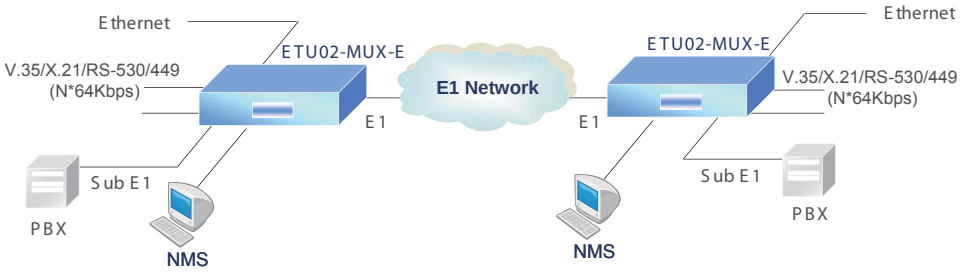

1U, 4 Modular Data Port T1 Multiplexer w/ LCD

TTU02-Mux

The TTU02-Mux is a 1U 19(23)" 4 slot rack mountable multiplexing solution for Fractional T1 (DS1) network services. Up to four DTE devices may be linked to this model at data rates of 64Kbps to 1544Kbps. There is also provision for one optional T1 sub-link which will perform drop & insert with user-defined timeslot connections from a PABX or other T1 (DS1) equipment to T1 network services. The Fractional T1 2 or 4 port multiplexer supports local control and diagnostics via an LCD display and LED status indicators located on the front panel or via a serial console port. These features enable users to easily configure the unit, execute the in-service diagnostics and monitor the network status. This model fully meets all of the T1 specifications including ITU-T G.703, G.704, G.706, G.733, and G.824.

Features

- Provides 4 slots, removable interfaces: V35, X21, RS530, RS449, RS232, NRZ, Ethernet Bridge and Router.
- Optional drop and insert T1 port (Sub T1)
- Performing local and remote loopback
- Setup and Control via front Panel with LCD display or RS-232 terminal
- Multiple clock source selection (Internal or External: T1 recovery, DTE or DCE)

Interface	T1 , Sub-T1 Interface Frame format: SF (D4), ESF Bit rate: 1.544Mbps Line Code: B8ZS / AMI Line impedance: 100 ohms Receiving level: 0 to -36dB Pulse amplitude: Nominal 3.0V ±10% Zero amplitude: ±0.1V Transmit frequency tracking :Internal timing±30 ppm Loopback timing±50 ppm, External timing±100 ppm Jitter Performance: According to ITU-T G.824 Connector: 15 Pin D type female , RJ-45 Data Interface Interface types: RS530, RS449, RS232, X.21,V.35, NRZ, G64K, 10/100Base-T Ethernet Bridge & Router Line code: NRZ (except bridge) Data Rate: 1.544Mbps (Unframed/framed) Nx56kbps or Nx64Kbps Time slot allocation: user defined
Key Pad	4 operation keys
LCD	16 x 2 character backlit LCD
Indications	Power, TD, RD, Error, Test, Signal loss, Sync loss, Alarm LED: Sync Loss, Signal Loss, Alarm (AIS, MRAI, RAI), TD, RD, Error, Test.
Standard	ITU-T G.703, G.704, G.706,G.733, ANSI T1.403, AT&T TR-62411
Power Input	AC: 100~240VAC DC24: -18~-36VDC, DC48: -36~-76VDC
Power Consumption	10W
Dimensions	235 x 430 x 45mm (D x W x H)
Weight	2.8kg
Temperature	0~50°C (Operating) ,-10~70°C (Storage)
Humidity	10~90% non-condensing
Certification	CE, FCC, RoHS
MTBF	57,000 hrs (25°C)

Ordering Information

TTU02-Mux- □□□□□ Power type

AC : 100 ~ 240VAC chassis
DC : -18 ~ -72VDC chassis

Example: TTU02-MUX-AC

2U, 20-Slot, E1 Inverse MUX Concentrator

ERM04A

The ERM04A is a 2U high 19" Rack, 20 slot modular media converter rack. It provides an economic solution in high density fiber converter installations in enterprises or central offices. All critical components, Power, fans, management module and interface cards are hot swappable, allowing online field replacement. The hot-swappable power modules can be chosen from AC100-240V, DC18-36. or DC 36-75V. The chassis also has a pair of alarm relays and is able to stack up to 10 chassis as one management IP address. A number of cards are available that support different protocols including Ethernet, Voice, Data, transponders, FOM and IMUX.

Connectors

Console RS232(DB9)

LAN 10/100 Base TX RJ45

Physical Specifications

Dimensions: 303mm x 438mm x 88mm (W x D x H)

Weight: 5.2kg w/o P/S

Power Characteristics

AC : 100 ~ 240VAC

DC24 : 18 ~ 36VDC, DC48: 36 ~ 75VDC

Environmental Specifications

Operating 0°C ~ 50°C

Storage -10°C ~ 70°C

Relative humidity 5% ~ 90% non-condensing

Predicted MTBF : 65,000 hrs

Certification

FCC class A, VCCI class A, CE, RoHS

20-slot Multi-service Platform

NMC Card

Technologies Supported:

E1 Inverse Multiplexer

- 10G, 2.7G 3R Transponder
- Gigabit Ethernet Converter
- Fast Ethernet Converter
- Fiber Multiplexer
- POTS Fiber Converter
- Fiber Repeater
- E1/T1 Fiber Modem
- V35/X21/RS530 Fiber Modem
- Serial RS485/422 Fiber Converter

Thermal fan Holes

Chassis backplane consists of passive components

Chassis cascade
up to 10 with one IP management

Hot swappable
Thermal fans

Alarm relay

Single or optional redundant power supplies

Power Redundancy

All the ERM04A chassis power supplies are hot swappable and modular, installing two into a chassis provides redundancy should a single power supply fail. A fully loaded chassis can run continuously with only one power module fitted into the chassis.

Cooling Fan

To further increase system reliability, the ERM04A chassis is fitted with two hot swappable fan modules. Both fan modules can be easily removed from the rear of the chassis, without interruption to the operation of the line cards. A fully loaded chassis can run continuously with only one fan module fitted into the chassis.

Chassis cascade

The ERM04A features cascadeable management which allows managing a stack (up to 10 chassis) from a single IP address. Chassis are interconnected with standard UTP cables that carry control signals. Each chassis has its own ID, starting with the master chassis ID0 and cascading up to ID9.

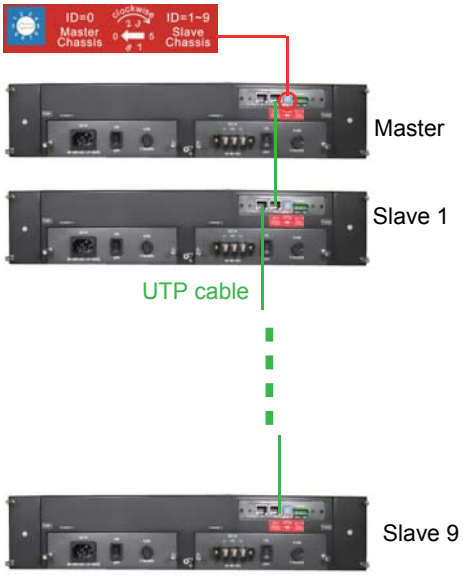

10 chassis cascade with one IP management

Network Management

The ERM04A chassis provides an NMC (Network Management Controller) card which must be installed into the first slot of chassis. The NMC card allows a network administrator with the ability to configure and monitor the status of the blades.

Management can be achieved locally over RS232, or over the network by Telnet, Web or SNMP If the blades support Ethernet in the First Mile (IEEE 802.3ah), then the management module can also configure and monitor the status of a remote blade.

Protocol Supported

The ERM04A chassis has been designed as a Multi-serivce platform. This allows network administrators to deploy the chassis in a wide range of network. Technologies supported by the chassis included Fast/Gigabit Ethernet, E1/T1, V35/X21/RS530, Serial RS485/422, Voice FXO/FXS, Repeater, Fiber Multiplexer, E1 Inverse Multiplexer and 10G, 2.7G Transponder.

Ordering Information

ERM04A- □□□□□ Chassis type

CH: 2U 19" 20 slot chassis
AC : 100 ~ 240 AC power card
DC24 : 18 ~ 36 DC power card
DC48 : 36 ~ 72 DC power card

Example: ERM04A-CH

ERM04A- □□□□□ Optional card

E1
5E1
8E1
16E1

Example: ERM04A-5E1

Network Management Controller

ERM04A-SNMP

The ERM04A-SNMP is a Network Management Controller card that can be placed in a compatible ERM04A series chassis to provide network management functions. The management interface supports a local RS-232 serial console or remote TCP/IP management by Telnet, HTTP or SNMP protocols. The card is designed to be hot swapped so that it may be field replaced without affecting any online service of any other rack cards. The card also supports online firmware upgrade from TFTP server, using any user interface.Support for any standard NMS is provided by the included proprietary MIB file.

CTC Union also provides and maintains their own EMS (Element Management System) which is a Java based client/server manager for monitoring and maintaining a large number of network elements over a long period of time.

Features

- Supports local / remote monitor and configuration.
  Supports local / remote online TFTP f/w upgrade
- Fiber transceiver status & info display
- Supports multiple accesses for SNMP management
- Supports Web GUI management, Telnet, Serial console
  Supports console RS-232 port and 10/100Base-T Ethernet port
- Supports SNMP standard MIB II and proprietary MIB
  Supports NTP time synchronization
- Supports 100 entries system log

Electrical Interface	• Console RS232 port • LAN 10/100Base-TX
Management Interface	• Network management: provide all system OAM functions: software updates, and management system interaction through Ethernet port. • Out-band management: supports Web, Telnet and SNMP , EMS management • Configuration Management • Performance Management • Fault Management • Status Monitoring.
Indications	• PWR, Fan, Alarm Act, STK, LAN LNK/SPD
Dimensions	• 155 x 88 x 23mm (DxWxH)
Weight	• 120g
Temperature	• 0 ~ 50oC (Operating) , -10 ~ 60oC (Storage)
Humidity	• 10 ~90% non-condensing
Certification	• CE, FCC, LVD, RoHS
MTBF	• 65,000 hrs (25oC)

Serial Console Management

```
                    ****************************************
                    *** CTC UNION TECHNOLOGIES CO., LTD. ***
                    *** ERM04A SNMP            VER. 1.95 ***
                    ****************************************
This Chassis ID:[00]  Cascaded:[Yes]    Monitored Chassis ID:[00]
Chassis List:[Master]
    #0:[X] #1:[ ] #2:[ ] #3:[ ] #4:[ ] #5:[ ] #6:[ ] #7:[ ] #8:[ ] #9:[ ]
<1>:SLOT #01 > SNM & Chassis        <B>:SLOT #11 > ERM04A-8E1
<2>:SLOT #02 > ERM04A-5E1           <C>:SLOT #12 > ERM04A-8E1
<3>:SLOT #03 > ERM04A-5E1           <D>:SLOT #13 > ERM04A-8E1
<4>:SLOT #04 > ERM04A-5E1           <E>:SLOT #14 > ERM04A-8E1
<5>:SLOT #05 > ERM04A-5E1           <F>:SLOT #15 > ERM04A-16E1
<6>:SLOT #06 > ERM04A-5E1           <G>:SLOT #16 > ERM04A-16E1
<7>:SLOT #07 > ERM04A-5E1           <H>:SLOT #17 > ERM04A-16E1
<8>:SLOT #08 > ERM04A-5E1           <I>:SLOT #18 > ERM04A-16E1
<9>:SLOT #09 > ERM04A-5E1           <J>:SLOT #19 > ERM04A-16E1
<A>:SLOT #10 > ERM04A-5E1           <K>:SLOT #20 > ERM04A-16E1
<->:Monitor Previous Chassis        <+>:Monitor Next Chassis
<L>:SNMP System Configuration Setup
<M>:SNMP Manager Configuration Setup
<P>:Password Setup
<R>:Reboot          <Z>:Logout
Please select an item
```

Web GUI Manager

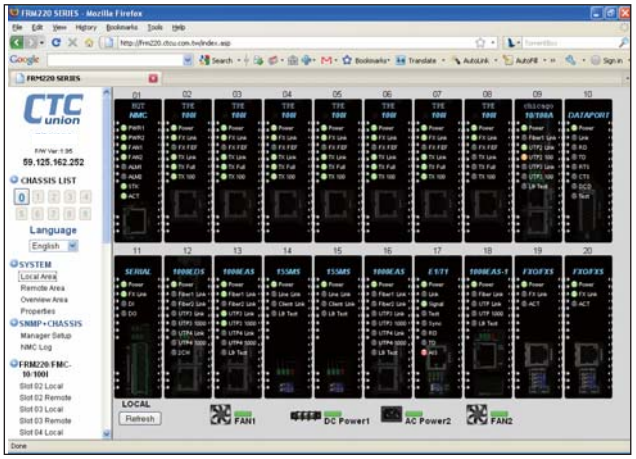

Ordering Information

ERM04A-SNMP : SNMP Card

E1 (2Mbps) Inverse Multiplexer

ERM04A-E1

The ERM04A-E1 slide in card DSU/CSU is a digital access unit for Unframed or Fractional E1 services. The ERM04A-E1 data channel supports user-selectable transmission rates via randomly selected E1 timeslots, which provides integral multiples of 64kbps or 56kbps, up to a maximum 2.048Mbps (unframed), for a line attenuation of up to 43 dB on twisted pair or coax cable. This provides an approximate operating range up to 2km (using 22AWG). The ERM04A-E1 front panel provides status LEDs for monitoring the CSU and DSU conditions for initiating local and remote loopback with integral BERT. The ERM04A-E1 features a Data cable adapter for connection to industry standard routers. When the ERM04A-E1 card is laced in the ERM04A rack with SNMP management, in-band management allows viewing the card and remote converter's status, type, version, link status, data link status and alarms. Both card and remote can be configured to enable or disable the port, reset the port, set the data rate, modify the clock mode and initiate local or far end loop back test.

Features

- Supports Fractional E1 and Unframed E1 services with V.35/X21/RS530 adapter cable
- I/O connectors all located on front panel
- Multiple clock source selection and remote loopback (Internal or External: E1 recovery, DTE or DCE)
- Built-in BERT with V.54 diagnostic capabilities for performing local
- Unbalanced E1/BNC or balanced E1/RJ45
- Fully compatible with ERM04A chassis
- SNMP management with ERM04A chassis
- LED Alarm indication

Interface	Framing	Framed/Unframed
	Standard	ITU-T G.703/G.704/G.706 & G.732, G.823
	Bit rate	2.048Mbps± 50ppm
	Line code	HDB3
	Clock setting	Internal OSC or recovery clock
	Receive level	-43dB
	Line impedance	75 ohm (BNC) / 120 ohm (RJ45)
	Jitter Performance	Complies with ITU-T G.823
	Pulse Mask	Complies with ITU-T G.703
	Pulse amplitude	Nominal 2.37V ± 10%
	Delay Variance	8ms
	Connector	BNC / RJ45
	Diagnostics	Digital remote loopback
	Standard	ITU-T
	Data rate	Nx56 / Nx64
	Connector	HDB26F w/ adapter cable for Data
LEDs		Power, TD, RD, RTS, DCD, TX Clock loss, Signal loss, Sync loss, Alarm, test error
Power		AC adapter : 100~240VAC to 12VDC 100 ~ 240VAC, 18 ~ 75VDC
Power Consumption		< 12W
Dimensions		DC12 : 160 x 88 x 24mm (D x W x H) AC/DC48/AD : 201 x 135 x 35mm (D x W x H)
Weight		DC 12 : 280g, AC/DC48/AD : 580g
Temperature		0 ~ 50°C (Operating), -10 ~ 70 °C (Storage)
Humidity		10 ~ 90% RH (non-condensing)
Certifications		CE, FCC, RoHS
MTBF		7,500 hrs (25°C)

Managed E1 Access Unit

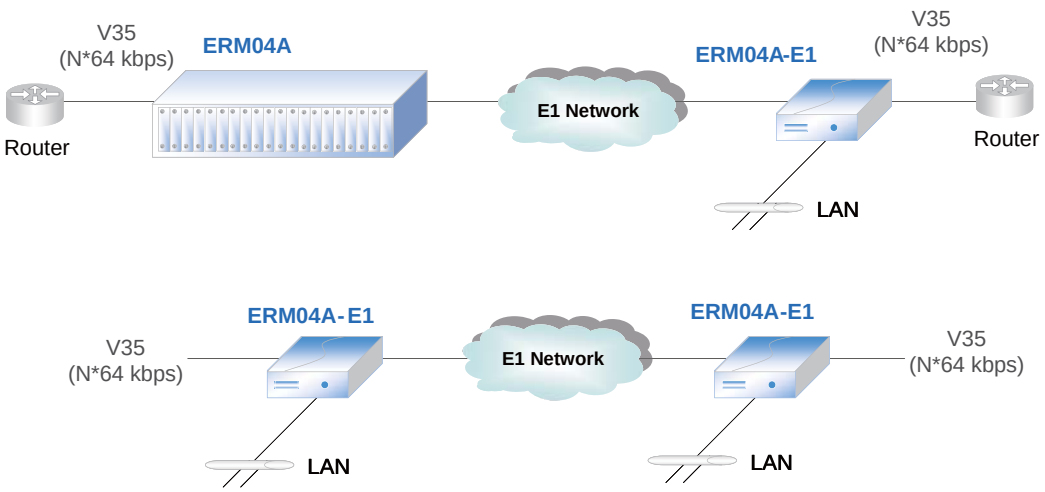

Ordering Information

ERM04A-□□□□□ Optional card

E1

Example: ERM04A-E1

5E1 (10Mbps) Inverse Multiplexer

ERM04A-5E1

The ERM04A-5E1 is a slide-in card E1 inverse multiplexer capable of bundling up to 5 E1 lines for cost-effective connection of 10/100BaseTX or 100Base-FX LANs over multiple E1 transports. The ERM04A-5E1 inverse multiplexer transmits up to a 9.92Mbps Ethernet bridge channel (GFP-F encapsulated) over 5 E1 links. The ERM04A-5E1 bridges the gap between E1 and E3, allowing bridges to operate at faster rates. It also provides high speed access to SDH/SONET backbones where the only access services available are E1 lines. The ERM04A-5E1 supports an E1 attenuation of up to 43 dB on twisted pair or coax cable. This provides an approximate operating range up to 2km (using 22AWG). The ERM04A-5E1 fully meets E1 specifications including ITU-T G.703 and G.823. The ERM04A-5E1 features diagnostic capabilities for performing remote loopback. The operator at either end of the line may test both the ERM04A-5E1 and the line in the digital loopback mode. The Ethernet copper interface supports auto-negotiation and auto MDI/MDIX, allowing plug-and-play Ethernet connection without any additional configuration.

Interface	Framing	CCS+CRC
	Standard	ITU-T G.703/G.704/G.706 & G.732, G.823
	Bit rate	2.048Mbps± 50ppm (up to 5E1)
	Line code	HDB3
	Clock setting	Internal OSC or recovery clock
	Receive level	-43dB
	Line impedance	75 ohm (BNC) / 120 ohm (RJ45)
	Jitter Performance	Complies with ITU-T G.823
	Pulse Mask	Complies with ITU-T G.703
	Pulse amplitude	Nominal 2.37V ± 10%
	Delay Variance	220ms
	Connector	RJ45, BNC
	Diagnostics	Digital remote loopback
	Standard	IEEE 802.3, 802.3u
	Data rate	10/100Base-TX, Half/Full duplex 100Base-FX
	Connector	RJ45 10/100Base-TX SFP-LC 100Base-FX
Indications		Power, ALM,E1 signal loss , E1 Alarm（AIS，LOF， RAI, LOMF), LAN link /ACT, 10/100M , SD(100Base-FX)
Power Input		AC adapter : 100~240VAC to 12VDC 100 ~ 240VAC, 18 ~ 75VDC
Power Consumption		< 12W
Dimensions		DC12 : 160 x 88 x 24mm (D x W x H) AC/DC48/AD : 201 x 135 x 35mm (D x W x H)
Weight		DC 12 : 280g ， AC/DC48/AD : 580g
Temperature		0 ~ 50°C (Operating), -10 ~ 70°C (Storage)
Humidity		10 ~ 90% RH (non-condensing)
Certifications		CE, FCC, RoHS
MTBF		7,500 hrs (25°C)

Features

- Connects one Fast Ethernet over 5E1 links (1.984Mbps to 9.92Mbps)
- Built-in GFP bridge operates at WAN rate
- Auto-Negotiation
- Maximum 220ms delay variance between E1 link
- Unbalanced E1/BNC or balanced E1/RJ45
- Fully compatible with ERM04A chassis
- SNMP management with ERM04A chassis
- LED Alarm indication

Managed E1 Inverse Multiplexer

Delivering point-to-point Fast Ethernet service across E1 or bonded E1 circuits

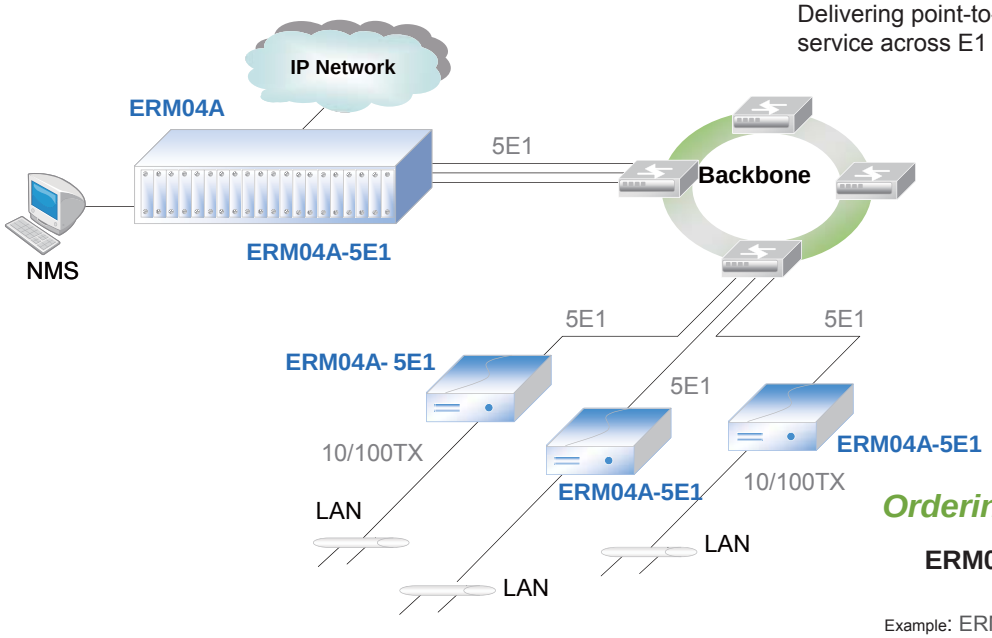

Ordering Information

ERM04A-□□□□□ Optional card

5E1

Example: ERM04A-5E1

8E1 (16Mbps) Inverse Multiplexer

ERM04A-8E1

The ERM04A-8E1 is a slide-in card E1 inverse multiplexer capable of bundling up to 8 E1 lines for cost-effective connection of 10/100BaseTX or 100Base-FX LANs over multiple E1 transports. The ERM04A-8E1 inverse multiplexer transmits up to a 15.87Mbps Ethernet bridge channel (GFP-F encapsulated) over 8 E1 links. The ERM04A-8E1 bridges the gap between E1 and E3, allowing bridges to operate at faster rates. It also provides high speed access to SDH/SONET backbones where the only access services available are E1 lines. The ERM04A-8E1 supports an E1 attenuation of up to 43 dB on twisted pair or coax cable. This provides an approximate operating range up to 2km (using 22AWG). The ERM04A-8E1 fully meets E1 specifications including ITU-T G.703 and G.823. The ERM04A-8E1 features diagnostic capabilities for performing remote loopback. The operator at either end of the line may test both the ERM04A-8E1 and the line in the digital loopback mode. The Ethernet copper interface supports auto-negotiation and auto MDI/MDIX, allowing plug-and-play Ethernet connection without any additional configuration.

Interface	Framing	CCS+CRC
	Standard	ITU-T G.703/G.704/G.706 & G.732, G.823
	Bit rate	2.048Mbps± 50ppm (up to 8E1)
	Line code	HDB3
	Clock setting	Internal OSC or recovery clock
	Receive level	-43dB
	Line impedance	75 ohm (BNC) / 120 ohm (RJ45)
	Jitter Performance	Complies with ITU-T G.823
	Pulse Mask	Complies with ITU-T G.703
	Pulse amplitude	Nominal 2.37V ± 10%
	Delay Variance	220ms
	Connector	BNC / RJ45
	Diagnostics	Digital remote loopback
	Standard	IEEE 802.3, 802.3u
	Data rate	10/100Base-TX, Half/Full duplex 100Base-FX
	Connector	RJ45 10/100Base-TX SFP-LC 100Base-FX
Indications		Power, ALM,E1 signal loss , E1 Alarm(AIS，LOF， RAI, LOMF), LAN link /ACT, 10/100M , SD(100Base-FX)
Power Input		AC adapter : 100~240VAC to 12VDC 100 ~ 240VAC, 18 ~ 75VDC
Power Consumption		< 12W
Dimensions		DC12 : 160 x 88 x 24mm (D x W x H) AC/DC48/AD : 201 x 135 x 35mm (D x W x H)
Weight		DC 12 : 280g, AC/DC48/AD : 580g
Temperature		0 ~ 50°C (Operating), -10 ~ 70°C (Storage)
Humidity		10 ~ 90% RH (non-condensing)
Certifications		CE, FCC, RoHS
MTBF		7,500 hrs (25°C)

Features

- Connects one Fast Ethernet over 8E1 links (1.984Mbps to 15.87Mbps)
- Built-in HDLC bridge operates at WAN rate
- Auto-Negotiation
- Maximum 220ms delay variance between E1 link
- Unbalanced E1/BNC or balanced E1/RJ45
- Fully compatible with ERM04A chassis
- SNMP management with ERM04A chassis
- LED Alarm indication

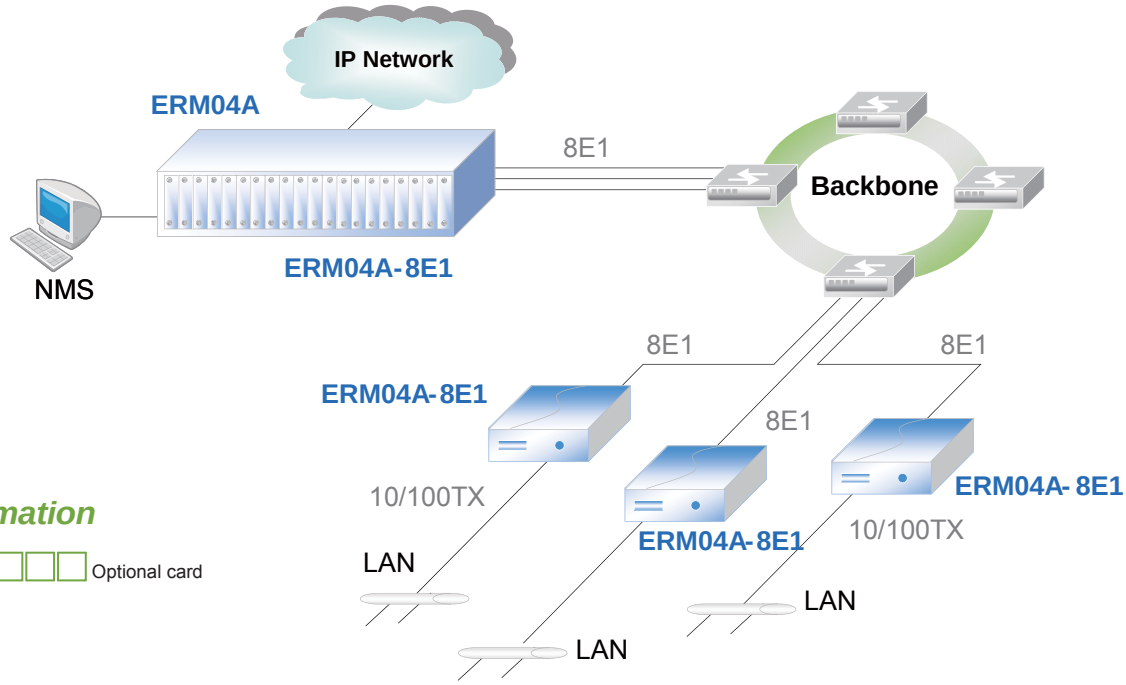

Ordering Information

ERM04A-□□□□□ Optional card
8E1

Example: ERM04A-8E1

16E1 (32Mbps) Inverse Multiplexer

ERM04A-16E1

The ERM04A-16E1 is a slide-in card E1 inverse multiplexer capable of bundling up to 16 E1 lines for cost-effective connection of 10/100BaseTX or 100Base-FX LANs over multiple E1 transports. The ERM04A-16E1 inverse multiplexer transmits up to a 31.74Mbps Ethernet bridge channel (GFP-F encapsulated) over 16 E1 links. ERM04A-16E1 bridges the gap between E1 and E3, allowing bridges to operate at faster rates. It also provides high speed access to SDH/SONET backbones where the only access services available are E1 lines. The ERM04A-16E1 supports an E1 attenuation of up to 43 dB on twisted pair or coax cable. This provides an approximate operating range up to 2km (using 22AWG). The ERM04A-16E1 fully meets E1 specifications including ITU-T G.703 and G.823. The ERM04A-16E1 features diagnostic capabilities for performing remote loopback. The operator at either end of the line may test both the ERM04A-16E1 and the line in the digital loopback mode. The Ethernet copper interface supports auto-negotiation and auto MDI/MDIX, allowing plug-and-play Ethernet connection without any additional configuration.configuration.

Interface	Framing	CCS+CRC
	Standard	ITU-T G.703/G.704/G.706 & G.732, G.823
	Bit rate	2.048Mbps± 50ppm (up to 16E1)
	Line code	HDB3
	Clock setting	Internal OSC or recovery clock
	Receive level	-43dB
	Line impedance	75 ohm (BNC) / 120 ohm (RJ45)
	Jitter Performance	Complies with ITU-T G.823
	Pulse Mask	Complies with ITU-T G.703
	Pulse amplitude	Nominal 2.37V ± 10%
	Delay Variance	220ms
	Connector	RJ45, BNC
	Diagnostics	Digital remote loopback
	Standard	IEEE 802.3, 802.3u
	Data rate	10/100Base-TX, Half/Full duplex 100Base-FX
	Connector	RJ45 10/100Base-TX SFP-LC 100Base-FX
Indications		Power, ALM,E1 signal loss , E1 Alarm（AIS，LOF， RAI, LOMF), LAN link /ACT, 10/100M , SD(100Base-FX)
Power Input		AC adapter : 100~240VAC to 12VDC 100 ~ 240VAC, 18 ~ 75VDC
Power Consumption		< 12W
Dimensions		DC12 : 160 x 88 x 24mm (D x W x H) AC/DC48/AD : 201 x 135 x 35mm (D x W x H)
Weight		DC 12 : 280g , AC/DC48/AD : 580g
Temperature		0 ~ 50°C (Operating), -10 ~ 70°C (Storage)
Humidity		10 ~ 90% RH (non-condensing)
Certifications		CE, FCC, RoHS
MTBF		7,500 hrs (25°C)

Features

- Connects one Fast Ethernet over 16E1 links(1.984Mbps to 31.74Mbps)
- Built-in HDLC bridge operates at WAN rate
- Auto-Negotiation
- Maximum 220ms delay variance between E1 link
- Unbalanced E1/BNC or balanced E1/RJ45
- Fully compatible with ERM04A chassis
- SNMP management with ERM04A chassis
- LED Alarm indication

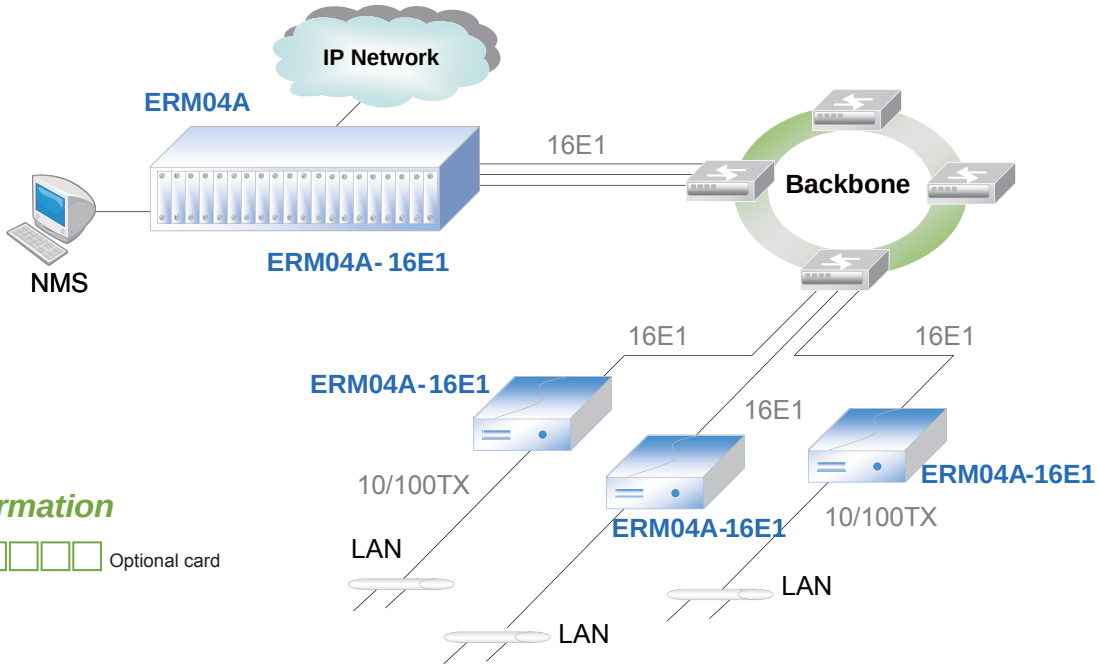

Ordering Information

ERM04A-□□□□□ Optional card

16E1

Example: ERM04A-16E1

4U, 11 slot E1 Digital Cross Connect Multiplexer w/ SNMP

ERM-DXC

The ERM-DXC is a 4U 19(23)" 11 slot rack type E1 Digital Cross Connect for Fractional E1 network access which is nested in a concentrator and provides an economic solution for central site users. There are 11 slots available for ERM-DXC I/O cards for installation into the ERM-DXC rack. A CPU card is installed into the last slot for configuration and management. The CPU card provides both local control via an RS-232 menu driven console port and remote management using proprietary NMP software. Each DXC-E1 card may be linked to another ERM-DXC Rack to provide the main functions of a DDN network. The ERM-DXC optionally accommodates up to two separate power supplies, which may derive power from AC (110/220) or DC (-48V) power sources. When two power supplies are installed, the modules provide power sharing and are hot swappable even during the E1 cards' transmission. The ERM-DXC provides all interface connections on the rear panel. Cable adapters terminating in BNC or RJ-45 are used for 8xE1 Line interface connections, while optional cable adapters are used to convert the DB-62F DCE ports of the I/O cards to V.35, RS-530, RS-449, RS-232 or X.21. When cards are inserted in slots, LEDs will show the Line status on the front panel.

Features

- 4U 19(23)" 11-slot chassis
- Digital cross connect solution for up to 64 E1
- Cross connect and multiplex data, voice and signaling for up to 2048 timeslots
- Supports Hot-swapping of all cards
- Dual power sharing design
- All interface connectors are on the rear panel
- LED line status display on each card face
- Supports console terminal to setup and monitor operation locally

Ports	
8E1 I/O module	Interface type: G.703, G.704 Framing: Unframed/ Framed, CCS(PCM31)/ CAS(PCM30)/ CRC4 on/off Bit rate: 2.048Mbps±50 ppm Line Code: AMI/ HDB3 Receiving level: 0 to -43dB Line Impedance: 75 ohm(BNC) / 120 ohm (Molex, RJ-45) Jitter Performance: According to ITU-T G.823 Pulse amplitude: Nominal 2.37V ±10% for 75ohm, Nominal 3.00V ±10% for 120ohm Zero amplitude ±0.1V Connector: BNC for unbalanced and RJ-45 for balanced Transmit freq: Internal timing±30 ppm tracking: Loopback timing±50 ppm, External timing±100 ppm
Nx64 module	Interface types: RS530,RS449, RS232, X.21, V.35, Connector: High density DB62F with cable adapter Line code: NRZ Data Rate: N x 64kbps
Async module	Interface types: RS232 Connector: High density DB62F with cable adapter Line code: NRZ Data Rate: ≤19.2kbps x 6ch or 64kbps 6ch
Async module	Interface types: RS530, RS449, X.21,V.35, Connector: High density DB62F with cable adapter Line code: NRZ Data Rate: 64kbps x 3ch or 128kbps 3ch
X.50 module	Interface types: RS232 Connector: High density DB62F with cable adapter Line code: NRZ Data Rate: ≤19.2kbps x 5ch
Ethernet module	Interface types: Ethernet 10Base-T Connector: High density DB62F with cable adapter Data Rate: LAN 10Mbps, Half duplex WAN Nx64kbps
Indications	Power, TD, RD, Error, Test, Singal loss, Sync loss,, Alarm
Standard	TU-T G.703, G.704, G.706, G.732 and G.823
Power Input	AC: 100~240VAC DC: -48VDC
Power Consumption	80W
Dimensions	350 x 438 x 176mm (D x W x H)
Weight	8 Kg
Temperature	0~50°C (Operating), -10~70°C (Storage)
Humidity	10~90% non-condensing
MTBF	57,000 hrs (25°C)

Ordering Information

ERM-DXC-□□□□□ Model type

CH : 4U 19" 11 slot chassis
AC : 100 ~ 240 AC power card
DC : 36 ~ 72 DC power card

Example: ERM-DXC-CH

ERM-DXC-□□□□□ Model type

8E1 : 8xE1 card
ET10 : 2port 10Base-T card
ASYN : 4port RS232/V.24 card
X50 : 5x X.50 card
64/128 : V35/X21/RS530 64k or 128kbps card
N64 : V35/X21/RS530 Nx64kbps card

Example: ERM-DXC-8E1

ERM-DXC Front view

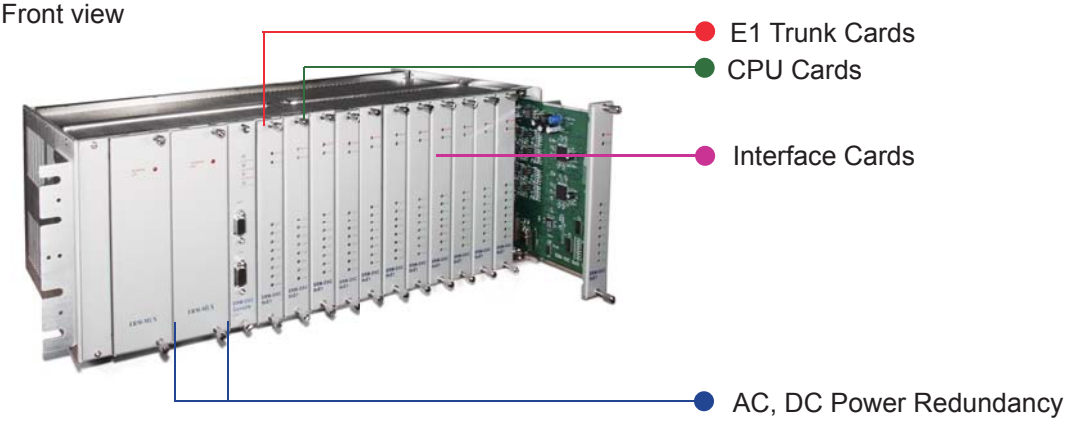

ERM-DXC Back view

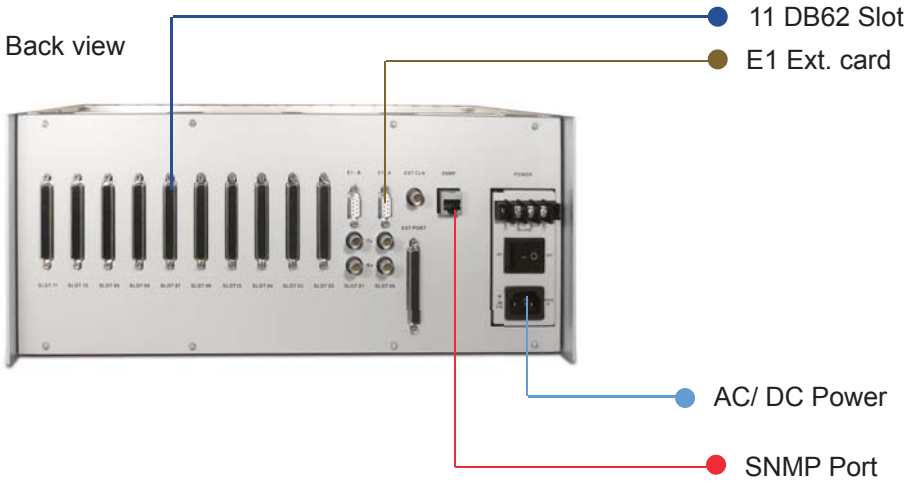

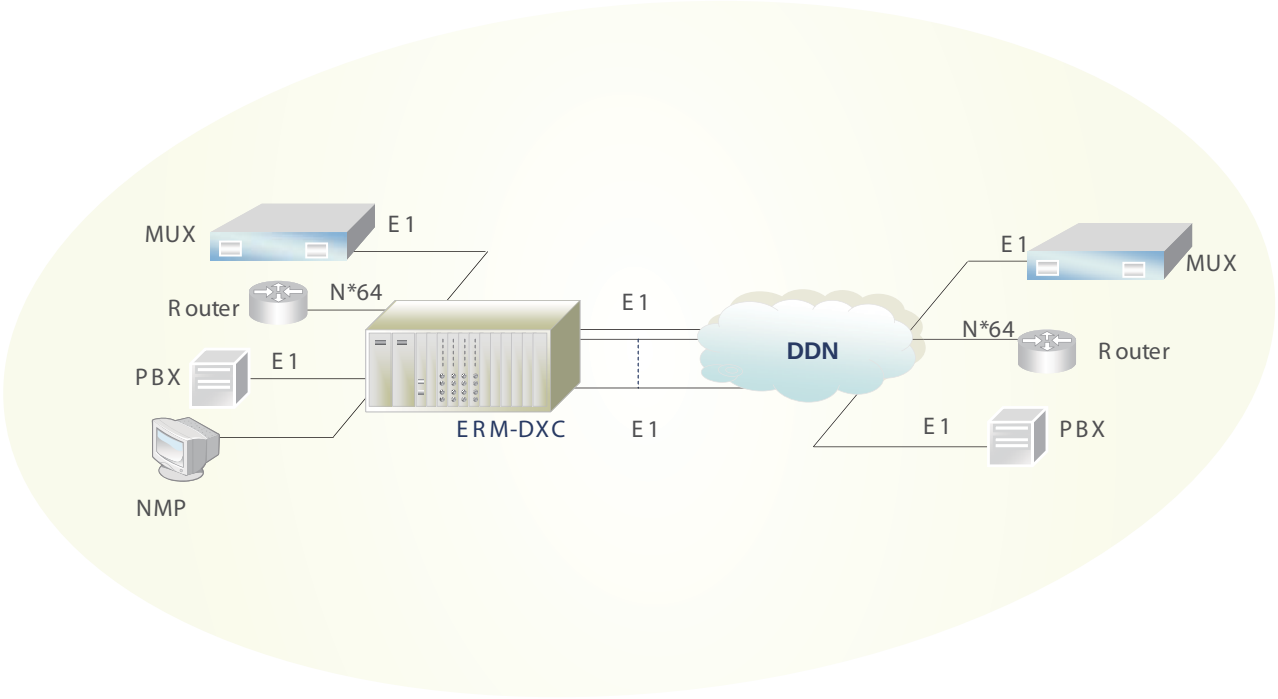

CPU Card

- Provides the timing systems selection and timing signals
- Provides the control and switching for I/O modules
- parameters and functions
- Core matrix for 64 El cross connection

8E1 card

- Single E1 or 1+1 E1 card (E1 and Sub-E1), provides unbalanced BNC or balanced RJ45 connector
- Each E1 loop provides clock to be used as system clock source

Nx64 card

- 2-channels, high speed data interface
- Interface type: RS-530/X.21/RS-449/RS-232
- Connector: HDB62 female with appropriate cable adapter
- Line code: NRZ
- Data rate: N*64kbps, where N=1 to 31 in CCS and N=1 to 30 in CAS

Ethernet card

- Supports 2 independent HDLC bridge channels
- 10/100Base-TX bridge
- Auto-Negotiation
- Auto MDI/MDIX
- Forward 1522 bytes (Max.) packets
- Supports IEEE 802.1q Tag VLAN pass thru
- Support flow control (Pause)

X50 card

- Hot swappable card
- Supports 5 sub-rate channels (up to 19.2k) in one 64k timeslot
- RS-232 standard data interface
- Connector: HDB62 female with appropriate cable adapter

Async card

- Hot swappable card
- Supports 4 channels of 64k, 38.4k Asyn or 128k Sync
- RS-232 standard data interface
- Connector: HDB62 female with appropriate cable adapter

FXO

- Hot swappable card
- Supports 3 channels of 64k or 128k RS530/449/232/X21/V35
- Connector: HDB62 female with appropriate cable adapter

1U, 8/16 Channel E1 Digital Cross Connect

ETU-DXC

The ETU-DXC is a 1U 19" stand-alone or rack mountable Digital Cross Connect offering two models; the ETU-DXC/8 and the ETU-DXC/16. These units provide 8 or 16 E1 circuits (inputs and outputs) respectively. Within the E1 circuits, non-blocking, fully transparent cross-connects between 64Kbps timeslots can be efficiently implemented. This equipment may be used as a core building block in a Digital Data Network (DDN) based upon multiple E1 lines. When combined with Time Division Multiplexing (TDM) equipment such as the ETU02-MUX or ERM-MUX/PLUS, the main functions of a DDN network may be performed. Local control is provided via an RS-232 menu driven console port and remote management using proprietary NMP software. This equipment does not support signaling and is therefore not applicable for voice applications.

Features

- 1U 19(23)" stand-alone rack, 8 or 16 E1 port
- Balanced E1 (120ohm) or unbalanced E1 (75ohm) switchable
- Complies with all ITU-T specifications
- E1 point-to-point 64Kbps transparent data cross connect
- Supports console terminal menu configuration and proprietary NMS
- System clock recovered from any E1 or from internal oscillator

E1 interface	Framing	Unframed/ Framed
	Bit rate	2.048Mbps±50 ppm
	Line Code	AMI/ HDB3
	Receiving level	-20 / -43dB
	Line Impedance	75 ohm(BNC) / 120 ohm (Molex, RJ-45)
	Jitter Performance	According to ITU-T G.823
	Pulse amplitude	Nominal 2.37V ±10% for 75ohm Nominal 3.00V ±10% for 120ohm
	Connector	DB25 with cable adapter
	Management	NMP management system
	Diagnostics	Local digital, local analog, remote loopback
	E1 system Tx clock:	
	Recovery: Recovered from any one E1 Rx signal	
	Internal: 2.048MHz±50ppm internal oscillator	
Indications	LEDs (Power, Alarm, Activity)	
Standard	ITU-T G.703, G.704, G.706, G.732 and G.823	
Power Input	AC: 100~240VAC	DC: -18 ~72VDC
Power Consumption	20W	
Dimensions	235 x 430 x 45mm (D x W x H)	
Weight	2.5kg	
Temperature	0~50°C (Operating) ,-10~70°C (Storage)	
Humidity	10~90% non-condensing	
MTBF	57,000 hrs (25°C)	

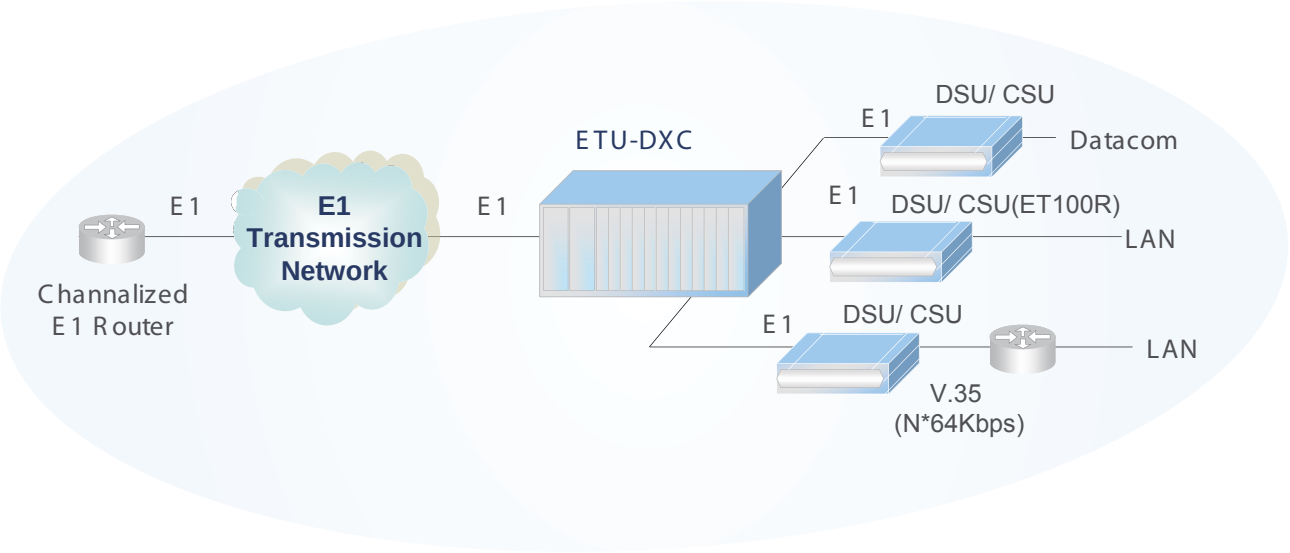

Ordering Information

ETU-DXC/A- □□□□□ Model type

8-AC : 8 E1 with AC power
16-AC : 16E1 with AC power
8-DC : 8 E1 with DC power
16-DC : 16 E1 with DC power

Example: ETU-DXC/A-8-AC

Single E1/T1/J1 over Ethernet (IP)

IPM-1SE

The IPM-1SE is a 1U half 19" stand-alone or rack mountable pseudo wire (PW) device that transmits a real-time bit stream of TDM data (Time Division Multiplexing) over a packet switched network (IP network). Unlike other traffic types that can be carried over pseudo wires (e.g. ATM, frame relay, and Ethernet), TDM is a real-time bit stream, which traditionally carries voice-grade telephony channels. One critical issue in implementing TDM over IP is clock recovery. In native TDM networks the physical layer carries highly accurate timing information along with the TDM data, but when emulating TDM over Packet Switched Networks this synchronization is absent. The IPM-1SE is able to accurately regenerate the timing signals to the exacting standards and conformance with ITU-T. As core networks continue their conversion from traditional switched technology to IP based networks, the IPM-1SE provides a solution to continue using legacy TDM equipment, such as PABX, while the core migrates to IP based networks.

Features

- Supports synchronous TDM based and Ethernet service over IP network
- Devices can be cascaded to increase the number of interfaces
- Point to point application for E1/T1/J1 over IP
- Provides accurate E1/T1/J1 clock recovery
- Supports f/w upgrade
- Console terminal CLI, Telnet and MIB-2 SNMP support

Ports	Ethernet Data rate: 10/100Base-Tx, Half/full duplex Connector: RJ45 E1 interface Framing: Unframed Bit rate: 2.048Mbps Line Code: HDB3 Line Impedance: 75 ohm(BNC) / 120 ohm(RJ-45) Pulse amplitude:Nominal 2.37V ±10% for 75ohm, Nominal 3.00V ±10% for 120ohm Zero amplitude: ±0.1V Receive level: short haul -15dB, long haul -43dB Connector: RJ45 for 120 ohms, BNC for 75 ohms T1 interface Framing: Unframed, D4, ESF Bit rate: 1.544Mbps Line Code: B8ZS / AMI Line Impedance: 100 ohms Pulse amplitude: Nominal 3.0 ±20%, Zero amplitude: ±0.15V Receive level: short haul -15dB, long haul -43dB Connector: RJ48C
Indications	System, TDM, Uplink, LAN
Standard	TU-T G.703, G.704, G.706, G.732 and G.823 IEEE802.3, 802.3u, 802.1p and 802.1q
Power Input	AC: 100~240VAC DC: -18 ~72VDC
Power Consumption	15W
Dimensions	235 x 195 x 45mm (D x W x H)
Weight	1.6kg
Temperature	0~50°C (Operating) ,-10~70°C (Storage)
Humidity	10~90% non-condensing
Certification	CE, FCC, RoHS
MTBF	57,000 hrs (25°C)

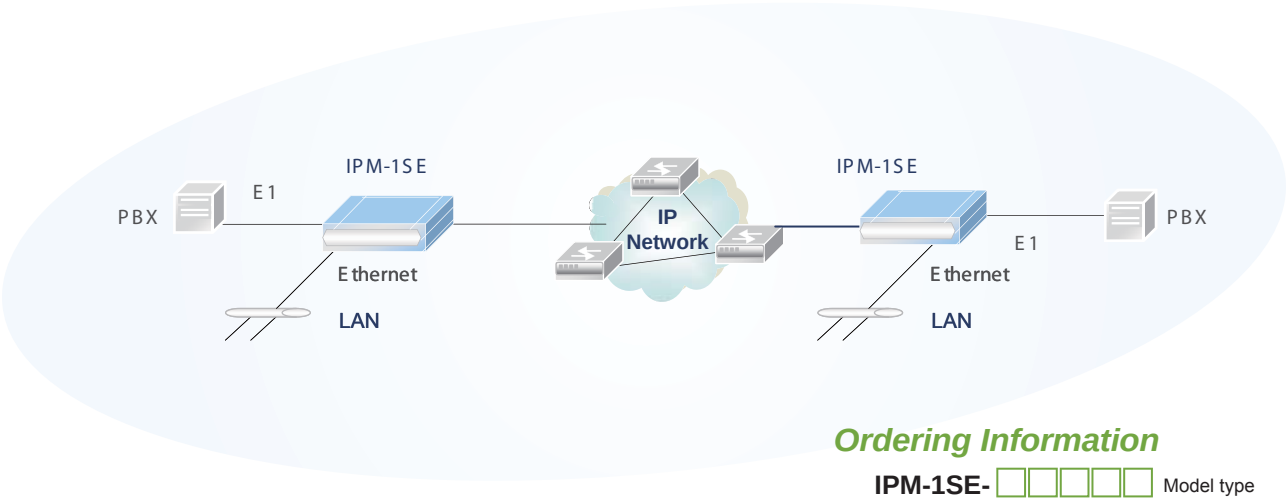

Ordering Information

IPM-1SE- □□□□□ Model type

AC : 100 ~ 240VAC
DC : -36 ~ -72VDC

Example: IPM-1SE-AC

4E1 over Ethernet Access Unit

IPM-4SE

IPM-4SE is designed as a multiservice access platform for PDH over IP applications. E1 frames can be mapped/de-mapped into/from IP packets. An adaptive clock recovery method for Ingress PDH (PSN ->TDM) clock generation is implemented to support E1(ITU-T G.823) Jitter performance.

IPM-4SE provides cost-effective applications of traditional circuit switched system over IP. With IPM-4SE, it is easy to interconnect existing phone systems over IP that are used to carry data, voice and video.With high precision clock recovery technology, IPM-4SE is capable of supporting 2G/3G backhaul and provides smooth services. IPM-4SE can transparently transport proprietary signaling that are required to support PBX features, including call conference, call forwarding and SS7.

Features

- Support IEFT RFC4533 Structure-Agnostic TDM over Packet (SAToP), Metro Ethernet Forum MEF8.
- 4 x E1 NRZ Serial Interface with LOS/AIS detection
- Use Raw Encapsulation method for PDH payload over IP packet.
- Support Circuit Emulation Service over IP.
- Comply with IEFT draft standard for CESoPSN and SAToP; Metro Ethernet Forum MEF8 IA.
- Support both Point-to-Point and Point-to-Multipoint operation.
- Support 4 independent Adaptive Clock recovery block for Ingress PDH (PSN -> TDM) clock generation. Recovered clock jitter is compliant with ITU-T G.824 (E1 Jitter Control).
- Independent configurable jitter buffer depth to compensate up to 250ms of Packet Delay Variation.
- Support framed/unframed traffic (ITU-T G.704)
- Lost packets processing/compensation via PW (Pseudo Wire) control field Sequence Number.
- Provide Subscriber side Data traffic bandwidth control to guarantee enough TDM payload bandwidth.
- PDH LOS detection triggered PWL field or payload AIS generation at Egress direction (TDM -> PSN).
- Configurable IEEE 802.3 DA/SA assignment.
- Configuration can be made through RS-232 console port or GUI (Graphic User Interface).

Specifications

User interface

Port: up to 4 x E1 (ITU-T G.703)
Interface: RJ-48c (120 Ohm)
Line Coding: HDB3

Ethernet interface

Port: 100 Base-T Ethernet
Interface: RJ-45

Dimensions

44 x 370 x 215mm (H x W x D)

Main power supply

AC: 110 ~ 240V @ 47 ~ 65Hz
DC: -72V ~ -36V (Option)

Environment condition

Ambient temperature: 0°C ~ 50°C (0°C ~ 65°C, optional)
Storage temperature : 0°C~ 85°C
Relative humidity: 5 ~ 95% non condensing

Configuration and management

RS-232 console port (Craft Terminal) or SNMP-based management

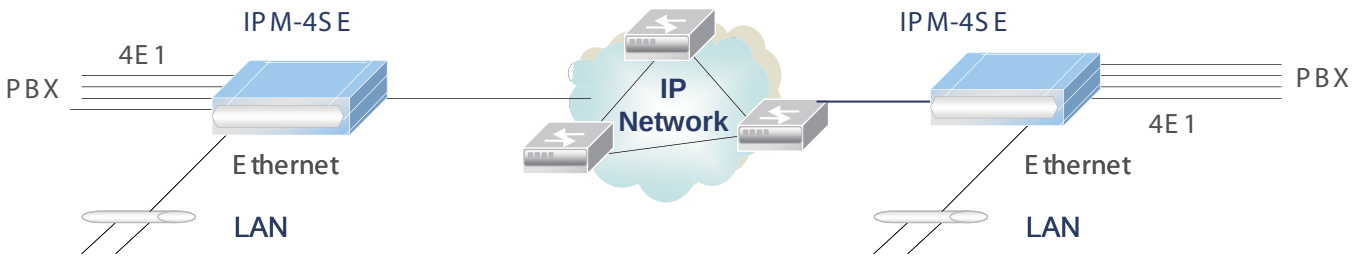

Ordering Information

IPM-4SE- □□□□□ Power type

AC : AC Power
DC : DC Power
AD : AC+DC Power

Example: IPM-4SE-AC

8E1 over Ethernet Access Unit

IPM-8SE

IPM-8SE is designed as a multiservice access platform for PDH over IP applications. E1 frames can be mapped/de-mapped into/from IP packets. An adaptive clock recovery method for Ingress PDH (PSN -> TDM) clock generation is implemented to support E1 (ITU-T G.823/) Jitter performance.

IPM-8SE provides cost-effective applications of traditional circuits witched system over IP. With IPM-8SE, it is easy to interconnect existing phone systems over IP that are used to carry data, voice and video. With high precision clock recovery technology, IPM-8SE is capable of supporting 2G/3G backhaul and provides smooth services. IPM-8SE can transparently transport proprietary signaling that are required to support PBX features, including call conference, call forwarding and SS7.

Features

- Support IEFT RFC4533 Structure-Agnostic TDM over Packet (SAToP), Metro Ethernet Forum MEF8.
- 8 x E1 NRZ Serial Interface with LOS/AIS detection
- Use Raw Encapsulation method for PDH payload over IP packet.
- Support Circuit Emulation Service over IP.
- Comply with IEFT draft standard for CESoPSN and SAToP; Metro Ethernet Forum MEF8 IA.
- Support both Point-to-Point and Point-to-Multipoint operation.
- Support 8 independent Adaptive Clock recovery block for Ingress PDH (PSN -> TDM) clock generation. Recovered clock jitter is compliant with ITU-T G.824 (E1 Jitter Control).
- Independent configurable jitter buffer depth to compensate up to 250ms of Packet Delay Variation.
- Lost packets processing/compensation via PW (Pseudo Wire) control field Sequence Number.
- Provide Subscriber side Data traffic bandwidth control to guarantee enough TDM payload bandwidth.
- PDH LOS detection triggered PW L field or payload AIS generation at Egress direction (TDM -> PSN).
- Configurable IEEE 802.3 DA/SA assignment.
- Configuration can be made through RS-232 console port or GUI (Graphic User Interface).

Specifications

User interface (CPE Side)

Port: up to 8 x E1 (ITU-T G.703) Interface: RJ-48c (120 Ohm)
Line Coding: HDB3

Ethernet interface (CPE / CO Side)

WAN Port: 2 x 100 Base-T Ethernet
LAN Port: 1 x 100 Base-T Ethernet
Interface: RJ-45

Dimensions

44 x 244 x 302.5mm (H x W x D)

Main power supply

AC: 110 ~ 240V @ 47 ~ 65Hz
DC: -72V ~ -36V (Option)

Environment condition

Ambient temperature: 0°C ~ 50°C (0°C ~ 65°C, optional)
Storage temperature : 0°C~ 85°C
Relative humidity: 5 ~ 95% non condensing

Configuration and management

RS-232 console port (Craft Terminal)

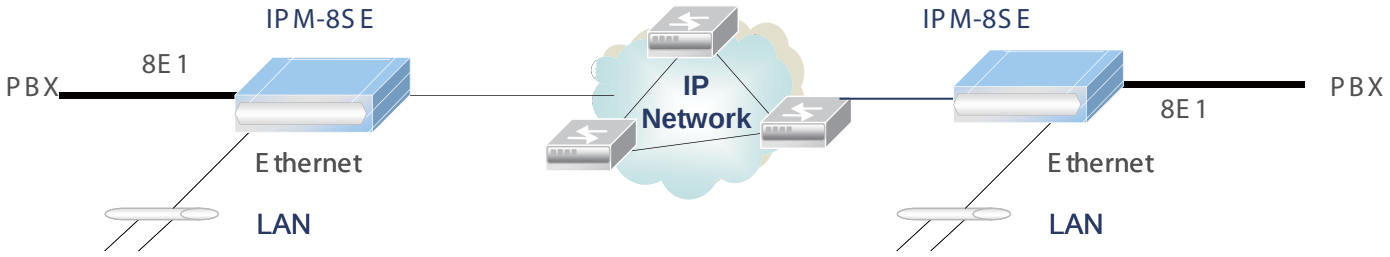

Ordering Information

IPM-8SE- □□□□□ Power type

AC : AC Power
DC : DC Power
AD : AC+DC Power

Example: IPM-8SE-AC

4U 12 Slot Managed G.703 64Kbps Co-directional Concentrator rack 115

G703/64-RM

The G703/64-RM is a 4U 19(23)" rack type G.703 64Kbps co-directional converter which is nested in a hub to provide solutions for central office installations. There are 13 slots available for hot swappable G.703 64K cards for installation into the G703/64-RM rack. An optional SNMP card can be installed into the last slot for configuration and management, leaving 12 slots available for G.703 64K cards. The SNMP card provides both local control via an RS-232 serial console port and remote management using industry standard SNMP protocol via an Ethernet 10BASE-T connection. Each G.703 64K card may be linked to a remote G.703 64K co-directional stand-alone converter for various 64kbps data communication services. The G703/64-RM accommodates an optional second hot swappable shared power supply module which may derive power from AC (90-250) or DC (-48V) power sources. On the rear panel, combinations of RJ-45 and wire-wrap terminals are utilized for 64K co-directional line interface connections. Adapter cables are used to convert the HDB26F DCE data ports to V.35, RS-530, RS-449, X.21 or RS-232 depending on the installed card.

Features

- 19" 4U G.703 / 64kbps Rack Mount Concentrator
- Up to 12 slots for independent LTU-cards + 1 slot for SNMP management
- Supports hot swapping
- Single port access to G.703 64kbps services
- Interface Supports V.35, X21, RS-232/449/530
- Fully transparent signal conversion
- SNMP Management
- Perform local and remote loopback functions

Interface	G.703/64K interface Types: Co-directional 64Kbps Frame format: Unframed Line: 4 wires, 0.5 ~0.7mm twisted pair cable Impedance: 120 ohm Pulse amplitude:Nominal 1.0V ±10 Zero amplitude: ±0.1V Clock frequency: 64KHz Frequency tracking: ±100ppm Connector: wire wrap and RJ-45 Data interface Types: V.35, X.21, RS530, RS449, RS232 with adapter cable Data rate: 64Kbps for Sync, 19.2Kbps for Async Data type: Balanced for V.35, X.21, RS530, RS449, Unbalanced for RS232 Control signals: CTS constantly on DSR constantly on, except during test loops DCD constantly on or follow RTS except when signal loss
Indications	LEDs (Power, TD, RD, RTS, DCD, TX, RX, Signal, Timing, Err, Test)
Standard	ITU-T G.703, G.823
Power Input	AC: 90 ~ 250 VAC, DC: -36 ~ -76 VDC
Power Consumption	80W
Dimensions	285 x 438 x 180mm (D x W x H)
Weight	6.6kg
Temperature	0~50°C (Operating) ,-10~70°C (Storage)
Humidity	10~90% non-condensing
Certification	CE, FCC
MTBF	57,000 hrs (25°C)

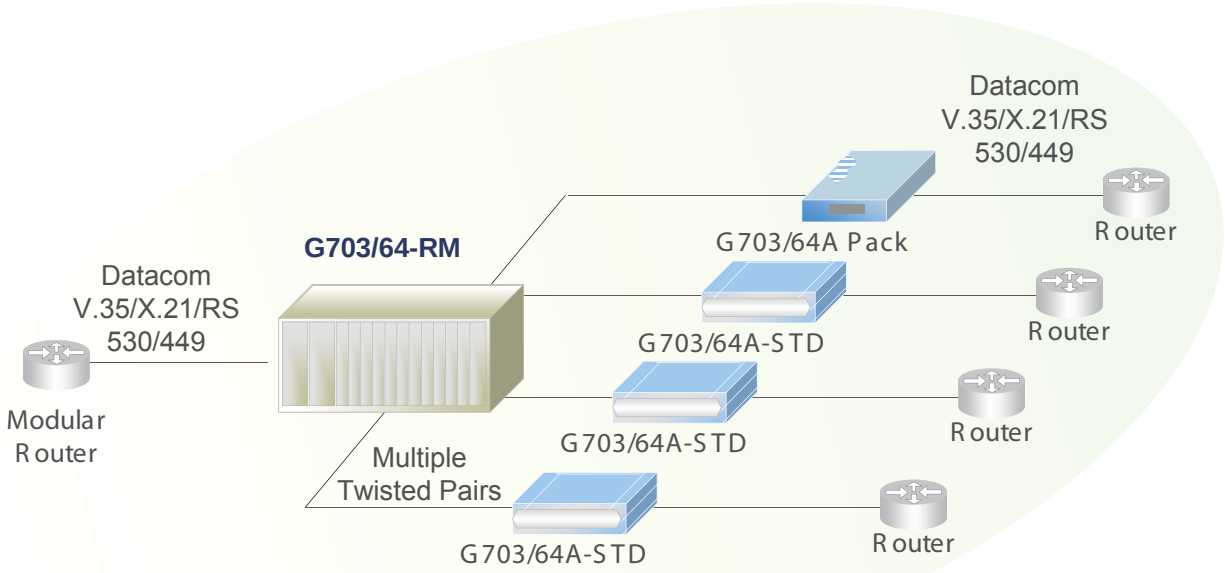

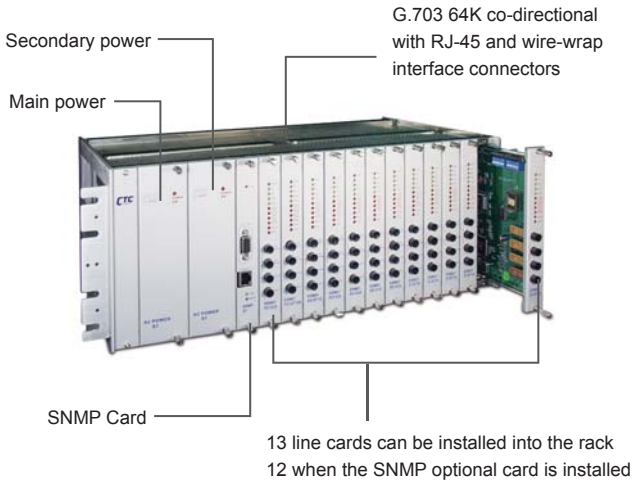

G703/64-RM-SNMP

G703/64-RM
co-directional Line Card

Interface Cable Adapters

CAB-HD26MB34M-V35
CAB-HD26MB34F-V35

CAB-HD26DB25M-530
CAB-HD26DB25F-530

CAB-HD26DB37M-449
CAB-HD26DB37F-449

CAB-HD26DB15M-X21
CAB-HD26DB15F-X21

CAB-HD26DB25M-232
CAB-HD26DB25F-232

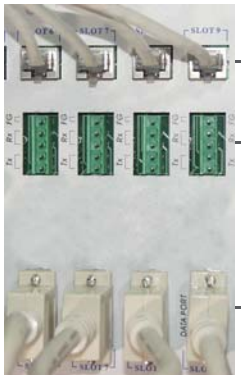

Rear Panel Connections

Ordering Information

G703/64-RM-□□□□□ Model type

CH/AC : chassis for AC power
CH/DC : chassis for DC power
AC : 100 ~ 240 AC power card
DC : 36 ~ 72 DC power card

Example: G703/64-RM-CH/AC

G703/64-RM-□□□□□ Model type

SNMP : SNMP card
Serial : V35/X21/RS530 card

Example: G703/64-RM-Serial

G.703 64Kbps Co-directional to V35/RS530/449/232/X21

G703/64A-STD

The G703/64A-STD is a 1U half 19" stand-alone or rack mountable interface converter that allows full conversion between G.703 64Kbps co-directional services and a number of data port interfaces including ITU V.35, X.21, EIA RS-530, RS-449 and RS-232 hardware. The interface converters are very easy to implement. Simply select the mode, appropriate interface settings and adapter cable, configure the required timing for translation via internal DIP switches, and connect to appropriate power. This model features full compliance with all the relevant ITU & EIA standards under 64Kbps network environments with high reliability. G.703 64K Family of products may be used in Packet Switching Networks, ISDN and DDN. They are also useful for data terminals which access PCM, 64K/2048Kbps digital channels as well as digital microwave channels. Additionally, it may be connected to satellite communication channels.

Features

- 1U half-19" single port G703 64kbps access unit
- Interface: V.35, X.21, RS530, RS449 and RS232
- Data rate: 64Kbps Sync and Async RS232 up to 19.2Kbps
- Fully transparent signal conversion
- Selectable timing modes: recovery, transparent, data port or internal OSC
- Data port provides 10bit FIFO
- Diagnostics: local and remote analog and local digital loopback

Interface	G.703/64K interface Types: co-directional, centra-directional, or contra-directional 64Kbps Frame format: Unframed Line: 4 wires, 0.5 ~0.7mm twisted pair cable Range: up to 800 meters over 24AWG Impedance: 120 ohm Pulse amplitude: Nominal 1.0V ±10 Zero amplitude: ±0.1V Clock frequency: 64KHz Frequency tracking: ±100ppm Connector: DB9F Data interface Types: V.35, X.21, RS530, RS449, RS232 with adapter cable Data rate: 64kbps for Sync. 19.2kbps for Async Connector DB25F
Indications	LEDs (Power, TD, RD, RTS, DCD, TX, RX, Signal, Timing, Err, Test)
Standard	ITU-T G.703, G.823
Power Input	AC: 90 ~ 250 VAC DC24: -18 ~ -36 VDC, DC48: -36 ~ -72 VDC
Power Consumption	10W
Dimensions	235 x 195 x 45mm (D x W x H)
Weight	1.6kg
Temperature	0~50°C (Operating) ,-10~70°C (Storage)
Humidity	10~90% non-condensing
Certification	CE, FCC
MTBF	57,000 hrs (25°C)

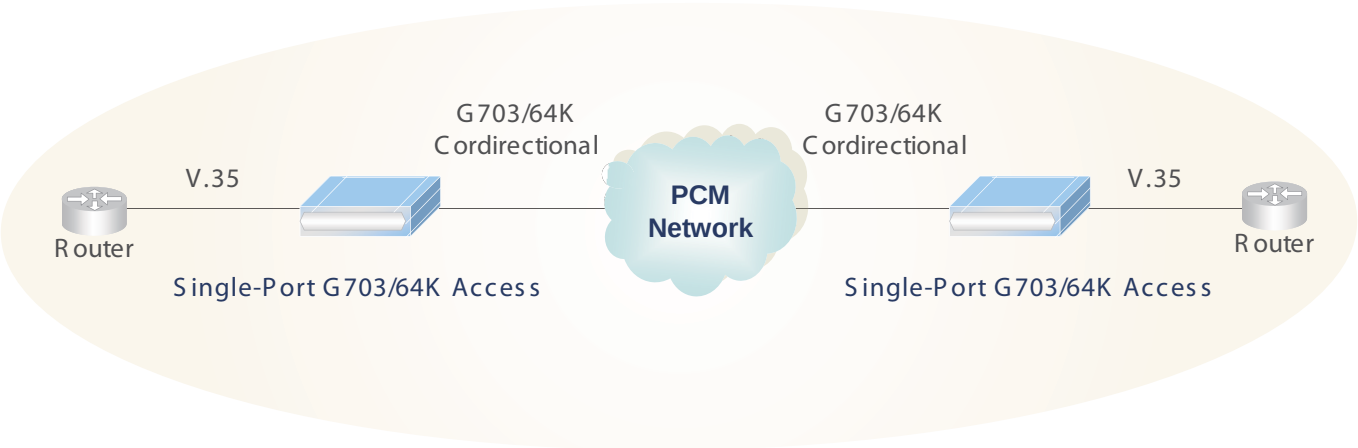

Ordering Information

G703/64A-STD-□□□□□ Model type

AC : 100 ~ 240VAC
DC : -36 ~ -72VDC

Example: G703/64A-STD-AC

G.703 64Kbps Co-directional to V35/RS530/449/232/X21

G703/64A

The G703/64A is a compact stand-alone interface converter that allows full conversion between G.703 64Kbps co-directional services and a number of data port interfaces including ITU V.35, X.21, EIA RS-530, RS-449 and RS-232 hardware. The interface converters are very easy to implement. Simply select the mode and appropriate interface settings by DIP switch, select an adapter cable, configure the required timing for translation via internal DIP switches, and connect to appropriate power. This model features full compliance with all the relevant ITU & EIA standards under 64Kbps network environments with high reliability. G.703 64K Family of products may be used in Packet Switching Networks, ISDN and DDN. They are also useful for data terminals which access PCM, 64K/2048Kbps digital channels as well as digital microwave channels. Additionally, it may be connected to satellite communication channels

Features

- Palm size single port G703 64kbps access unit
- Interface: V35, X21, RS530, RS449 and RS232 with cable adapters.
- Data rate : 64Kbps Sync and Async RS232 up to 19.2Kbps
- Fully transparent signal conversion
- Selectable timing modes: recovery, transparent, data port or internal OSC
- Selectable co-directional, centra-directional or contra-directional
- Diagnostics: local analog and digital loopback

Interface	G.703/64K interface Types: Co-directional, Centra-directional, or Contra-directional 64Kbps Frame format: Unframed Line: 4 wires, 0.5 ~0.7mm twisted pair cable Range: up to 800 meters over 24AWG Impedance: 120 ohm Pulse amplitude: Nominal 1.0V ±10 Zero amplitude: ±0.1V Clock frequency: 64KHz Frequency tracking: ±100ppm Connector: RJ-45 Data interface Types: V.35, X.21, RS530, RS449, RS232 with adapter cable Data rate: 64kbps for Sync. 19.2kbps for Async Connector DB25F
Indications	LEDs (Power, RD, SD, GRD, GSD, Signal loss, Timing loss)
Standard	ITU-T G.703, G.823
Power Input	9VDC
Power Consumption	5W
Dimensions	135 x 79 x 30mm (D x W x H)
Weight	180g
Temperature	0~50°C (Operating) ,-10~70°C (Storage)
Humidity	10~90% non-condensing
Certification	CE, FCC
MTBF	57,000 hrs (25°C)

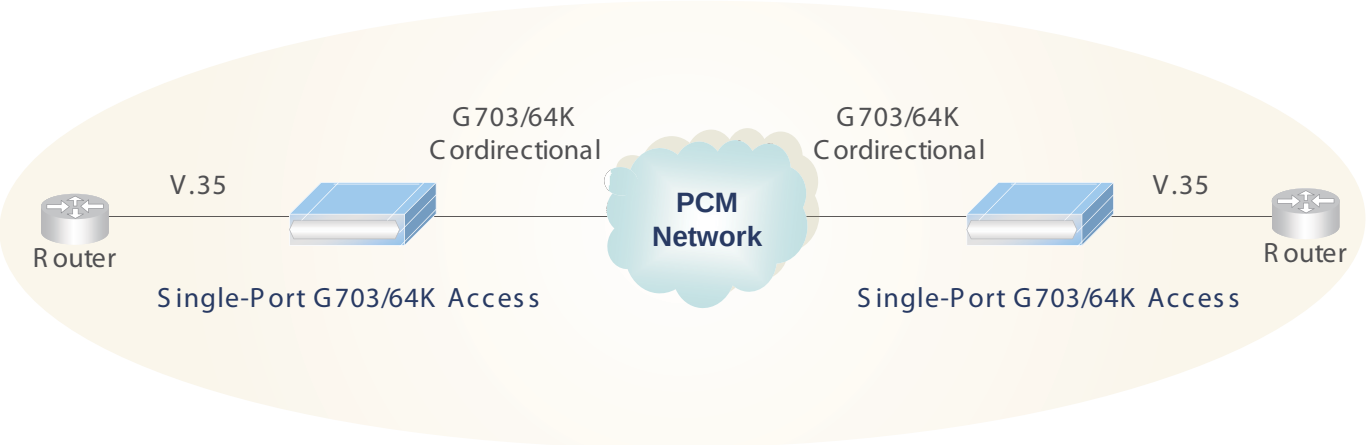

Ordering Information

G703/64A : V35/X21/RS530/RS449/RS232 Converter

G.703 Coax to Twisted Pair

Balun-P/S / Balun-B1/B2

A balun is a type of electrical transformer that can convert electrical signals that are balanced to signals that are unbalanced and vice versa. They are also used to change impedance of twisted pair's 120 ohm to coaxial's 75 ohm. An E1 balun's function is generally to convert an E1 carrier signal from coaxial cable to UTP CAT-5 cable.

Features

- Converts between 75 ohm coax and 120 ohm twisted pair for E1 (2048Kbps)
- Easy to install
- No power required
- Small, light-weight Balun
- Works in either direction
- Works for balanced and unbalanced E1

Data rate	2048Kbps
Unbalanced interface	75 ohm impedance, 2xBNC
Balanced interface	120 ohm impedance, 1xRJ-45
Dimensions	Balun-B2/S , Balun-B2/S-2 4.4 x 5.4 x 2.5cm (W x D x H) Balun-B1 2.2 x 5.6 x 2.1cm (W x D x H) Balun-P/S , Balun-P/S-2 2.2cm x 22.4cm x 2.1cm
Weight	Balun-B2/S , Baluln-B2/S-2 35g Balun-B1 65g Balun-P/S , Balun-P/S-2 45g
Compliance	ITU G.703 standard pulse

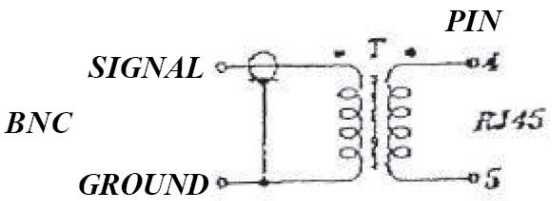

PIN Assignment for Balun-B1

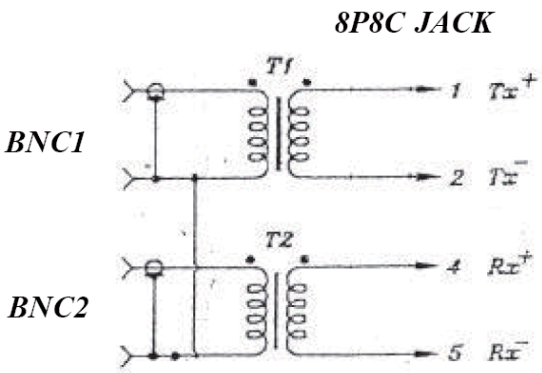

PIN Assignment for Balun-P & Balun-B2

Ordering Information

Balun- □□□□□ Model type

P/S : two BNC pigtail type
B1/S : one BNC box type
B2/S : two BNC box type

Example: Balun-B1/S

G.703 Mini Balun

BLN-3010

A balun is a type of electrical transformer that can convert electrical signals that are balanced to signals that are unbalanced and vice versa. They are also used to change impedance of twisted pair's 120 ohm to coaxial's 75 ohm. An E1 balun's function is generally to convert an E1 carrier signal from coaxial cable to UTP CAT-5 cable. The BLN4010 is miniature Baluns designed for applications where space is restricted due to small dimensions or high densities. The fully shielded design intended for panel mounting and IDC twisted pair termination are available in either standard BNC or 1.6/5.6 jack unbalanced connectors

Features

- Converts between 75 ohm coax and 120 ohm twisted pair for E1(2048Kbps)
- Works in either direction
- Body parts plated with minimum 5u Ni(Nickel)
- Contacts plated with minimum 1.25u Ni(Nickel) and 1.25uAu(Gold)
- Coax connectors with BeCu spring contacts and Teflon insulators
- Coaxial connector insertion cycle > 500
- IDC contacts Phosphor Bronze
- IDC connect/disconnect cycle > 20
- IDC to suit 24.26.28 AWG Copper wire
- Integrated cable anchor allows cable to be inserted after termination on IDC

Data rate	2048Kbps
Unbalanced interface	75 ohm impedance, 1xBNC or 1x 1.6/5.6 Jack
Balanced interface	120 ohm impedance, IDC
Dimensions	1.7cm x 1.6cm x 4.8cm
Weight	15g
Compliance	ITU G.703 standard pulse

BLN-3010 : *1.6 / 5.6 Jack to Krone IDC*

BLN-5010 : *BT43 to Krone IDC*

BLN-4010 : *BNC to Krone IDC*

BLN-6010 : *SMZ to Krone IDC*

Ordering Information

Balun- □□□□□ Model type

3010 : 1.6/5.6 Jack to IDC
4010 : BNC to IDC
5010 : BT43 to IDC
6010 : SMZ to IDC

Example: BLN-3010

G703 Balun Patch Panel

BP20

The CCITT G.703 Balun panel matches multiple sets of dual 75 ohm coax connections to multiple 120 ohm twisted pair connections. Supporting data stream to three speed rates, 2-8 Mbps for E1/T1 and E2/T2, 2-8-34 Mbps for E1/T1 to E3, 34 to 155 Mbps for E3 and higher, the patch panel bi-directionally match, not only signal impedance, but also the pulse shapes of the signals according to the CCITT G.703 standard. The modular construction allows up to 16 separate G.703 Balun Modules in a 19" rack mountable chassis. This modular provides a cost-effective solution and can be purchased separately.

Features

- Connects 75 ohm dual coax to 120 ohm twisted pair
- Mounts in standard 19" Rack
- No AC power or batteries needed
- Link-to data isolation: Mini. 250V
- Bi-directional signal conversion
- Oerating temperature 0 ~ 75
- Typical distance: 180m via Cat.5e cable

Specification

2 ~ 8 Mbit/s speed version for E1 (T1), E2 (T2) data streams

Impedance: 75 ohm to 120 ohm/100 ohm
Insertion loss: Max. 0.2dB (2Mbps); Max. 0.3dB (8Mbps)
Return loss: -29dB(2Mpbs); -21dB(8Mpbs)
Cross talk: better than -80dB from 0.1 to 12MHz between any 2 baluns mounted distance up to 15mm

2 ~ 34 Mbit/s speed version for E1 (T1) to E3 (T3) data streams

Impedance: 75 ohm to 120 ohm/100 ohm
Insertion loss: Max. 0.3dB (8Mbps); Max. 0.9dB from 0.2-70MHz
Return loss: -21B(8Mbs); -15dB from 1 to 70 MHz
Cross talk: better than -60dB from 1MHz to 70MHz between any 2 baluns mounted distance up to 15mm

34 ~ 155 Mbit/s speed version for E3 (T3) and higher data streams

Impedance: 75 ohm to 120 ohm/100 ohm
Insertion loss: Max. 0.8dB from 860 KHz to 52 MHZ Max. 1.5dB from 50KHz to 240 MHz
Return loss: Max. 15dB from 1MHz to 240 MHz

Cross talk: *-80dB from 1MHz to 240MH*

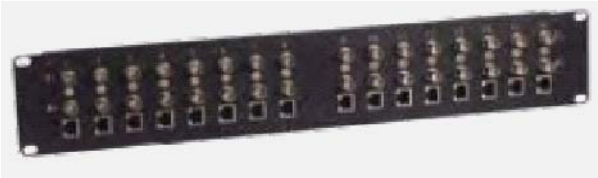

16 port G703 patch panel

1-port G703 balun module

Ordering Information

BP20- □□□□□ Model type

CH16 : 16-port G703 patch panel, Female BNC to STP RJ45 on the same side
M01 : 1-port G.703 Balun module, Female BNC to STP RJ45 on the same side

Example: BP20-CH16

V35 Surge Protector

SP-V35-01

The SP-V35-01, V.35 Data Line Surge protector, prevents damage to V.35 data ports and data errors due to electrical surges. These surges originate from a wide variety of sources, including lightning strikes, static charge buildup, electric motors, florescent lights or the normal AC power protection equipment. Data line transients can be damaging to V.35 hardware. The surge protector intercepts harmful data line transients and diverts them safely to chassis ground through a braided metal strap.

The SP-V35-S01 plugs directly into an M/34 data port. All standard data, clocking and control signals on the ITU-T V.35 interface are protected. The SP-V35-S01 uses sophisticated circuits, which allow the unit to operate at the data rates up to 10 Mbps. The SP-V35-S01 can take repeated surge "hits" without degrading in performance or letting harmful energy through to the data port.

Features

- Standard V.35 data Lines on the M/34 cable adapter
- Data Rates up to 10 Mbps
- Plugs Directly into V.35 Port (One Male, One Female M/34 cable adapter)
- Diverts Harmful Transients to Chassis Ground through Braided Metal Strap
- Able to take Repeated Surges without Degrading in Performance
- Prevents equipment in Case of a Severe Surge
- Surge Handling Capacity of 1,500 Watts

Interface	V.35
Maximum Data Rate	10 Mbps
Connectors	(1) 34-pin M-block male (2) 34-Pin M-block female
Leads/Signals Protected	All V.35 leads/signals
Maximum Capacitance	Less than 40 pF
Response Time	Less than 10 ns
Maximum Surge Protection (Current, 8 x 20 μs at Standard Clamp Voltage)	370 amps
Standard Clamp Voltage	30 volts
Series Resistance	None
Temperature	- 40°C ~ 85°C
Humidity	10 ~ 90% relative, non-condensing
Demission	120 x 52 x 30mm (D x W x H) plus 50 cm of cable(fully extended) on either side for a total length 70 cm
Weight	300g

Ordering Information

SP-V35-01 V.35 Surge protector

E1 Surge Protector

SP-SE-B01

A surge protector is an appliance designed to protect electrical devices from voltage spikes. A surge protector attempts to regulate the voltage supplied to an electric device by either blocking or by shorting to ground voltages above a safe threshold. The SP-SE-B01 will ensure the reliable operation of coaxial based networking equipment running ArcNet, Satellite/CCTV and 75 ohm E1 communication systems.

Features

- Protect E1 Access Units using coaxial cable from transient surge voltages
- Compact in-line installation
- Low shunt capacitance to reduce signal loss
- Maximum system up time
- State of the art, avalanche diode technology

Type	SP-SE-B01
Connection	BNC
Un	10V
U-max	18V
Discharge current	10KA
Response time	< 10ns
Insertion loss (40MHz)	0.5dB
Dimensions	38 x 68 x 27mm (D x W x H)
Weight	70g
Compliance	IEC 61644-1, draft 98

Ordering Information

SP-SE-B01 E1 Surge protector

4-wire Ethernet surge protector

SP-ETH-01

SP-001

A surge protector is an appliance designed to protect electrical devices from voltage spikes. A surge protector attempts to regulate the voltage supplied to an electric device by either blocking or by shorting to ground voltages above a safe threshold. The SP-ETH-01 will ensure the reliable operation of RJ-45 twisted pair based networking equipment running Ethernet. Single unit and rack mountable surge protectors are both available.

Features

- Ethernet 10/100Base-TX Data line protection
- Fast energy absorption when over-voltage occurs
- Low series resistance and minimal capacitance values to preserve the data information

Un	5V
Uc	6.8V
Isn (discharge current)	2.5KA
Imax	5KA
Ures	<30V
tA (Response time)	< 1ns
Protected Cores	SP-ETH-01: 4 pins SP-ETH-08: 8 pins SP-ETH-16: 8 pins SP-ETH-24: In: 8 pins
Attenuation in dB	<0.5dB (100MHz)
Series Capacity	40PF
Dimensions	SP-ETH-01: 85 x 55 x 24 mm SP-ETH-08: 73 x 143 x 44mm SP-ETH-16: 73 x 480 x 44mm SP-ETH-24: 73 x 480 x 44mm
Weight	SP-ETH-01: 75g SP-ETH-08: 435g SP-ETH-16: 1380g SP-ETH-24: 1400g
Certification	IEC 61644-1

Ordering Information

SP-□□□□□ Model type

ETH-01 : 1port 10/100TX
ETH-08 : 8port 10/100TX
ETH-16 : 16port 10/100TX
ETH-24 : 24port 10/100TX

Example: SP-ETH-01

Telephone, FAX or Dialup Modem Surge Protector

TSP-10

A surge protector is an appliance designed to protect electrical devices from voltage spikes. A surge protector attempts to regulate the voltage supplied to an electric device by either blocking or by shorting to ground voltages above a safe threshold. The TSP-10 will ensure the reliable operation of POTS based equipment such as telephones, FAX machines and dialup modems.

Features

- Protect FAX and dialup modems from surges on telephone lines
- Control transient over voltage to a low level to ensure maximum protection for your equipment
- LED indicator flashes for ring indication and lights during device off-look operation
- Meet UL 1449

Surge current	8 x 20u sec of 500A
DC spark over voltage	160 ~ 240VDC
Dimensions	80 x 30 x 27mm (D x W x H)
Weight	20g
Compliance	UL 1449 (2nd Edition)

Ordering Information

TSP-10 Telephone, FAX, Dialup modem Surge Protector

Chapter 4.

IP Networking

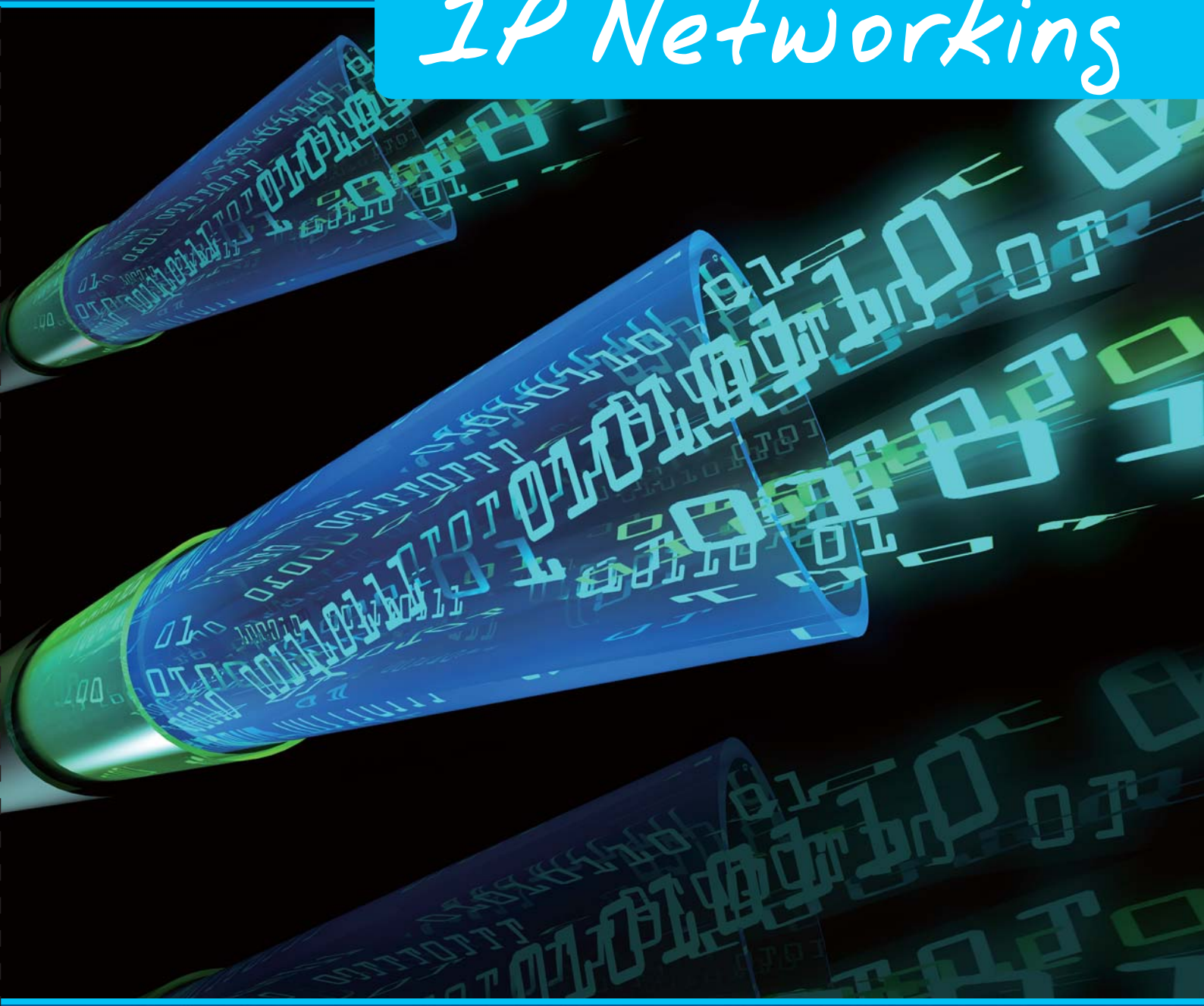

Ethernet Bridge

Ethernet over Coax

Ethernet over E1

Ethernet over unframed E1 w/SNMP

Eoe1A

The EOE1-A is a Channel Service Unit for unframed ITU-T G.703 E1 that features a built-in Ethernet bridge. The CSU has a built-in Network Terminating Unit (NTU) and may connect to either 75 Ohm unbalanced, BNC connectors or to 120 Ohm balanced, unframed E1 via twisted pairs and a shielded RJ-45 connector. The EOE1-A Ethernet Bridge uses HDLC encapsulation to transport Ethernet packets across the WAN and supports 10/100 auto-negotiation or manual settings for 10M, 100M, Full or Half Duplex Ethernet. The Ethernet port also supports a standard auto-MDIX feature that will completely eliminate Ethernet cross-over cables or the guessing that is sometimes involved in choosing a cable when connecting to a HUB or a PC. The EOE1-A is very easy to configure by a menu driven serial console interface. SNMP and proprietary MIB add the ability to manage the EOE1-A centrally through third party network management software or via CTC Union's EMS management system.

Features

- Supports 10/100Base-TX Ethernet over Unframed E1
- Automatic address learning, aging and deletion after 5 minutes
- Auto padding of undersized packets to meet the minimum Ethernet packet size requirement
- Buffering modes can be selected according to the setting of WAN and LAN line speeds
- Forwarding and filtering rate at WAN speed with throughput latency of 1 frame
- Auto MDI / MDIX
- Real-time filtering with 256 MAC address table
- Supports Console, Telnet, SNMP and Web management

G.703 E1 Specifications	Framing	Unframed
	Line code	AMI/ HDB3
	Bit rate	2.048Mbps (clear channel)
	Relative receive level	0 to -43dB
	Transmit level	
	Pulse	Nominal 2.37V ±10% for 75ohm
	Amplitude	Nominal 3.00V ±10% for 120ohm Zero amplitude ±0.1V
	Jitter performance	According to ITU-T G.823
	Connector	BNC(unbalanced), RJ-48(balanced)
	Clock modes	
	Clock mode 0 (DCE1)	Receive & transmit clock (recovered) to the sync. DTE
	Clock mode 1 (DCE2)	Receive & transmit clock (internal oscillator) to the sync. DTE
	Test Switches	Digital local loopback, Analog local
	Diagnostics	Digital local and remote loopback, Analog local loopback, Test pattern
Ethernet Specifications	Connector	RJ-45
	Data Rate	10/100Mbps; Half Duplex / 20/ 200Mbps; Full duplex
	Filtering & Forwarding	90,000 packets/sec
	Delay	1 frame
	Frame Buffer	340 frames
	MAC Table	256 MAC address
	Protocol	Synchronous HDLC
Indications		LEDs (Power, Signal Loss, Alarm, Link, TD, RD, 100, Full,Error, Error, Test)
Standard		ITU-T G.703, G.706 and G.732 IEEE 802.3/802.3u
Management		Console, Telnet, Web, SNMP
Power Input		AC: 90-250VAC ; DC: 18-72 VCD
Power Consumption		20W
Dimensions		250 x 195 x 45mm (D x W x H)
Weight		1.5kg
Temperature		0 ~ 50°C (Operating), -10 ~ 70°C (Storage)
Humidity		10~90% non-condensing
Certification		CE, FCC, RoHS
MTBF		57,000 hrs (25°C)

Managed Unframed E1 P to P Application

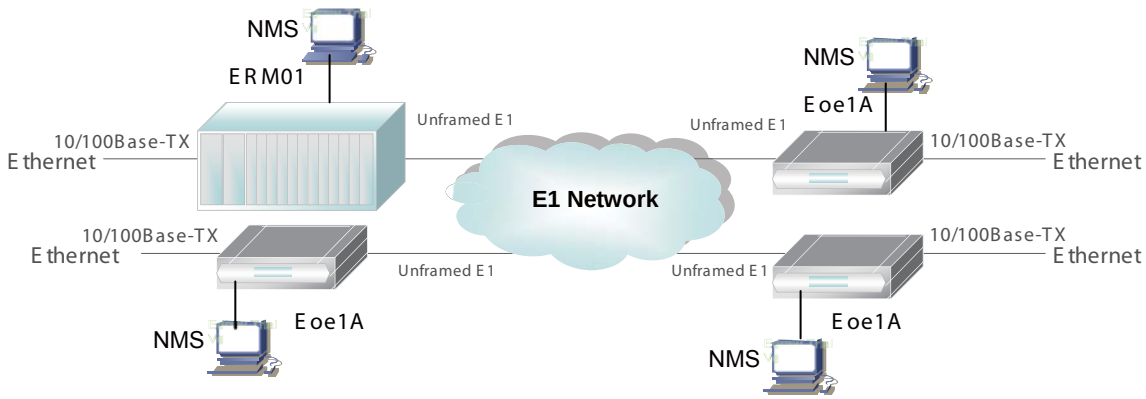

Ordering Information

Eoe1A- □□□□□ Power type

AC
DC

Example: Eoe1A-AC

Ethernet over unframed E1

Eoe1

The Eoe1 is a Channel Service Unit for unframed ITU-T G.703 E1 that features a built-in Ethernet bridge. The CSU has a built-in Network Terminating Unit (NTU) and may connect to either 75 Ohm unbalanced, BNC connectors or to 120 Ohm balanced, unframed E1 via twisted pairs and a shielded RJ-45 connector. The Eoe1 Ethernet Bridge uses HDLC encapsulation to transport Ethernet packets across the WAN and supports 10/100 auto-negotiation or manual settings for 10M, 100M, Full or Half Duplex Ethernet. The Ethernet port also supports a standard auto-MDIX feature that will completely eliminate Ethernet cross-over cables or the guessing that is sometimes involved in choosing a cable when connecting to a HUB or a PC. The Eoe1 is very easy to configure by DIP switch setting

Features

- Supports 10/100Base-TX Ethernet over Unframed E1
- Automatic address learning, aging and deletion after 5 minutes
- Auto padding of undersized packets to meet the minimum Ethernet packet size requirement
- Buffering modes can be selected according to the setting of WAN and LAN line speeds
- Forwarding and filtering rate at WAN speed with throughput latency of 1 frame
- Auto MDI / MDIX
- Real-time filtering with 256 MAC address table

G.703 E1 Specifications	Framing: Unframed Line code: AMI/ HDB3 Bit rate: 2.048Mbps (clear channel) Relative receive level: 0 to -43dB Transmit level Pulse: Nominal 2.37V ±10% for 75ohm Amplitude: Nominal 3.00V ±10% for 120ohm Zero amplitude ±0.1V Jitter performance: According to ITU-T G.823 Connector: BNC(unbalanced), RJ-48(balanced) Clock modes Clock mode 0 (DCE1): Receive & transmit clock (recovered) to the sync. DTE Clock mode 1 (DCE2): Receive & transmit clock (internal oscillator) to the sync. DTE Control signals: CTS constantly ON DSR constantly ON, except during test loops DCD constantly ON or follows RTS, except during signal loss Test Switches: Digital local loopback, Analog local Diagnostics: Digital local and remote loopback, Analog local loopback, Test pattern
Ethernet Specifications	Connector: RJ-45 Data Rate: 10/100Mbps; Half Duplex / 20/ 200Mbps; Full duplex Filtering & Forwarding: 90,000 packets/sec Delay: 1 frame Frame Buffer: 340 frames MAC Table: 256 MAC address Protocol: Synchronous HDLC
Indications	LEDs (Power, Signal Loss, Alarm, Link, TD, RD, 100, Full,Error, Error, Test)
Standard	ITU-T G.703, G.706 and G.732 IEEE 802.3/802.3u
Management	Console, Telnet, Web, SNMP
Power Input	AC: 90-250VAC ; DC: 18-72 VCD
Power Consumption	20W
Dimensions	250 x 195 x 45mm (D x W x H)
Weight	1.5kg
Temperature	0 ~ 50°C (Operating), -10 ~ 70°C (Storage)
Humidity	10~90% non-condensing
Certification	CE, FCC, RoHS
MTBF	57,000 hrs (25°C)

Unframed E1 P to P Application

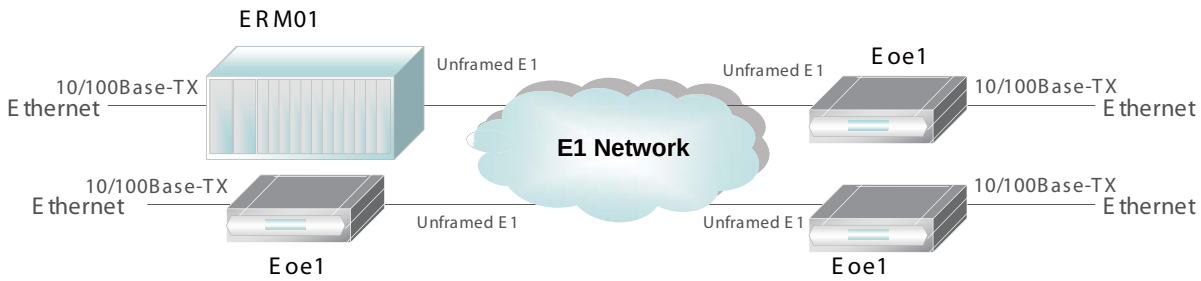

Ordering Information

Eoe1- □□□□□ Power type

AC
DC

Example: Eoe1-AC

Unmanaged Ethernet extender over coaxial cable modem

EOC-10

The EOC-10 is point-to-point and point-to-multipoint EoCNA (Ethernet over Coax Network Alliance) solution that efficiently extends 10/100 Ethernet circuits up to 900 meters (2,952feet) at full Fast Ethernet speed using existing coaxial cable. The EOC-10 will allow Ethernet connectivity in existing facilities or homes without pulling extra cable. This is perfect solution for Ethernet on the factory floor where systems have been upgraded from slower serial communication to Ethernet networking. Installation is easy with absolutely no settings required. The EOC-10 is used in Coaxial cable systems to extend Ethernet connectivity over existing CCD/CATV grade Coaxial cable. The EOC-10 works by sharing the same cable with CATV signals, without interference to the existing CATV signals.

Features

- Extends LAN connectivity using existing coaxial cable
- Transmits CATV and Ethernet over the same coaxial cable
- 112Mbps (PHY speed) @ 900 meters (2,952feet)
- 32Mbps (PHY speed) @ 1.2Km (4,000feet)
- Supports point to point and point to multi-point up to 32 nodes over tap/splitter
- Asymmetrical using EoCNA standard
- Operates transparently to high layer protocols such as TCP/IP
- Auto MDI / MDIX
- Auto negotiation
- Plug and Play, no configuration required
- Status LEDs for simple monitoring

Interface	Fast Ethernet Interface 10/100 Mbps, RJ45 Coax Interface Two F-Type Female Coax Connectors, One for EoCNA, the other for TV Protocol Transparent to higher layer protocols Transmission Power and Spectrum 8 ±1 dBm, 12~28 MHz Physical layer transmission speed and distance Up to 112Mbps@900 meters Up to 32Mbps @ 1.2Km (-176dBm/Hz Noise Floor)
Indications	LEDs (PWR, LAN Link/Act, Coax Link/Act, Coax Sync)
Standard	ITU G.9954, IEEE802.3, IEEE802.3u, IEEE802.3x
Power Input	DC 5V (via AC switching adapter)
Power Consumption	6W
Dimensions	83 x 138 x28mm (D x W x H)
Weight	330g
Temperature	0 ~ 50°C (Operating), -10~70°C (Storage)
Humidity	10~90% non-condensing
Certification	CE, FCC, RoHS
MTBF	57,000 hrs (25°C)

Ethernet / CATV over coax application

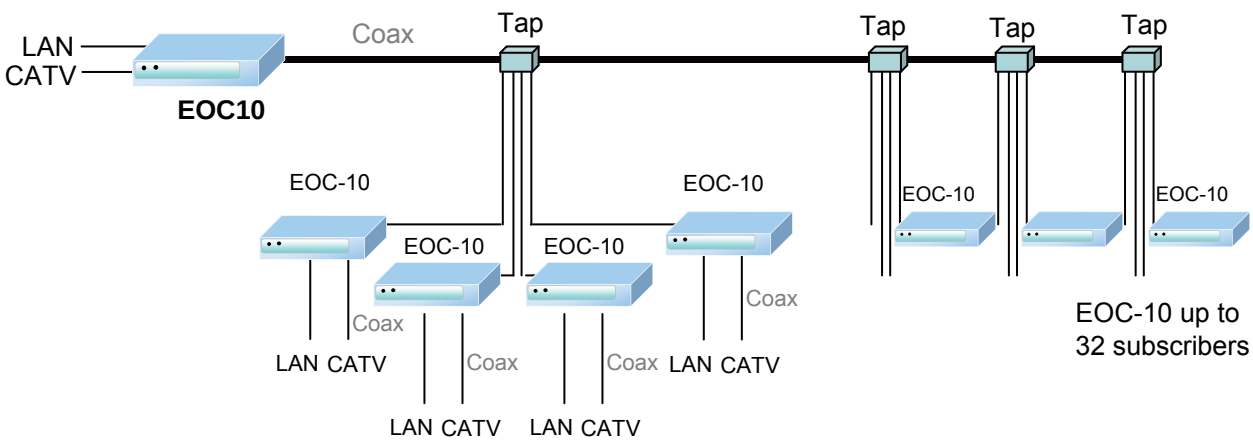

Ordering Information

EOC-10

Managed Ethernet extender over coaxial cable (CO/CPE modem)

EOC-20, EOC-21

The EOC-20/21 is a point-to-multipoint EoCNA (Ethernet over Coax Network Alliance) solution that efficiently extends 10/100 Ethernet circuits up to 900 meters (2,952feet) at full Fast Ethernet speed using existing coaxial cable. The EOC-20 is a master unit which acts as a bridge and distributes bandwidth to up to 32 EOC-21 subscriber units in a fashion similar to time division multiplexing. The EOC-21 is actually where all the packet processing takes place. At the heart of this device is a 6 port L2/3/4 switching gateway controller. By placing all the management in the cpe units, Multi-Service Operators can guarantee that no single client will be able to hog all of the EoCNA bandwidth and effect other customer's service. This allows deployment of triple-play applications where quality of service must be maintained. The EOC-20/21 works by sharing the same cable with CATV signals, without interference to the existing CATV signals.

Features

- Extends LAN connectivity using existing coaxial cable
- Transmits CATV and Ethernet over the same coaxial cable
- Supports VLAN tag and port, QOS, bandwidth control, auto-provisioning via TFTP
- Supports Web, Telnet and SNMP management
- Two (2) Ethernet ports, one for STB (Set Top Box), one for LAN
- 112Mbps @ 900 meters (2,952feet) reach
- 32Mbps @ 1.2Km (4,000feet)
- Supports point to point and point to multi-point with up to 32 nodes over tap/splitter
- Asymmetrical using EoCNA standard
- Operates transparently to high layer protocols such as TCP/IP
- Auto MDI / MDIX
- Auto negotiation
- Status LEDs for simple monitoring

Interface	Fast Ethernet Interface 10/100 Mbps, RJ45 Coax Interface Two F-Type Female Coax Connectors，One for EoCNA，the other for TV Protocol Transparent to higher layer protocols Transmission Power and Spectrum 8 ±1 dBm, 12~28 MHz Physical layer transmission speed and distance 160Mbps maximum speed Up to 112Mbps @ 900 meters Up to 32Mbps @ 1.2Km (-176dBm/Hz Noise Floor)
Quality of Service	Priority Based on IEEE802.1p and TCP/UDP port Priority Based on 802.1Q Tag Guaranteed QoS based on Layer II Parameterized QoS
Management	Diagnostic EoCNA function Secured/Isolated Communication between devices Provision/Denial of Service CPE profile download provision & SNMP read/write & Web Manager setting DHCP snooping DHCP Option 82 support DHCP session manager NetBIOS filtering ARP support Port Rate limit function for HCNA port or Port Based
Indications	EOC20: PWR, LAN Link/Act, STB Link/Act, Coax Link/Act, Coax Sync EOC21: PWR, Alarm, Sys, LAN Link/Act, STB Link/Act, Coax Link/Act, Coax Sync
Standard	ITU G.9954, IEEE802.3, IEEE802.3u, IEEE802.3x, IEEE802.1Q, IEEE802.1p, IGMPv1/v2
Power Input	5VDC (via AC switching adapter)
Power Consumption	6W
Dimensions	83 x 138 x28mm (D x W x H)
Weight	330g
Temperature	0~50°C (Operating), -10~70°C (Storage)
Humidity	10~90% non-condensing
Certification	CE, FCC, RoHS
MTBF	35,000 hrs (25°C)

Ethernet / CATV over Coax application

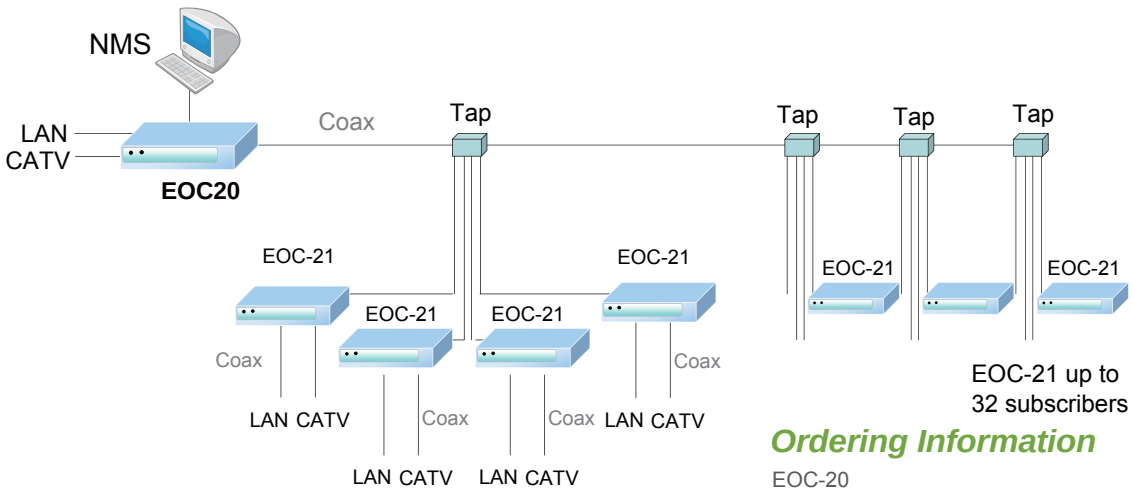

Ordering Information

EOC-20
EOC-21

Ethernet to WAN (V.35, RS530, RS449, X.21) bridge

ET100

The ET100 Network Bridge is a high performance remote, self-learning, Ethernet bridge. Its compact size and low cost makes it ideal for cost-sensitive bridging applications, or as a LAN extender or segmenter over bit stream type infrastructures. The built-in n x 64(56)Kbps timing clock generator makes it easy to connect to other n x 64(56)Kbps related data equipment. Several options of data interfaces, including V.35, RS-530, RS-449, X.21 and RS-232, make this unit's connection between 10Base-T or 100Base-TX LAN and various data port interfaces convenient.

Features

- High performance bridge for 10Base-T or 100Base-TX Ethernet extension
- Auto MDI/MDIX
- Selectable data port : V.35, X.21, RS530, RS449, RS232
- Transparent half / Full duplex support on WAN, LAN interface
- Nx64, Nx56 timing clock generator for Sync WAN link
- LEDs indication for LAN, WAN status

Interface	WAN Interface Interface : Selectable RS232(Sync), V.35, RS530/449, X.21 Protocol : Synchronous HDLC (ISO 13239) Connector : DB25M Type : DTE port Data rate: • RS232 up to 128Kbps • V35, X21, RS530, RS449 up to 2Mbps • Nx64(56)Kbps up to 2048Kbps Clock source : Tx/Rx internal or external LAN Interface • Compliant with IEEE 802.3, 802.3u • Connector: RJ45 • Speeds: 10/100Base-TX, Full/Half duplex • Frames: Support 64 ~ 1522 byte packet lengths Bridge Specifications • Protocol: Synchronous HDLC (ISO 13239) • Address learning, aging and deletion after 5 minutes • 256 addresses MAC table • 340 packet buffer
Indications	LEDs (PWR, WAN Rx/Tx, LAN Tx/Rx/Link/Err/Speed)
Standard	IEEE802.3, 802.3u
Power Input	9VDC
Power Consumption	<5W
Dimensions	135 x 79 x 25mm (D x W x H)
Weight	150g
Temperature	0~50°C (Operating), -10~70°C (Storage)
Humidity	10~90% non-condensing
Certification	CE, FCC, RoHS
MTBF	35,000 hrs (25°C)

Ethernet to Data P2P Application

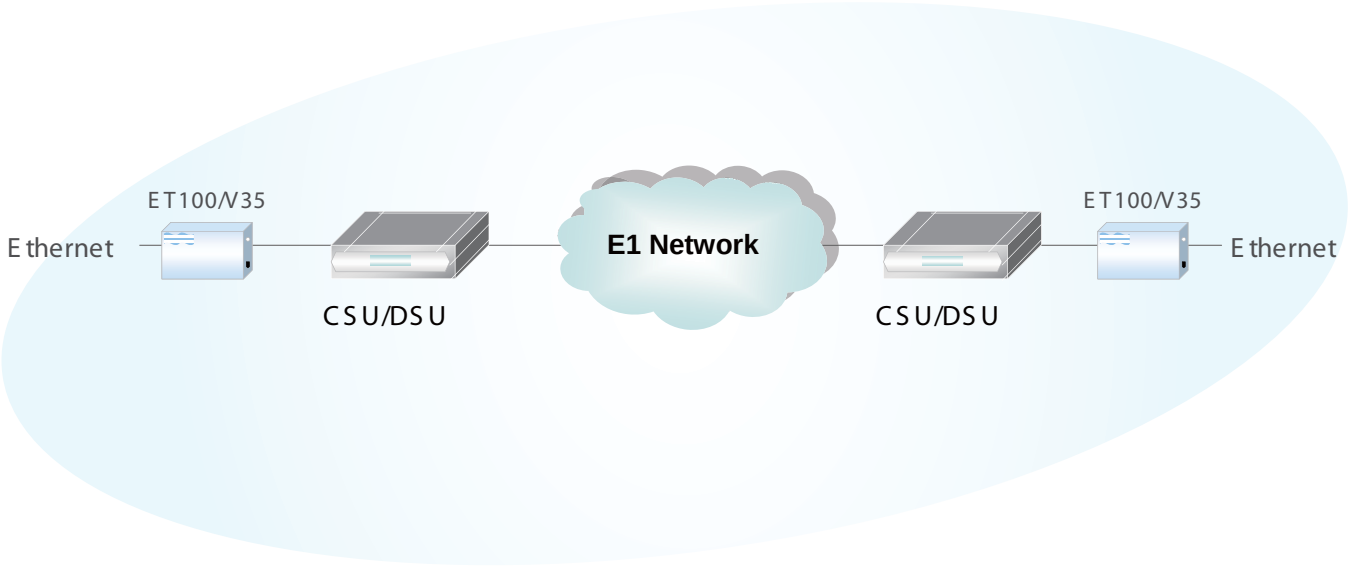

Ordering Information

ET100

Stand-alone Ethernet to NRZ bridge

ET100/NRZ

The ET100/NRZ Network Bridge is a high performance, remote, self-learning Ethernet bridge. Its solid design makes it ideal for cost-sensitive bridging applications, or as a LAN extender or segmenter over NRZ bit stream type infrastructures. Multiple clocking options including a built-in n x 64(56)Kbps timing clock generator makes it easy to connect to other n x 64Kbps NRZ data equipment.

Features

- 10BASE-T/100BASE-TX, Auto, Full Duplex or Half Duplex
- HP Auto-MDI/MDIX detects and corrects crossed cable
- IEEE 802.3x flow control enable/disable
- Real-time filtering with 256 MAC address table
- Automatic address learning, aging and deletion after 5 minutes
- Up to 340 packet-buffering capacity
- Forwarding and filtering rate at wire speed with throughput latency of 1 frame.
- Auto padding of undersized packets to meet the minimum Ethernet packet size requirement
- Buffering modes can be selected according to the setting of WAN and LAN line speeds
- Built-in nx64K / nx56K timing clock generator for WAN link

Ports	WAN Interface Type: Fixed type NRZ Protocol: Synchronous HDLC (ISO 13239) Connector: 4x BNC Data rate: Nx64Kbps, up to 2048Kbps Clock source: Tx/Rx internal or recovery from NRZ LAN Interface • Compliant with IEEE 802.3, 802.3u • Connector: RJ45 • Data rate: Nx64Kbps • Speeds: 10/100Base-TX, Full/Half duplex • Frames: Support 64 ~ 1536 byte packet lengths
Indications	PWR, TD/RD, Link, LAN Rx/Tx, 100M, Full, Err, Test
Standard	IEEE802.3, 802.3u, ISO 13239
Power Input	AC: 100 ~240V, DC 18 ~ 72V
Power Consumption	<15W
Dimensions	235 x 195 x 45mm (D x W x H)
Weight	950g
Temperature	0 ~ 50°C (Operating), -10~70°C (Storage)
Humidity	10 ~ 90% non-condensing
Certification	CE, FCC, RoHS
MTBF	57,000 hrs (25°C)

Ethernet to NRZ P to P Application

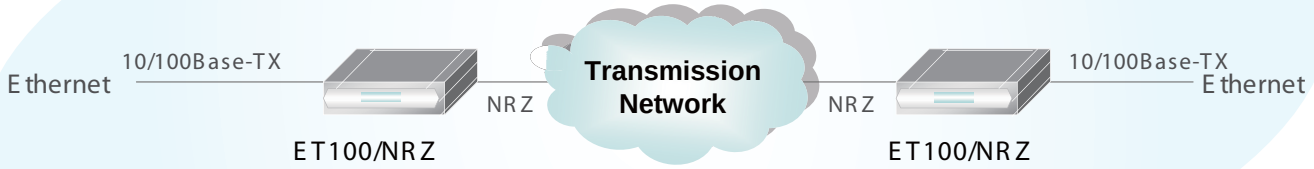

Ordering Information

ET100NRZ □□□□□ Power type

AC
DC

Example: ET100NRZ-AC

Stand-alone Ethernet to G.703 Co-direcctional 64K bridge

ET100/G64

The ET100/G64 Network Bridge is a high performance remote, self-learning, Ethernet bridge. Its compact size and low cost makes it ideal for cost-sensitive bridging applications, or as a LAN extender or segmenter over legacy 64Kbps co-directional bit stream type infrastructures. Multiple clock source settings including a built-in 64Kbps timing clock generator makes it easy to connect to other 64Kbps G.703 co-directional data equipment, making this unit's connection between 10Base-T or 100Base-TX LANs convenient.

Features

- 10/100Base-TX, Full Duplex or Half Duplex
- Auto MDI/MDIX
- IEEE 802.3x flow control
- Real-time filtering with 256 MAC address tabl
- Auto address learning, aging and detection after 5 mins
- up to 340 packet-buffering capacity
- Built-in nx64K / nx56K timing clock generator for WAN link

Interface	WAN Interface Type: Co-directional 64Kbps Line code: Co-directional Line: 4 wires 19 to 26 AWG Range: up to 800 meters over 24 AWG Impedance: 120 ohms Pulse Amplitude: Nominal 1.0V±10% Zero Amplitude: Nominal 0V±0.1V Clock Frequency: ±100ppm Connector: RJ45 Frame format: Unframed LAN Interface • Compliant with IEEE 802.3, 802.3u • Connector: RJ45 • Data rate: 64Kbps • Speeds: 10/100Base-TX, Full/Half duplex • Frames: Support 64 ~ 1536 byte packet lengths Bridge Specifications • Protocol: Synchronous HDLC (ISO 13239) • Address learning, aging and deletion after 5 minutes • 256 addresses MAC table • 340 packet buffer
Indications	PWR, TD/RD, Link, LAN Rx/Tx, 100M, Full, Err, Test
Standard	IEEE802.3, 802.3u, ITU-T G.703, G.823
Power Input	AC: 100 ~240V, DC 18~72V
Power Consumption	<5W
Dimensions	235 x 195 x 45mm (D x W x H)
Weight	950g
Temperature	0 ~ 50°C (Operating), -10 ~ 70°C (Storage)
Humidity	10 ~ 90% non-condensing
Certification	CE, FCC, RoHS
MTBF	57,000 hrs (25°C)

Ethernet to G.703 64Kbps P2P Application

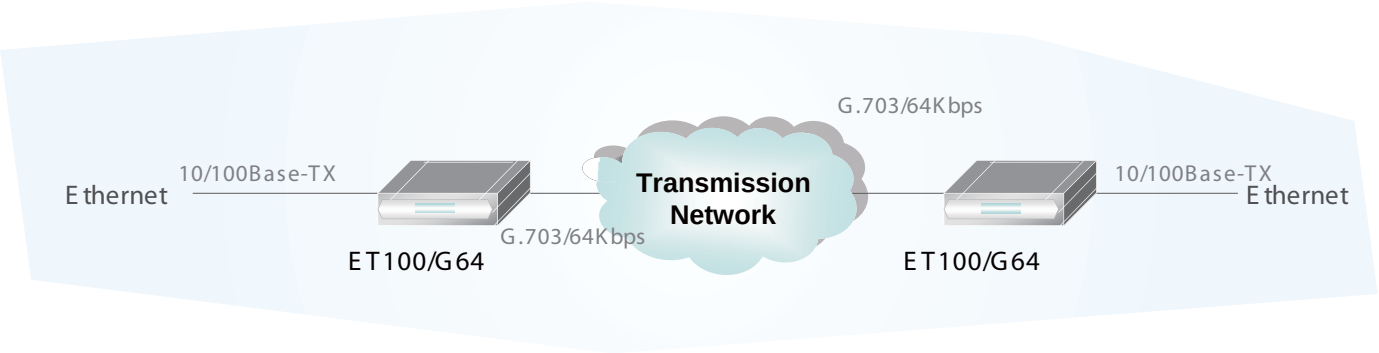

Ordering Information

ET100/G64 □□□□□ Power type

AC
DC

Example: ET100/G64-AC

Chapter 5.

Tester

Optical Power Meters

PCM Analyzer

E1/T1 BERT

OTDR Analyzer

SDH tester

Protocol (SS#7, X.25, HDLC ....) Analyzer

Single Mode Optical Time Domain Reflectometer

OTDR-30A

The OTDR-30A is an OTDR (Optical Time Domain Reflectometer) based optical fault locator and analysis tool for optical fiber networks. The OTDR features a light, compact, hand-held design with an intelligent user interface that is easy and quick to use. The color LCD display with bright backlight make testing work more comfortable and convenient, whether during daylight or in low light conditions. As a fault locating and analyzing tool, the OTDR-30A is much more economical than traditional OTDRs. In addition to its 300 plus internal curve storage, the OTDR-30A can save and transfer the measurement curves data to a PC via serial or USB port for further analysis or printing with Window(r) based "Trace Manager" software. When set in auto measurement mode, the user can activate the measurement operations easily by the push of only one button. The OTDR-30A is ideal for optical fiber installation, maintenance, field construction, and other on-site fault-location analysis.

Dynamic Range	24dB
Wavelength	1310/ 1550 ±20nm
Fiber Type	Single Mode
Optical Connection	Single Port
Emitter Type	LD
Connector Type	FC/PC, SC/PC or ST/PC
Selectable Range	1.3, 2.5, 5, 10, 20, 40, 80 120km
Selectable pulse width	30ns, 100ns, 275ns, 1μs, 2.5μs
Measurement Time	15s, 30s, 1min, 2min, 3min
Attenuation Deadzone	25m
Event Deadzone	10m
Sampling Range	1m ~ 10m
Distance Measure Accuracy	±(1m + 5x10-5 x Distance + sampling space)
Attenuation Detect Accuracy	±0.05dB/ dB
Reflection Detect Accuracy	±4dB
Data Storage	300 test traces
Data Interface	RS-232 and USB port
Power Input	1600mA/ h AC adapter (internal NiMH rechargeable battery)
Environmental	Temperature -10 ~ 50°C (Operating) -20 ~ 65°C (Storage) Humidity 0 ~ 95% non condensing
Dimensions	196 x 100 x 60mm (W x D x H)
Weight	870g

Features

- Auto off function conserves battery energy
- Backlight supports testing work at low light conditions
- Built-in NiMH rechargeable battery supports 5 hours continuous operation
- Dual wavelength capability (1310 & 1550 nm)
- Dust, damp and shock resistant design for field application
- Easy to use, no tedious learning process
- Fast test & color LCD displays all measurement information
- Large memory capacity (300 test curves)
- LCD indicators for battery charge and LD lasing status
- Low battery Indicator
- Lightweight, portable and economical
- RS-232/USB data upload ports
- Trace Manager PC software for previously stored data analysis and reporting

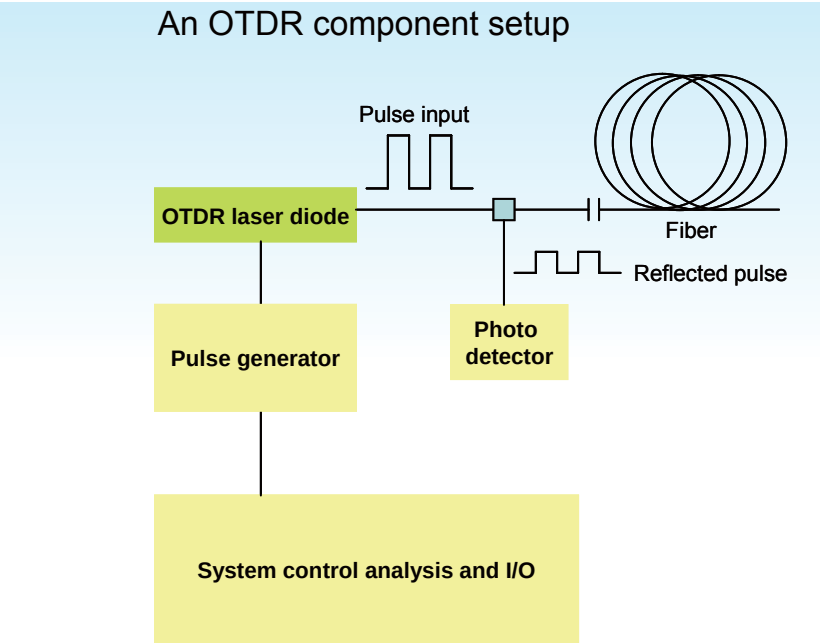

Ordering Information

OTDR- □□□□□ Model type

30A

Example: OTDR-30A

STM-1 and G.703 E1 Analyzer / BERT

HCT-SDH155

The HCT-SDH/155 transmission analyzer is a handheld, graphic color LCD touch screen, SDH/PDH measuring instrument designed use in analysis and maintenance of STM-1(155Mbps) and E1(2.048 Mbps) lines. The HCT-SDH/155 has both optical and electrical por evaluation and analysis of SDH and PDH networks with results displayed according to ITU-T G.821, G.826, G.828, G.829, M.2100 or Its easy operation, light weight, long working time and low price make an ideal solution for field work.

Features

- Displays according to ITU-T G.821/826/828/829 and M.2100/2101
- Tandem Connection Monitoring (TCM) and APid tests
- Supports pointer adjustment test
- Automatic Protection Switching (APS)
- Round trip delay measurement (STM-1 and E1)
- Scan VC4, VC3, VC12 tributary signals
- Firmware update through USB
- Operates by key-press or touch screen

- Maintenance Telecom
- Maintenance CATV
- Test Lab of Fiber Optic
- Other Fiber Optical Measurement

Ports	Electric port：BNC, unbalanced Optic port : SFP-LC (1310nm, 1550nm) Frequency offset: ±99 ppm, 1ppm per step Clock sources : Internal, External and Recovery PRBS : 2n-1 (n=9, 11, 15, 20, 23), all "1" or al1 "0" Customer can edit insertion and analyzing overhead SOH : J0, B1, B2, E1, E2, F1, D1, D2, D3, D4, D5, D6, D7, D8, D9, D10, D11, D12, S1, M1 POH : J1, B3, C2, G1, F2, H4, F3, K3, N1, V5, J2, N2, K4 Pointer sequence adjustment according to ITU-T G.783 Monitor alarm and performance according to ITU-T G.783, G.958 SDH：LOS, AIS, OOF, EFAS, LOF, RS/HP/LP TIM, MS/ AU/TU AIS, MS/HP/LP RDI,AU/TU LOP, HP/LP UNQ, TU LOM, HP/LP PLM, RFI MS-/HP-/LP-FERF PDH : LOF, RAI, CRCL, MAIS, CASL, MRAI TCM : UNQ, LTC, RDI, ODI, TIM, AIS From D1 ~ D3, D4 ~ D12, E1, E2, F1 transparent channel, insert/pick-up PRBS ITU-T mappings for SDH, including the concatenated ones SDH Test Mode： SDH Path, SDH Demux, SDH Mux, SDH Monitor, SDH Through PDH Test Mode： PDH Path, PDH Monitor, PDH Through
Standard	ITU-T G.703, G.957, G.783, G.958
Power Input	C12V with AC switching adapter
Dimensions	100 x 196 x 60mm (W x D x H)
Weight	870g
Temperature	0°C ~ 50°C (Operating), 0°C ~ 70°C (Storage)
Humidity	10 ~ 90% non-condensing
MTBF	30,000 hrs (25°C)

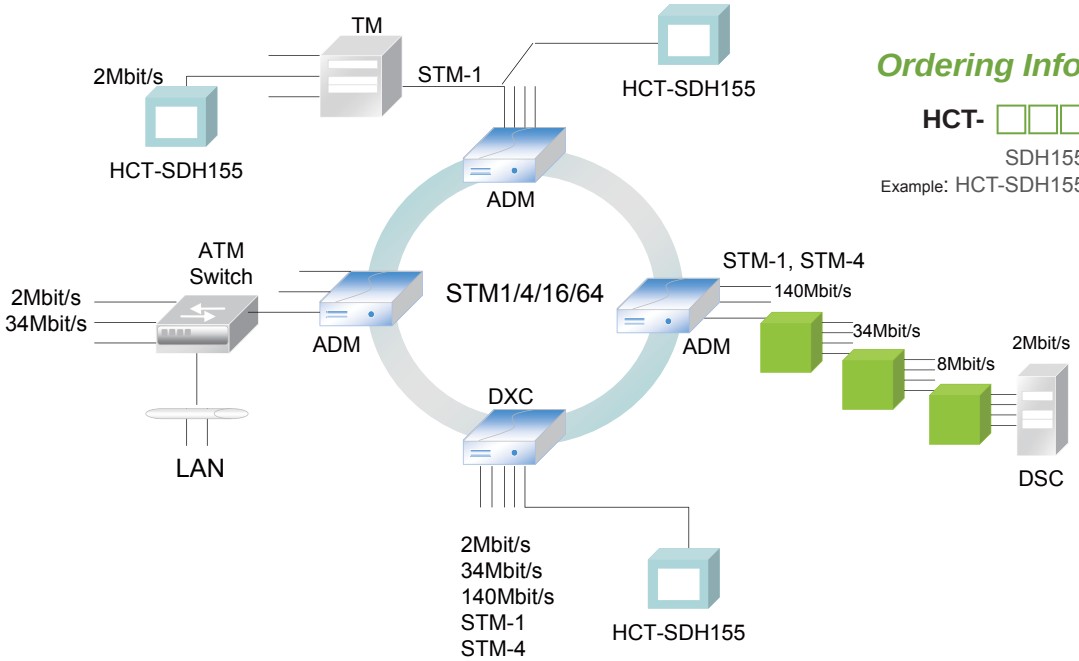

Ordering Information

HCT- □□□□□ Model type

SDH155

Example: HCT-SDH155

Optical Power Meter

OPM-300A/B

The OPM-300 is a handheld optical power meter (OPM) device used to measure the absolute or relative power of an optical signal. The OPM-300 consists of a calibrated sensor and display. The sensor consists of a photodiode that operates in the desired range of wavelengths. On the unit, measured optical power is shown and appropriate wave length is displayed. This ingenious device has a wide range of power measurements with high precision.

Features

- User self recalibration function
- Large LCD display and optional backlight
- Displays optical power in mw, dB and dBm
- Absolute and relative power measurement
- Quick response, without warm-up time
- Moisture, dust and water resistant design
- Low battery consumption (more than 240 hours continuous operation on three alkaline batteries)
- Optional 10 minutes auto shutoff function

Ports	Wavelength: 800~1650nm Calibrated Wavelength: 800, 980, 1300, 1310, 1550nm Measure Range: OPM-300A -70~ +3dBm OPM-300B -50 ~ +26dBm Data Interface: RS-232 Detector Type: InGaAs Range of Use: Single/ Multiple mode fiber Accuracy: ±0.25dB (5%) @25°C & -10dBm Resolution: 0.01dB Connector: FC/ PC (Interchangeable SC, ST)
Power Input	1.5V AA Battery
Dimensions	74x 152 x 26mm (W x D x H)
Weight	200g
Temperature	0°C ~ 50°C (Operating), -10°C ~ 70°C (Storage)
Humidity	10 ~ 90% non-condensing
Certification	CE, FCC
MTBF	30,000 hrs (25°C)

Ordering Information

OPM- □□□□□ Model type

300A
300B

Example: OPM-300A

Optical Light Source

OLS-100

The OLS-100 is an Optical Light Source that can be used in conjunction with our OPM-300 Optical Power Meter to test installed fiber cabling for attenuation loss over medium to long distances. The OLS-100 can provide 1 to 4 wavelength outputs according to the specific requirements including 650nm visible red source, 1310/1550nm wavelength for single mode fiber and 850/1300nm wavelength for multimode fiber. Together with any optical power meter, it acts as a perfect solution for confirming or troubleshooting an optical fiber network.

Features

- Compact size
- Highly stable output power
- More than 45 hours working battery life
- Large LCD display
- Easy operation

Model	OLS-100			
Wavelengths(nm)	650	1310/1550	850/1300	More wavelengths can be optional the maximum can be four wav
Emitter Type	FP-LD			
Output Power(dBm)	0	-7	-20	Other emitted can be optional
Spectral Width(nm)	≤10			
Output Stability	± 0.05dB/15mins; ± 0.1dB/ 8hours			
Modulation Frequencies	CW,2Hz	CW,270Hz,1KHz,2KHz		
Optical Connector	FC universal adaptor	FC/PC		
Power Supply	Alkaline Battery(3 AA 1.5V batteries)			
Operating Temperature	-10(°C) ~ +60(°C)			
Storage Temperature	-25(°C) ~ +70(°C)			
Dimension	152 X 74 X 26mm (W x D x H)			
Weight	180g			

Ordering Information

OLS- □□□□□ Model type

100

Example: OLS-100

Network Tester Series Comparison Chart

Features	Model		HCT-6000A	HCT-6000	HCT-7000	BTM-10	HCT-BERT/H	HCT-BERT/C
Photo	Function Description							
LCD Display	8 lines, 32 characters per line		▲	▲		▲	▲	
	30 lines x 40 characters per line				▲			
	TFT Color Screen							▲
Interface	Type		Fixed	Fixed	Modular	Fixed	Fixed	Fixed
	Datacom (RS232, V35, X21, RS449/530		▲	▲	▲	•	▲	▲
	E1				▲	▲	▲	▲
	T1					▲	▲	
	G.703 64K Codirectional					•	•	
Connectors	E1 BNC				▲	▲	▲	▲
	E1/T1 (RJ45/DB15)		DB15	DB15	DB15	DB15	DB15	RJ45
	Datacom (RS232, V35, X21, RS449/530		▲	▲	▲	▲	▲	▲
	External Clock Port					▲	▲	▲
	USB Port (data upload to PC)							▲
	RS232 (remote control)		▲	▲	▲	▲	▲	
	Printing Port (DB15)		▲	▲	▲	▲	▲	▲
Power	DC Jack		DC12V	DC12V	DC19V	DC12V	DC12V	DC9V
	Re-chargeable Battery		▲	▲	▲	▲	▲	▲
Protocols Analysis	Basic	Async, Sync (BSC), SDLC HDLC, X25, Frame Relay (Q.922 only), DDCMP (Async)	▲	▲	▲			
		DDCMP (Sync)	▲	▲	▲			
	PPP/SLIP F/W	Async, SDLC, HDLC, X25, Frame Relay (Q.922 only), PPP(Async), SLIP, PPP(Sync), HDLC+IP , X.25+IP	•	•	•			
	Frame Relay	Q.922 (T1.618)/Q.933(T1.617)	•	•	•			
	SNA		•	•				
	Speeds		128K	128K	2M			
CCS Analysis Common Channel Signaling		SS#7			•	•		
		ISDN-D			•	•		
		V5.1 /V5.2			•	•		
BERT Analysis	Datacom	128K Basic Analysis	▲	▲		▲	▲	▲
		2M Basic Analysis		▲	▲	▲	▲	▲
		2M G.821 Analysis		▲	▲	▲	▲	▲
		2M G.826 Analysis		•				
	E1/T1	Basic Analysis			▲	▲	▲	▲
		G.821/G.826 Analysis			▲	▲	▲	▲
		M.2100 Analysis				•	▲	▲
		Histogram				▲	▲	▲
		MUX			▲			
Control Type	Remote control		▲	▲	▲	▲	▲	
	Auto Configuration		▲	▲	▲	▲	▲	
Data management	Up/Download to PC		▲	▲				▲
	Fiber manager		▲	▲	▲	▲	▲	▲
Number of Test Ports			1	1	2	1	1	1
Features	Printer port		▲	▲	▲	▲	▲	▲
	On-line monitor to PC		▲	▲				
	Self Test and Diagnostic		▲	▲	▲	▲	▲	▲
	Async Terminal / Async Scan		▲	▲	▲			
	Round Trip Delay Measurement				▲	▲		▲
	SLIP Measurement				▲	▲		
	Datacom Clock Measurement				▲	▲		
	Signal Result Frequency Measurement				▲	▲	▲	▲
	Signal Result Level Measurement					▲		
	External Drop and Insert (DSU/CSU)				▲	▲		
	Alarm / Looping Setting and monitor				▲	▲	▲	▲
	Signaling/Timeslot setting and display				▲	▲	▲	▲
	User program patterns setting				▲	▲	▲	▲
	SA Bit Setting and Display				▲	▲	▲	▲
	Internal Timer & Counters		▲	▲	▲			
	Time Stamp				▲			
	VF Analysis					•		
	Pulse Shape					•		

▲ Denotes available
• Denotes optional

Dual Port E1/T1/Datacom Protocol Analyzer and BER Tester

HCT-7000

I/F Module

The HCT-7000, our flagship tester, is a portable, battery powered E1 and data communication tester, designed for a wide range of protocol analysis and BERT (Bit Error Rate Test) at full E1 speeds (2.048Mbps) and is fully suitable for equipment installations, on-line or off-line diagnostics, debugging, and interface development. The HCT-7000 features a backlit Liquid Crystal Display (LCD), push-button switch keyboard, interface lead indicator LEDs, user replaceable data port interface modules and internal rechargeable Li-Ion battery. The unit includes the Basic Interfaces, basic operational firmware, comprehensive User Guide, universal AC power adapter (100~240 VAC) and a sturdy hard shell carry case.

Ports	Data Rate: Async (50 ~ 256Kbps), Sync(150 ~ 2048Kbps) Data Code: ASCII, EBCDIC, HEX, IPARS, Transcode, EBCD Data Length: ASYNC Mode: 5,6,7, or 8 bits SYNC Mode: 8 bits Parity Bit: ASYNC Mode:None, Odd, Even, Mark, Space. Stop Bits: ASYNC Mode: 1, 2 E1 I/F Module: Signal Present, HDB3, Signal Loss, FAS Loss, AIS, RAI, MRAI, MFAS Loss, CAS Loss, Pattern Loss, Excess Zero, Error.
Indications	System: External power, I/F 1 Error, I/F 2 Error, Paused. Datacom I/F Module:TD, RD, RTS, CTS, DSR, DTR, DCD, RI, XTC, TC, RC, RL, LL, TM.
Power Input	AC100~240V adapter to DC 19V/2.9A
Dimensions	275 x 220 x 65mm (W x D x H)
Weight	2.5 Kg
Temperature	0°C ~ 50°C (Operating), -10°C ~ 70°C (Storage)
Humidity	10~90% non-condensing
Certification	CE, FCC
MTBF	35,000 hrs (25°C)

Features

- E1, Datacom, Protocol Analyzer and BERT
- Protocols: Frame Relay, SS#7, X.25, PPP (Sync.), V5.1. V5.2, ISDN-D, Sync (BSC), HDLC, SDLC, Async
- Dual pluggable interface ports with available modules:
  Datacom Module: RS-232C/D (V.24), RS-449 (V.36), RS-530, X.21, V.35
  E1 Module: G.703 E1 (2048K)
- Supports Centronics printer & control serial port.
- LCD Display: 320x240 graphic (30 lines x 40 characters), with backlight
- Auto Configuration
- Menu driven setup
- ASYNC terminal Emulation
- File Management
- Self Tests and Diagnostics
- Display Modes: Full /Half Duplex Data, Frame / Packet and Lead Status
- Error Check: None, Parity, LRC, CRC-16, CRC-CCITT.
- Capture Buffer: SDRAM
- Line Monitor: DTE; DCE; DTE & DCE
- Emulation: DTE; DCE; MONITOR only
- Counters & Timers: 5 each internal counters and timers.
- MUX/DEMUX BERT (E1 & Datacom BERT)

Product Overview (Connectors)

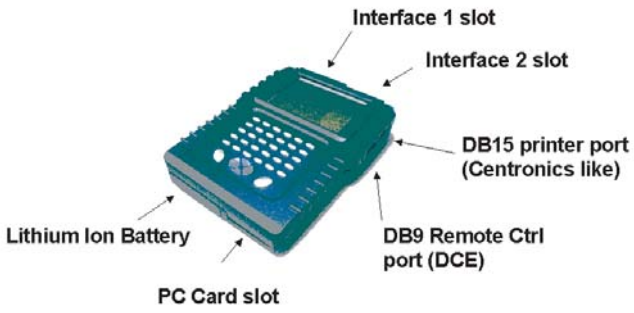

Product Overview (Misc.)

Ordering Information

HCT- □□□□□ Model type

7000 : Master unit with LCD display and AC power adapter

Example: HCT-7000

Hardware Options

- Datacom Interface Module — Two HD26 ports module with adapter cable for RS-232,V.35, RS-530, RS-449, X.21.
- E1 Interface Module — Two BNC ports module with adapter cable

Software Options

- Frame Relay (A) Protocol — Frame Relay Analysis Software package

Analysis software package

- SS#7 F/W — E1 CCS SS#7 Protocol Analysis Firmware Pack.
- ISDN –D F/W — E1 CCS ISDN D-channel Protocol Analysis Firmware Pack.
- V5 F/W — E1 CCS V5.1/V5.2 Protocol Analysis Firmware Pack

Specifications for G.703 E1 BERT

- BERT Patterns

  63, 127, 29^{-1} (511), 2^{-11} (2047), 2^{-15} ITU standard,

  2^{-15} non- standard (inverted), 2^{-20} ITU standard,

  2^{-20} non-standard (inverted), QRSS, 2^{-23} ITU standard,

  2^{-23}-1 non-standard (inverted), ALL ONEs (Mark), ALL ZEROs (Space)

  ALT (0101..), 3 in 24, 1 in 16, 1 in 8, 1 in 4, User Programmable
- BERT Display Format

  ITU G.821

  ITU G.826
- BERT Transmit Error Rate

  Force Single Error: Logic (Bit), Frame, CRC, and BPV(Bipolar Violation)

  Force 10-3 to 10-7 Error Rate: Logic (Bit), Frame, CRC, and BPV
- Performance Analysis:

  Logic, Frame, CRC, BPV, E-bit Errors

  Receive Counter

  Error Seconds

  Error Free Seconds

  Error Rate

  G.821 Available Seconds

  G.821 Degraded Minutes

  G.821 Severely Error Seconds

  G.821 errored Seconds

  G.821 Unavailable Seconds

  G.826 Blocks

  G.826 Available Seconds

  G.826 errored block (EB)

  G.826 Background block error (BBE)

  G.826 errored second (ES)

  G.826 Severely error second (SES)

  G.826 errored second ratio (ESR)

  G.826 Severely error second ratio (SESR)

  G.826 Background block error ratio (BBER)

  LOF (Loss of Frame) Events

  COFA (Change of Frame Alignment) Events

  Severely Error Frame Count.

Specifications for Datacom BERT

DTE or DCE Synchronous BERT

- Interface

  RS-232, V.35, X.21, RS-449, RS-530
- Data rates for 56Kbps Multiples; Nx56Kbps (n=1~32)

  56k, 112k, 168k, 224k, 280k, 336k, 392k, 448k, 504k,

  560k, 616k, 672k, 728k, 784k, 840k, 896k, 952k, 1008k,

  1064k, 1120k, 1176k, 1232k,1288k, 1344k, 1400k, 1456k,

  1512k, 1568k,1624k, 1680k, 1736k, and 1792k bps
- Data rates for 64Kbps Multiples; Nx64Kbps (n=1~32)

  64k, 128k, 192k, 256k, 320k, 384k, 448k, 512k, 576k, 640k,

  704k, 768k, 832k, 896k, 960k, 1024k, 1088k, 1152k, 1216k, 1280k,

  1344k,1408k, 1472k, 1536k, 1544k, 1600k, 1664k, 1728k, 1792k,

  1856k, 1920k, 1984k, and 2048k bps.
- BERT Patterns:

  63, 127, 29^{-1} (511), 2^{-11} (2047), 2^{-15} ITU standard,

  2^{-15} non- standard (inverted), 2^{-20} ITU standard,

  2^{-20} non-standard (inverted), QRSS, 223 -1 ITU standard,

  2^{-23} non-standard (inverted), ALL ONEs (Mark), ALL ZEROs (Space),

  ALT (0101..), 3 in 24, 1 in 16, 1 in 8, 1 in 4, User Programmable
- Tx Clock Source:

  The Tx Clock may be set to internal or external.

  The polarity may also be inverted.
- Rx Clock Source:

  The Rx Clock is set to external. The polarity of

  the external clock may also be inverted
- BERT Transmit Error Rate:

  single, 10e-3, 10e-4, 10e-5, 10e-6, or 10e-7
- Flow Control:

  DCE permitted to transmit on RTS signal or not,

  DTE permitted to transmit on CTS signal or not.

■ *E1 Terminal Mode*

■ *E1 Bridge Mode*

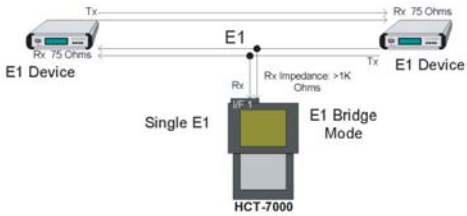

■ *MUX feature - E1 BERT & Datacom BERT*

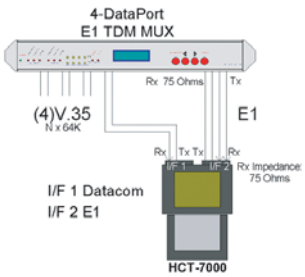

■ *E1 Dual Port - Drop and Insert BERT Test*

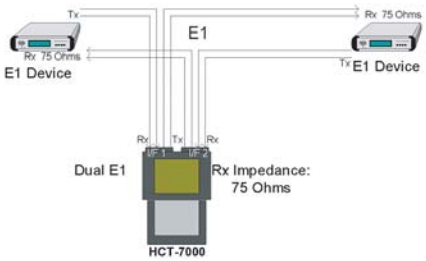

128Kbps Protocol Analyzer with 2M BERT

HCT-6000

The HCT-6000 is a portable, battery powered communication tester, designed for a wide range of protocol analysis up to 128K bps and BERT (Bit Error Rate Tester) at full T1 (1.544Mbps) or E1 (2.048Mbps) speeds and is fully suitable for equipment installations, on-line or off-line diagnostics, debugging, and interface development. It features a backlit Liquid Crystal Display (LCD), tactile membrane switch keyboard, interface lead indicator LEDs, and internal rechargeable batteries. The unit includes a full assortment of interface adapter cables, comprehensive User Guide, AC power adapter (100 to 240VAC) and a sturdy zippered nylon carry case. The HCT-6000A has the same features as the HCT-6000 with the exception of BERT support only to 128K bps.

Features

- Menu driven setup
- Auto Configuration and Scan
- ASYNC terminal emulation
- 128K BERT (Low Speed)
- 2M BERT (High Speed)
- Frame Relay Analysis (option)
- System Reset Function
- Up/Down Load
- On-Line Monitor
- File Management
- Remote Control
- Self Tests and Diagnostics

Basic Interfaces	RS-232C/D(V.24), RS-449(V.36), RS-530, X.21,V.35, printer port, remote control port (RS-232 async)
Protocols	ASYNC, SYNC(BSC), HDLC, SDLC, X.25, DDCMP
Optional software	Frame Relay, PPP/SLIP, SNA ROM, G.826
Data rate	**ASYNC :** 50-115,200bps, **SYNC :** 150-128,000bps
Data code	ASCII, EBCDIC, HEX, IPARS, TRANSCODE, EBCD
Data Length	**ASYNC Mode:** 5,6,7, or 8 bits **SYNC Mode:** 8 bits
Parity Bit	**ASYNC Mode:** None, Odd, Even
Stop Bits	**ASYNC Mode:** 1, 1 1/2, 2
Display Mode	LSB or Inverted, Normal or Inverted, Full/Half Duplex, Data and Lead Status, Frame and Packet
Error Check	None, Parity, LRC, CRC-16, CRC-CCITT
LCD Display	8 lines, 32 characters per line, with backlight and contrast controls
Capture Buffer	512KB static ram, battery backed up.
Line Monitor	DTE; DCE; DTE & DCE
Emulation	DTE; DCE; MONITOR only
BERT Patterns	63, 511, 2047, FOX (ASCII), SPACE, MARK, ALT
BERT Speed	2Mbps (except HCT-6000A) 128Kbps
Counter & Timer	5 each internal counter and timer
Indications	LEDs (TD, RD, RTS, CTS, DSR, DTR, DCD, TC, RC, XTC, DTE,ECE, Sync loss)
Power Input	100~240VAC adapter to 12VDC 600mA
Dimension	237 x 173 x 37mm (W x D x H)
Weight	1.2 Kg
Temperature	0°C ~ 50°C (Operating), -10°C ~ 70°C (Storage)
Humidity	10 ~ 90% non-condensing
Certification	CE, FCC
MTBF	35,000 hrs (25°C)

Line Testing application

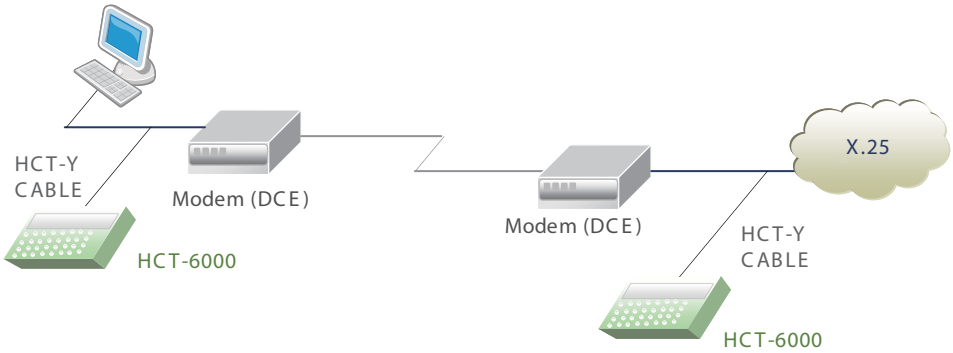

HCT-6000 Back view

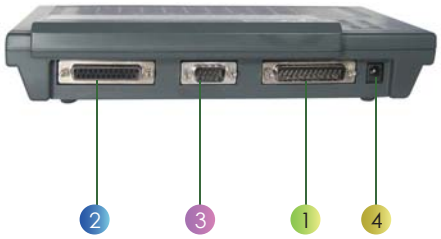

1 **COMMUNICATION**
V.24/RS232, V.35, or RS-449. (switch selectable)
note: G.703 available with optional external adapter and set to RS-449 mode.

2 **PRINTING** CENTRONICS Parallel port.

3 **REMOTE** Serial port used for remote control.

4 **Power** DC9V in.

PROTOCOL ANALYSIS
The HCT-6000 is capable of performing protocol analysis for ASYNC, SYNC, HDLC, SDLC(NRZI), SDLC, DDCMP, X.25 (Frame and Packet), and FRAME RELAY, as well as options for testing TCP/IP, SLIP, PPP, and detailed testing of FRAME RELAY.

AUTO CONFIGURATION
The HCT-6000 provides the ability to analyze line data to automatically detect and set communication protocol type, data RATE, data CODE, data FORMAT, parity and synchronous PATTERN.

BERT/BLERT : Bit/block Error Rate Test
a. Transmit/ Receive Patterns : Includes Mark, Space, ALT, FOX, 63, 511, 2047. The 2Mbps BERT also includes 2^{15}-1, 2^{20}-1, 2^{23}-1 and QRSS.
b. Data Block Size : Under CCITT specifications, 63, 511, 1000, 2047 bits.
c. Error Rate Test : Contains a bit COUNTER, bit ERROR numbers, a block COUNTER, block ERROR numbers, errorSECONDS, forced ERRORS, and bit error rate as a calculation of TOTAL NO. OF RECEIVED ERROR BITS□TOTAL NO. OF RECEIVED BITS.

INTERNAL TIMERS & COUNTERS
The HCT-6000 contains five registers for Timers (in milliseconds) and five registers for Counters (in units) for program start/stop.

HARD COPY PRINT
A standard CENTRONICS INTERFACE with Female DSUB-25 connector is provided for printing CAPTURED data, PROGRAMMING, SETUP configuration information, and BERT results.

TERMINAL EMULATION
The HCT-6000 provides a complete setup of all communication parameters, Baud rate, data bits, stop bits, parity bit, etc., including Half duplex (local echo) and Full Duplex (remote echo) modes and in either DCE (data communication equipment, such as modems) or DTE (data terminal equipment, terminals) configurations.

DATA LINE MONITOR
Simulation : DCE or DTE, Data and Status, Frame and Packet. Record data in real-time into capture memory.
Monitor : DTE only, DCE only, or DTE/DCE at the same time.
Protocols : SDLC, SDLC(NRZI), HDLC, SYNC(BSC), ASYNC, DDCMP, X.25, FRAME RELAY.

SUPPORTED INTERFACE STANDARDS
V.35 to G.703, RS-449 to G.703, RS422, X.20/X.21,RS485, RS449, RS-530, RS232, CURRENT LOOP. TTL interface.

BCC / Error Checking
ASYNC LRC, CRC-16, NONE. SYNC CRC-16, LRC, CRC-CCITT, NONE. HDLC CRC-CCITT, SDLC CRC-CCITT, X.25 CRC-CCITT
Frame Relay CRC-CCITT

DATA CODES
ASCII, EBCDIC, HEX, IPARS, TRANSCODE, EBCD.

2M BERT Test Patterns
The transmit patterns under 2M BERT include 63/127/511/2047, MARK (all 1's), SPACE (all 0's), ALT(0101), 2e15-1, 2e20-1, 2e23-1, and QRSS. In SYNC mode only.

2M BERT Test Speeds
The speeds available under 2M BERT are 48k, N64 values of 64k, 128k, 192k, 256k, 320k, 384k, 448k,512k, 576k, 640k, 704k, 768k, 832k, 896k, 960k,1024k, 1088k, 1152k, 1216k, 1280k, 1344k, 1408k,1472k, 1536k, 1544k, 1600k, 1664k, 1728k, 1792k, 1856k, 1920k, 1984k, 2048k, plus N56 values of 56k, 112k, 168k, 224k, 280k, 336k, 392k, 448k, 504k, 560k,616k, 672k, 728k, 784k, 840k, 896k, 952k, 1008k,1064k, 1120k, 1176k, 1232k, 1288k, 1344k, 1400k,1456k, 1512k, 1568k, 1624k, 1680k, 1736k, and 1792kbps.

Ordering Information

HCT- □□□□□ Model type
6000 : 128K Protocol Analyzer & 128K /BERT
6000A :128K Protocol Analyzer & 2M BERT
Example: HCT-6000

Optional software

- Frame-Relay — Frame-Relay software package
- TCP/IP — TCP/IP,PPP,SLIP software package
- SNA ROM — SNA ROM software package
- G.826 — ITU G.826 software package

E1/T1 Analyzer and BER Tester

BTM10

The BTM10 E1/T1 analyzer is a compact, sub-note sized E1/T1 PCM measuring instrument designed for field use in analysis and maintenance of data communications (V.35, RS-530/449/232/422 and X.21), E1 (2.048Mbps) or T1 (1.544Mbps) lines. The BTM10 performs framed, unframed, signaling analysis, drop and insert 8K voice, Nx64Kbps, or Nx56Kbps data into any time slot. The BTM10 analyzer also provides a variety of E1 or T1 line statuses, transmission performance testing (BERT) and monitoring. On the E1 or T1 line, the BTM10 may be used as a generator or receiver.

Features

- E1 BERT Analysis: E1/T1frame, code, CRC, and BPV performance analysis and generator.
- Alarm Setting: Manual or automatic alarm setting.
- VF Access: Drop and Insert 8K voice; frequency generator (transmit VF Frequency from 60 to 3950 Hz, transmit VF level from 0dBm to -55dBm) and measurement (A-law and u-law). Voice access by using telephone handset. E1/T1 pulse shape analysis. E1/T1 PCM level meter and frequency analysis.
- Pulse Shape: E1/T1 pulse shape analysis
- Signal Result: E1/T1 PCM level meter and frequency analysis
- Signaling Setting: ABCD bit setting
- Signaling Display: Display all channel's of ABCD bits
- BERT on Data port: Data port BERT performance analysis
- Remote control: Remote controlled by PC terminal or modem
- SS7 analysis: Decode and performance analysis of levels 2, 3, 4
- V5.1/V5.2 Analysis: Monitoring V5 Signaling information
- ISDN Analysis: Digital Subscriber Signaling System No.1 (DSS 1)-Monitoring ISDN D-Channel Signaling information (ITU Q.921,Q.931)

Example Analysis: off-line analysis of BERT performance
External Drop and insert: Acts as a fractional E1 or T1 converter
User Programmable pattern setting:
There are three 32 bit programmable patterns, which can be inserted onto the E1/T1 line and drop for analysis available, by passed, or idle
Timeslot setting: Timeslot, Drop and Insert Nx64k data onto E1/T1 line
Timeslot mapping data: Analyze any channel data of two frames
Slip measure: Uncontrolled, Controlled, Frame, and Timing SLIP measure
Sa bits setup and monitor: Multi-frame Sa bits setup and monitor.(E1 only)
File management: Ten configuration and result memory locations can be stored and recall by user
Datacom clock measurement
Round trip delay measurement

General	• 1 port E1 (BNC unbalanced and DB15 balanced), T1 (DB15 balanced) ITU G.703(E1), ANSI T1.403(T1) & ITU G.703(T1) • 1 port data communications s/w selectable V.35, RS530, X.21, RS-232 • 1 port RS-232 console, remote • 1 port parallel printer port Print out via parallel Port • LCD display 32 Characters x 8 Lines, Text / Graphic mode
Indications	LEDs (TD, RD, RTS, CTS, DSR, DTR, DCD, TC, RC, XTC, DTE,ECE, Sync loss)
Power Input	AC100~240V adapter to DC 12V 1A
Dimensions	137 x 235 x 54mm (W x D x H)
Weight	1.6 Kg
Temperature	0°C ~ 50°C (Operating), -10°C ~ 70°C (Storage)
Humidity	10~90% non-condensing
Certification	CE, FCC
MTBF	35,000 hrs (25°C)

Receiver in Terminal Mode

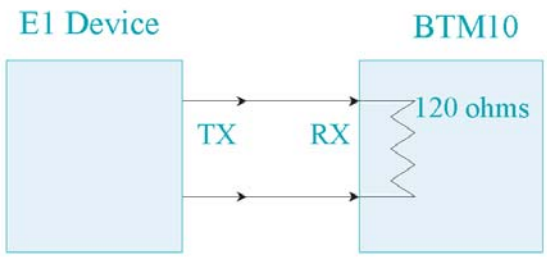

Receiver in Monitor Mode

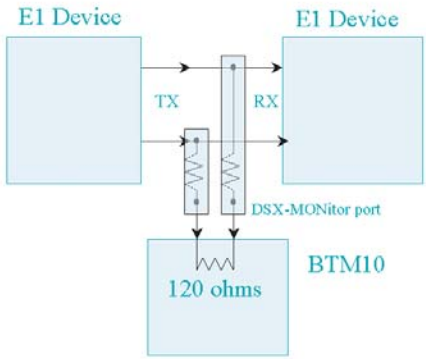

E1 specification

1.Receiver Interface of E1/CEPT

- Line Code: HDB3/AMI
- Pulse characteristics: meets ITU G.703
- Jitter Tolerance: meets ITU G.823
- Input Port Type: Coaxial pair Symmetrical pair DB15 (balanced)
- Input mode (with AGC):

Termination: Coaxial Pair Impedance:75ohm resistive (unbalanced)
Symmetrical Pair Impedance:120ohm resistive (balanced)
Return Loss: >18dB
Receive Sensitivity:+3dB to -40dB
Bridge Mode: Impedance: >1000ohm Receive Sensitivity: +3dB to -30dB
DSX-Monitor Mode: Coaxial Pair Impedance 75ohm resistive(unbalanced)
Symmetrical Pair Impedance:120 ohm resistive (balanced)
Receive Sensitivity: +6dBdsx to -30dBdsx
Receive Timing Range: 2.048MHz±4000Hz

2.Transmitter Interface of E1/CEPT

- Bit Rate:2048K bit/s+/-3ppm
- Line Code:HDB3/AMI
- Pulse characteristics: Meets ITU G.703
- Pulse Amplitude: Nominal 2.37V for Coaxial Pair 75 ohm
  Nominal 3.00V for Symmetrical Pair 120 ohm
- Zero Amplitude:+0.1 V max.
- Jitter Tolerance: Meets ITU G.823
- Output Port Type: Coaxial pair: BNC (unbalance)
  Symmetrical pair: Bantam or DB15 (balanced)
- TX Clock Source:

1.Internal Timing: 2.048MHz+/-3ppm.
2.Internal Timing plus 50ppm offset(30ppm factory option)
3.Internal Timing minus 50ppm offset(30ppm factory option)
4.Recovery from RX Timing (Loop Timing)
5.External Timing
6.Data Port Timing

3. E1/CEPT Frame Structure

Unframed / FAS (PCM31) / FAS+CRC4 (PCM31 with CRC)
FAS+CAS (PCM30) / FAS+CRC4+CAS (PCM30 with CRC)

4. Line Build Out

0dB / -7.5dB / -15dB / -22.5dB (Accuracy: +/-1dB)

5. E1/T1 Analyzer mode

1.Channel Map
2.Line Attenuation
3.Slip Measure
4.Signaling
5.General Status: Signal Present / HDB3 / Pattern Sync / Frame Sync / Looping
6.Results: Bit Errors / BPV Errors / Frame Errors / CRC Errors / G.821 Analysis / G.826 Analysis
7.Alarm/Warning: Signal Loss(Pulses) / Frame Loss / Pattern Loss / Excess Zero Error / One Density / AIS / SLIP / RAI / MRAI
8.Print out of test results.

T1 Specification

1.Receiver Interface of T1/DS1

- Line Code: B8ZS/AMI
- Pulse characteristics: meets ITU G.703
- Jitter Tolerance: meets ITU G.824
- Input Port Type: Symmetrical pair: Bantam or DB15 (balanced), and BNC Symmetrical pair
- Input mode (with AGC):

Termination: Symmetrical Pair Impedance: 100ohm resistive +/- 5% resistive(unbalanced)
Return Loss: >18dB
Receive Sensitivity:+6dB to -36dB
Bridge Mode: Impedance: >1000ohm
Receive Sensitivity: +6dB to -36dB
DSX-Monitor Mode: Symmetrical Pair Impedance:
100ohm resistive +/- 5% resistive(unbalanced)
Receive Sensitivity: up to -30dBdsx
Receive Timing Range: 1.544MHz +/- 4000Hz

2.Transmitter Interface of T1/DS1

- Bit Rate: 1544K bit/s+/-3ppm
- Line Code: B8ZS/AMI
- Pulse characteristics: Meets ITU G.703
- Pulse Amplitude: Nominal 3.00V for Symmetrical Pair 100 ohm
- Zero Amplitude: +0.1 V max.
- Jitter Tolerance: Meets ITU G.824
- Output Port Type: Symmetrical pair: Bantam or DB15 (balanced)
- TX Clock Source:

1. Internal Timing: 1.544MHz +/-3ppm
2. Internal Timing plus 50ppm offset (30ppm factory option)
3. Internal Timing minus 50ppm offset (30ppm factory option)
4. Recovery from RX Timing (Loop Timing)
5. External Timing
6. Data Port Timing

3. T1/DS1 Frame Structure

ESF / ESF+CRC6 / D4(SF) / SLC-96 / T1DM / Unframed

4.Line Build Out:

0dB , -7.5dB , -15dB , -22.5dB (Accuracy: +/-1dB)

Receiver in Bridge Mode

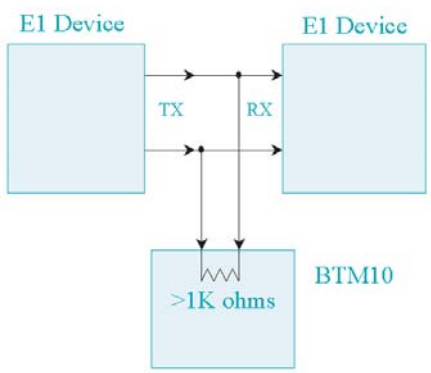

Specifications for G.703 E1/T1 BERT

1. BERT Patterns

- 63, 127, 29-1 (511), 211-1 (2047), 215-1 ITU standard,
- 215-1 non- standard (inverted), 220-1 ITU standard,
- 220 -1 non-standard (inverted), QRSS, 223 -1 ITU standard,
- 223-1 non-standard (inverted), ALL ONEs (Mark), ALL ZEROs (Space), ALT (0101..), 3 in 24, 1 in 16, 1 in 8, 1 in 4, User Programmable

2.BERT Display Format

- Normal ITU-M.2100 (option) / ITU G.821 / ITU G.826

3. BERT Transmit Error Rate

- Force Single Error: Logic (Bit), Frame, CRC, and BPV (Bipolar Violation)
- Force 10-3 to 10-7 Error Rate: Logic (Bit), Frame, CRC, and BPV

4. Performance Analysis

- Logic, Frame, CRC, BPV, E-bit Errors
- Receive Counter
- Error Seconds
- Error Free Seconds
- Error Rate
- G.821 Available Seconds
- G.821 Degraded Minutes
- G.821 Severely Error Seconds
- G.821 Error Seconds
- G.821 Unavailable Seconds
- G.826 Blocks
- G.826 Available Seconds
- G.826 errored block (EB)
- G.826 background block error (BBE)
- G.826 errored second (ES)
- G.826 severely errored second (SES)
- G.826 errored second ratio (ESR)
- G.826 severely errored second ratio (SESR)
- G.826 background block error ratio (BBER)
- LOF (Loss of Frame) Events
- COFA (Change of Frame Alignment) Events
- Severely Errored Frame Count.

Specifications for Datacom BERT

Mode A: DTE or DCE Synchronous BERT

- Interface
  RS-232, V.35, X.21, RS-449, RS-530
- Data rates for 56Kbps Multiples; Nx56Kbps (n=1~24)
  56k, 112k, 168k, 224k, 280k, 336k, 392k, 448k, 504k, 560k, 616k, 672k, 728k, 784k, 840k, 896k, 952k, 1008k, 1064k, 1120k, 1176k, 1232k,1288k, 1344k, 1400k, 1456k, 1512k, 1568k,1624k, 1680k, 1736k, and 1792k bps.
- Data rates for 64Kbps Multiples; Nx64Kbps (n=1~32)
  64k, 128k, 192k, 256k, 320k, 384k, 448k, 512k, 576k, 640k, 704k, 768k, 832k, 896k, 960k, 1024k, 1088k, 1152k, 1216k, 1280k, 1344k,1408k, 1472k, 1536k, 1544k, 1600k, 1664k, 1728k, 1792k, 1856k, 1920k, 1984k, and 2048k bps.
- BERT Patterns:
  63, 127, 29-1 (511), 211-1 (2047), 215-1 ITU standard, 215-1 non- standard(inverted), 220-1 ITU standard, 220 -1 non-standard(inverted), QRSS, 223 -1 ITU standard, 223-1 non-standard(inverted), ALL ONEs (Mark), ALL ZEROs (Space), ALT (0101..), 3 in 24, 1 in 16, 1 in 8, 1 in 4, User Programmable
- Tx Clock Source:
  The Tx Clock may be set to internal or external. The polarity may also be inverted.
- Rx Clock Source:
  The Rx Clock is set to external. The polarity of the external clock may also be inverted.
- BERT Transmit Error Rate:
  single, 10e-3, 10e-4, 10e-5, 10e-6, or 10e-7.
- Flow Control:
  DCE permitted to transmit on RTS signal or not, DTE permitted to transmit on CTS signal or not.

Mode B: DTE or DCE Synchronous BERT

1. Data Rate

- Asynchronous: from 50 to 115.2K bps.
- Synchronous: from 150 to 72K bps.

2. BERT Patterns

- 63, 511, 2047, FOX, SPACE, MARK, and ALT

3. Tx Clock Source

- DTE or DCE

4. Flow Control

- Xon/Xoff, RTS/CTS, or disable

Ordering Information

■ BTM10-E1/T1	Both E1 and T1 analyzer (Full function ; with pulse shape/datacom function)
■ BTM10A-E1/T1	Without pulse shape function
■ BTM10B-E1/T1	Without datacom function
■ BTM10C-E1/T1	Without pulse shape/datacom function
■ BTM10D-E1/T1	Without VF/pulse shape function

Optional Function

■ Datacom Feature	Datacom BERT External drop/insert
■ Pulse shape Feature	Pulse shape Analysis Signal result level measurement
■ BTM10-SS # 7	Decode or Level 2,3 and 4 Performance Measurement
■ BTM10-ISDN	ITU Q.921, Q.931 recommendation

E1/T1/Datacom BER Tester

HCT-BERT/H

The HCT-BERT/H is a compact, sub-note sized E1/T1 Bit Error Rate Tester (BERT) designed for field use in maintenance of data communications (V.35, RS-530/449/232/422 and X.21), E1 (2.048Mbps) or T1 (1.544Mbps) lines. The HCT-BERT/H performs framed, unframed, signaling analysis, drop and insert Nx64Kbps, or Nx56Kbps data into any time slot. The HCT-BERT/H analyzer also provides a variety of E1 or T1 line statuses, transmission performance testing (BERT) and monitoring. On the E1 or T1 line, the BTM10 may be used as a generator or receiver.

Interface	• 1 port E1 (BNC unbalanced and DB15 balanced), T1 (DB15 balanced) ITU G.703(E1), ANSI T1.403(T1) & ITU G.703(T1) • 1 port data communications s/w selectable V.35, RS530, X.21, RS-232 • 1 port RS-232 console, remote • 1 port parallel printer port Print out via parallel Port • LCD display 32 Characters x 8 Lines, Text / Graphic mode
Indications	LEDs (TD, RD, RTS, CTS, DSR, DTR, DCD, TC, RC, XTC, DTE,ECE, Sync loss)
Power Input	AC100~240V adapter to DC 12V 1A
Dimension	137 x 235 x 54mm (W x D x H)
Weight	1.6 Kg
Temperature	0°C ~ 50°C (Operating), -10°C ~ 70°C (Storage)
Humidity	10~90% non-condensing
Certification	CE, FCC
MTBF	35,000 hrs (25°C)

Features

- E1 BERT Analysis: E1/T1frame, code, CRC, and BPV performance analysis and generator.
- Alarm Setting: Manual or automatic alarm setting.
- Signal Result: E1/T1 PCM level meter and frequency analysis
- Signaling Setting: ABCD bit setting
- Signaling Display: Display all channel's of ABCD bits
- BERT on Data port: Data port BERT performance analysis
- Remote control: Remote controlled by PC terminal or modem
- Example Analysis: off-line analysis of BERT performance
- External Drop and insert: Acts as a fractional E1 or T1 converter
- User Programmable pattern setting:
  There are three 32 bit programmable patterns, which can be inserted onto the E1/T1 line and drop for analysis available, by passed, or idle
- Timeslot setting: Timeslot, Drop and Insert Nx64k data onto E1/T1 line
- Timeslot mapping data: Analyze any channel data of two frames
- Slip measure: Uncontrolled, Controlled, Frame, and Timing SLIP measure
- Sa bits setup and monitor: Multi-frame Sa bits setup and monitor.(E1 only)
- File management: Ten configuration and result memory locations can be stored and recall by user
- Datacom clock measurement

G.703 E1/T1 BERT specification

1. BERT Patterns
63, 127, 29-1 (511), 211-1 (2047), 215-1 ITU standard,
215-1 non- standard (inverted), 220-1 ITU standard,
220 -1 non-standard (inverted), QRSS, 223 -1 ITU standard,
223-1 non-standard (inverted), ALL ONEs (Mark), ALL ZEROs (Space),
ALT (0101..), 3 in 24, 1 in 16, 1 in 8, 1 in 4, User Programmable

2. BERT Display Format
Normal ITU-M.2100 (option)
ITU G.821
ITU G.826

3. BERT Transmit Error Rate
Force Single Error: Logic (Bit), Frame, CRC, and BPV (Bipolar Violation)
Force 10-3 to 10-7 Error Rate: Logic (Bit), Frame, CRC, and BPV

4. Performance Analysis
Logic, Frame, CRC, BPV, E-bit Errors / Receive Counter
Error Seconds / Error Free Seconds / Error Rate
G.821 Available Seconds / G.821 Degraded Minutes
G.821 Severely Error Seconds / G.821 Error Seconds
G.821 Unavailable Seconds / G.826 Blocks
G.826 Available Seconds / G.826 errored block (EB)
G.826 background block error (BBE) / G.826 errored second (ES)
G.826 severely errored second (SES)
G.826 errored second ratio (ESR)
G.826 severely errored second ratio (SESR)
G.826 background block error ratio (BBER)
LOF (Loss of Frame) Events
COFA (Change of Frame Alignment) Events
Severely Errored Frame Count.

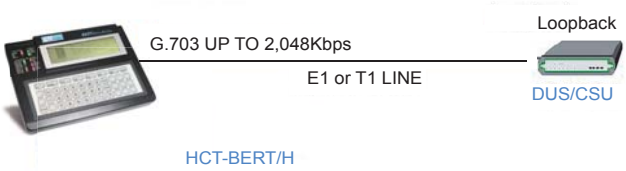

Ordering Information

HCT- □□□□□ Model type

BERT/H

Example: HCT-BERT/H

E1 Specification

1.Receiver Interface of E1/CEPT

- Line Code:HDB3/AMI
- Pulse characteristics: meets ITU G.703
- Jitter Tolerance: meets ITU G.823
- Input Port Type: Coaxial pair
  Symmetrical pair
  DB15 (balanced)
- Input mode (with AGC):Coaxial Pair Impedance:
- Termination: 75ohm resistive (unbalanced)
  Symmetrical Pair Impedance:
  120ohm resistive(balanced)
  Return Loss: >18dB
  Receive Sensitivity:+3dB to -40dB
  Impedance: >1000ohm
- Bridge Mode: Receive Sensitivity: +3dB to -30dB
  Coaxial Pair Impedance
- DSX-Monitor Mode:75ohm resistive(unbalanced)
  Symmetrical Pair Impedance:
  120 ohm resistive (balanced)
  Receive Sensitivity: +6dBdsx to -30dBdsx
- Receive Timing Range: 2.048MHz±4000Hz

2.Transmitter Interface of E1/CEPT

- Bit Rate:2048K bit/s+/-3ppm
- Line Code: HDB3/AMI
- Pulse characteristics: Meets ITU G.703
- Pulse Amplitude: Nominal 2.37V for Coaxial Pair 75 ohm
  Nominal 3.00V for Symmetrical Pair 120 ohm
- Zero Amplitude: +0.1 V max.
- Jitter Tolerance: Meets ITU G.823
- Output Port Type: Coaxial pair: BNC (unbalanced)
  Symmetrical pair: Bantam or DB15 (balanced)
- TX Clock Source: 1. Internal Timing: 2.048MHz+/-3ppm.
  2. Internal Timing plus 50ppm offset
  (30ppm factory option)
  3. Internal Timing minus 50ppm offset
  (30ppm factory option)
  4. Recovery from RX Timing (Loop Timing)
  5. External Timing
  6. Data Port Timing

3. E1/CEPT Frame Structure

- Unframed
- FAS (PCM31)
- FAS+CRC4 (PCM31 with CRC)
- FAS+CAS (PCM30)
- FAS+CRC4+CAS (PCM30 with CRC)

4. Line Build Out

0dB / -7.5dB / -15dB

E1/T1 Analyzer mode

- Channel Map
- Line Attenuation
- Slip Measure
- Signaling
- General Status:
  Signal Present / HDB3 / Pattern Sync / Frame Sync / Looping
- Results:
  Bit Errors / BPV Errors / Frame Errors / CRC Errors / G.821 Analysis / G.826 Analysis
- Alarm/Warning:
  Signal Loss(Pulses) / Frame Loss / Pattern Loss / EXcess Zero Error / One Density / AIS / SLIP / RAI / MRAI
- Print out of test results.

T1 specifications

1. Receiver Interface of T1/DS1

- Line Code:B8ZS/AMI
- Pulse characteristics: meets ITU G.703
- Jitter Tolerance: meets ITU G.824
- Input Port Type: Symmetrical pair: Bantam or DB15 (balanced)
- Input mode (with AGC):
- Termination: Symmetrical Pair Impedance:
  100ohm resistive +/- 5% resistive (unbalanced)
- Return Loss: >18dB
- Receive Sensitivity:+6dB to -36dB
- Bridge Mode: Impedance: >1000ohm
- Receive Sensitivity: +6dB to -36dB
- DSX-Monitor Mode: Symmetrical Pair Impedance:
  100ohm +/- 5% resistive
  Receive Sensitivity: up to -30dBdsx
- Receive Timing Range:1.544MHz +/- 4000Hz

2. Transmitter Interface of T1/DS1

- Bit Rate: 1544K bit/s+/-3ppm
- Line Code: B8ZS/AMI
- Pulse characteristics: Meets ITU G.703
- Pulse Amplitude: Nominal 3.00V for Symmetrical Pair 100 ohms
- Zero Amplitude:+0.1 V max.
- Jitter Tolerance: Meets ITU G.824
- Output Port Type: Symmetrical pair: Bantam or DB15 (balanced)
- TX Clock Source:1. Internal Timing: 1.544MHz+/-3ppm.
  2. Internal Timing plus 50ppm offset
  3. Internal Timing minus 50ppm offset
  4. Recovery from RX Timing (Loop Timing)
  5. External Timing
  6. Data Port Timing

3. T1/DS1 Frame Structure

ESF / ESF+CRC6 / D4(SF) / SLC-96 / T1DM / Unframed

4. Line Build Out

0dB / -7.5dB / -15dB / -22.5dB (Accuracy: +/-1dB)

Datacom BERT Specification

Mode A: DTE or DCE Synchronous BERT

- Interface
  RS-232, V.35, X.21, RS-449, RS-530
- Data rates for 56Kbps Multiples; Nx56Kbps (n=1~32)
  56k, 112k, 168k, 224k, 280k, 336k, 392k, 448k, 504k, 560k, 616k, 672k, 728k, 784k, 840k, 896k, 952k, 1008k, 1064k, 1120k, 1176k, 1232k,1288k, 1344k, 1400k, 1456k,1512k, 1568k,1624k, 1680k, 1736k, and 1792k bps.
- Data rates for 64Kbps Multiples; Nx64Kbps (n=1~32)
  64k, 128k, 192k, 256k, 320k, 384k, 448k, 512k, 576k, 640k, 704k, 768k, 832k, 896k, 960k, 1024k, 1088k, 1152k, 1216k, 1280k, 1344k,1408k, 1472k, 1536k, 1544k, 1600k, 1664k, 1728k, 1792k, 1856k, 1920k, 1984k, and 2048k bps.
- BERT Patterns:
  63, 127, 29-1 (511), 211-1 (2047), 215-1 ITU standard, 215-1 non- standard(inverted), 220-1 ITU standard, 220 -1 non-standard(inverted), QRSS, 223 -1 ITU standard, 223-1 non-standard(inverted), ALL ONEs (Mark), ALL ZEROs (Space), ALT (0101..), 3 in 24, 1 in 16, 1 in 8, 1 in 4, User Programmable
- Tx Clock Source: The Tx Clock may be set to internal or external.
  The polarity may also be inverted.
- Rx Clock Source: The Rx Clock is set to external. The polarity of the external clock may also be inverted.
- BERT Transmit Error Rate: single, 10e-3, 10e-4, 10e-5, 10e-6, or 10e-7.
- Flow Control: DCE permitted to transmit on RTS signal or not,
  DTE permitted to transmit on CTS signal or not.
- Mode B: DTE or DCE Synchronous BERT
  1. Data Rate: Asynchronous: from 50 to 115.2K bps.
  Synchronous: from 150 to 72K bps.
  2. BERT Patterns: 63, 511, 2047, FOX, SPACE, MARK, and ALT
  3. Tx Clock Source: DTE or DCE.
  4. Flow Control: Xon/Xoff, RTS/CTS, or disable

E1/T1/Datacom BER Tester with Color LCD

HCT-BERT/C

The HCT-BERT/C analyzer is a compact, color-LCD, graphic-user-interface, single hand E1 PCM measuring instrument designed for field use in analysis and maintenance of data communications (V.35, RS530, X.21, RS232) and E1 (2.048Mbps) lines. The HCT-BERT/C performs framed, unframed, signaling analysis, drop and insert Nx64Kbps, or nx56Kbps data into any time slot. The HCT-BERT/C analyzer also provides a variety of E1 line statuses, transmission performance testing (BERT) and monitoring. On the E1 line, the HCT-BERT/C may be used as a generator or receiver.

Features

- Color LCD display graphic mode
- USB port for remote control
- Results Report
- Support G.821/826, M.2100 BERT analysis
- Sa bits setup and monitor
- Internal Memory storage of test result; Direct display on LCD screen
- Print out via Parallel Printer port
- Portable for field use
- Upgradeable for advanced features
- Rechargeable battery with battery low indicator
- Supports CRV & BPV performance analysis
- Datacom BERT analysis available for V.35/ V.24/RS-232/449/530/ X.21

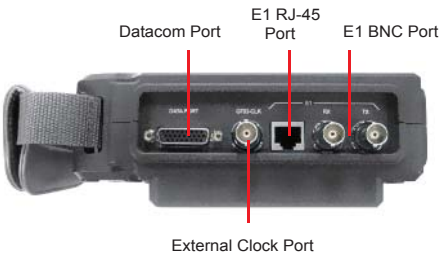

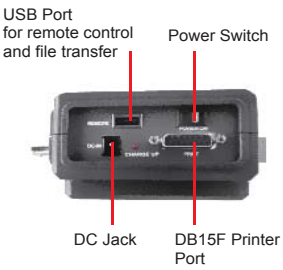

Ordering Information

HCT- □□□□□ Model type

BERT
BERTC

Example: HCT-BERT

E1 interface	1). E1 Receiving Interface • Line code: HDB3/AMI • Pulse feature: ITU G.703 • Dithering tolerance: ITU G.823 • Input port: BNC (non-balance), RJ45 (balance) • Input mode: Impedance: 75ohm (unbalance), 120ohm (balance) • Bridging mode: Impedance > 1000 ohm 2). E1 Transmission Interface • Line code: HDB3/AMI • Pulse feature: ITU G.703 • Pulse amplitude: Nominal 2.37V for BNC 75 ohm Nominal 3.00V for RJ45 120 ohm • Zero amplitude: 0.1 V at max • Dithering tolerance: ITU G.823 • Output port model: BNC (non-balance), RJ45 (balance) • Source of clock transmission: Internal clock: 2.048 MHz 50ppm, 100ppm. External clock: take clock from external clock interface Resume clock: take clock from receiving terminal 3). E1 Frame Format • PCM31, PCM31+CRC, PCM30, PCM30+CRC • Non-framing mode, Automatic detection
Error Rate Test (BERT Test)	1). BERT Pattern (Patterns) 511, 2047, 2E15-1, 2E15-1 (reverse), 2E20-1, 2E20-1 (reverse), QRSS, 2E23-1, 2E23-1 (reverse), all 1, all 0, alternate, 1100, 3 IN 24, 1 IN 16, 1 IN 8, 1 IN 4, User programming 1/2/3 2). BERT Display Format • Error counting, Alarm counting, ITU G.821, ITU G.826 • M.2100, Histogram 3). BERT Transmission Error Rate • Insert one error compulsorily • Apply an error rate of 10-3-10-7 compulsorily 4). Quality Analysis: • Receiving seconds, Error seconds, Alarm seconds • Free-of-error seconds, Error rate, Valid seconds • Serious error seconds, G.821 error seconds • G.826 error seconds, Invalid seconds 5). Data Port BEST Test • Data rate of the multiple of 64Kbps: N*64Kbps (N=1～36)
Other Functions	1). Color Display Screen: Character/graphic mode 2). Test Results Report • 100 pieces of test results at max available in storage • Direct display on LCD screen • Print via printer port available 3). Modular Design for Easy Update
Indications	LEDs (DTE, DCE, DATA PORT, TD, RD, DCD, RTS, CTS, DTR, DSR, TC, RC XTC)
Power Input	AC230V adapter to DC 9V 2A
Dimension	134 x 179 x 68mm (W x D x H)
Weight	800g
Temperature	0°C ~ 50°C (Operating), -10°C ~ 70°C (Storage)
Humidity	10~90% non-condensing
MTBF	35,000 hrs (25°C)

Handy LAN Cable Continuity Tester / Cable Identifier

LCT-300/400

The LCT-300 / LCT-400 LAN Cable Testers are intelligent continuity testers for LAN cables which save time on the job. Their intuitive operations keep you from wasting time working through complex menus. A remote terminator helps in identifying cables when labeling after installation.

Features

- Hand-held and easy to operate
- Battery low indicator
- Can review the captured pin assignment and failure status
- Easy to read cable status to verify cable continuity; open, short, and mismatches
- Easy to read LCD display, with 2 line by 12 characters with LCD back light
- Automatic power shut down feature for extended battery life
- Identify and trace the other end's ID (using supplied terminator)
- Maximum testing length is up to 1030 meters
- Standard pin configurations and (4) user defined cable modes memorized in CPU
- Suggestion mode for intelligent cable identification (Cable type each)
- Tests for shielded and non-shielded cable types (Extra feature for LCT-400)
- Easy to identify RJ-45 and BNC cable types against preset wiring schemes

General

Connector	RJ45
Control Key	ENTER, Mode, ESC
Power Input	DC 9V battery
Dimensions	154 x 65 x 35mm (W x D x H)
Weight	300g
Temperature	0°C ~ 50°C (Operating),-10°C ~ 70°C (Storage)
Humidity	10~90% non-condensing
MTBF	35,000 hrs (25°C)

Cable & Recognized Wiring Schemes

- Tests for shielded and non-shedlded cable types
- Unshielded twisted pair (UTP) 100 ohms category 3, 4 & 5
- Foil shiedlded twisted pair (FTP) 100 ohms & 120 ohms category 3
- Shielded twisted pair (STP) 150 ohms type 1 & 6
- 10Base-T, 100Base-TX and 100Base-T4
- TP-PMEDIA / TIA-568A/B
- Token ring
- USOC
- 10Base / HUB (AT&T 258A)
- Plus user defined

Local Test

Remote Test

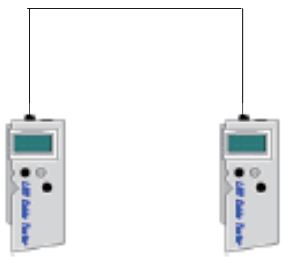

Terminator Loopback

Ordering Information

LCT- □□□□□ Model type

300BK : RJ45 LAN Cable tester with LCD backlight
400BK : RJ45/BNC cable tester with LCD Backlight
T/X-R : ID terminator (1 ~ 8)

Example: LCT-300

Chapter 6.

Interface

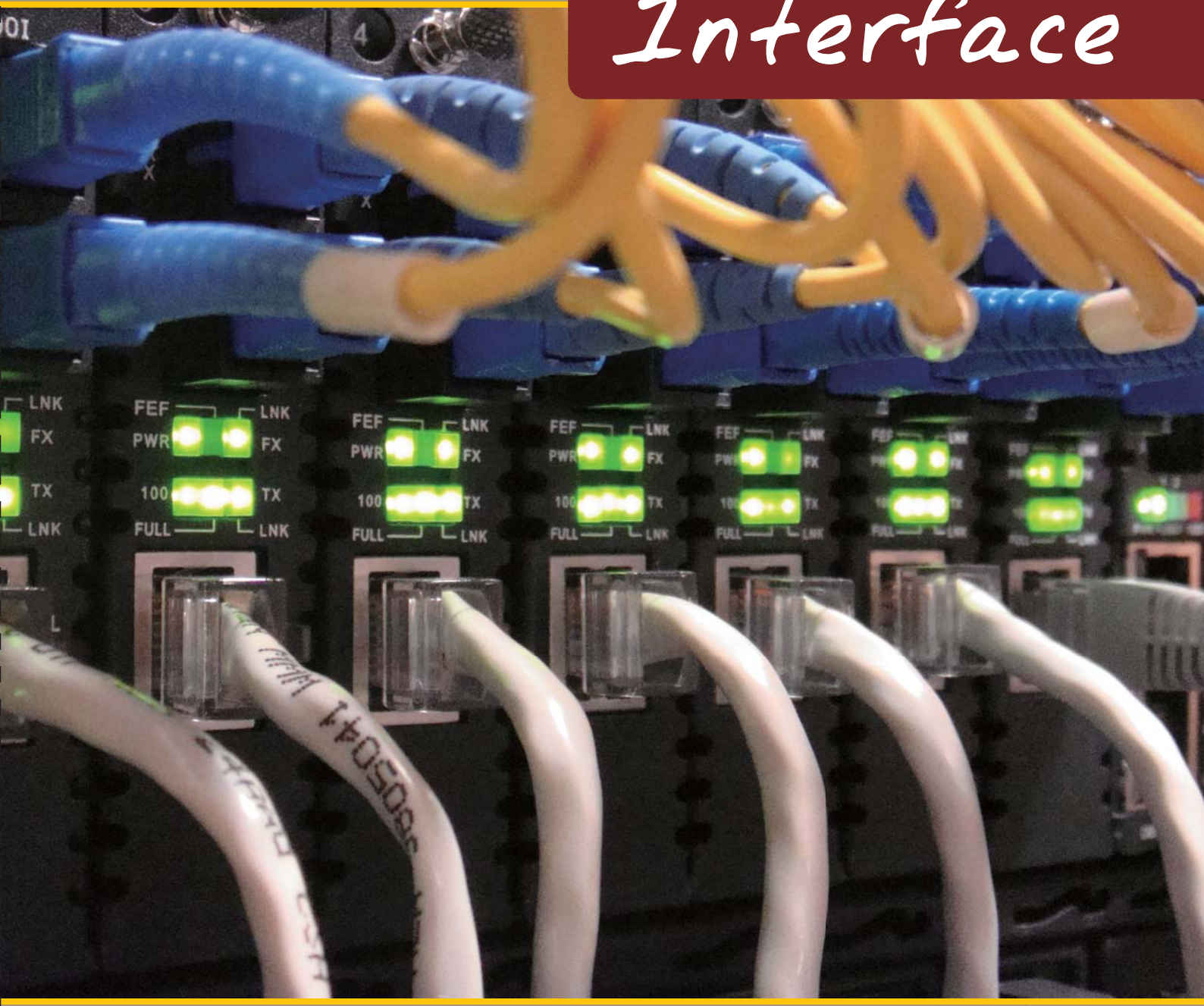

V35
RS232
RS485

TTL/CMOS

Current Loop

AsyncctoSync

Short Haul Modem

V.35 Interface Converter

V35 / Data

The V35IP family of interface converters allows full bi-directional synchronous conversion between V.35 and X.21 or RS-449/530 hardware. These converters all work WITHOUT an EXTERNAL POWER SUPPLY. The V35IP interface converters are designed for synchronous V.35 operation at data rates up to and including 2048kbps. They may also be applied to asynchronous V.35 using only TD & RD signals, while ignoring TC, RC, and XTC timing signals. Asynchronous V.35 requires three times greater data throughput on the synchronous side's X.21 or RS-449/530 interface. The physical connections for all V35IP family converters are DB25 female connectors and V.35 adapter cable. The V.35 side requires the supplied DB25 to MB34 adapter cable to connect directly to V.35 equipment

Features

- Electrically converters SYNC ITU-T V.35 to RS-530 / RS-449 / X.21 (three models)
- DCE/DTE switch selectable
- Data rate up to 2.048Mbps
- Complies with ITU-T V.35, X.21 and EIA RS-449, RS-530
- Interface powered, no external DC power required for the "IP" converter family
- An external power adapter (9VDC@600mA) may be used if the application of the unit is in a poor communication environment

Data rate	Up to 2Mbps
Connector	DB25F with V.35, X.21, RS530, RS449 cable adapter
Indications	PWR, Signal status, DCE/DTE mode
Power Input	9VDC
Power Consumption	< 5W
Dimensions	140 x 80 x25mm (D x W x H)
Weight	150g
Temperature	0°C ~ 50°C (Operating), -10°C ~ 70°C (Storage)
Humidity	10~90% non-condensing

V35 to X21/RS449/530 Application

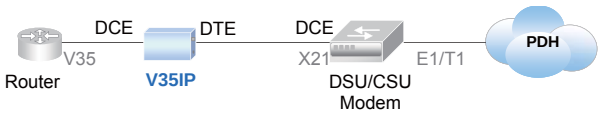

Ordering Information

V35/ □□□□□ Model Type

530IP : V35 to RS530
449IP : V35 to RS449
X21IP : V35 to X21

Example: V35/530IP

RS485 Interface Converters

V35 / 485-1

The V35/485-1 Interface Converter provides conversion between V.35 and RS-485 standard interfaces. The V.35 interface connection is via a supplied adapter cable and the unit's DB-25 female connector, while the RS-485 side's connection is via a five screw terminal block. The V35/485-1 converter's circuitry provides a high degree of electrical isolation between the V.35 and RS-485 sides. The V.35 side may operate as DTE or DCE, switch selectable, has provisions for establishing hardware flow control, and has LEDs to indicate data transmission and reception. The RS-485 side may operate in either two wire half duplex or four wire half full duplex.

Features

- Electrically converts SYNC V.35 to RS-485
- RS-485; 2 or 4 wire, Half or Full Duplex
- V.35 handshaking; DTR/DSR, RTS/CTS or Auto
- 2500V electrical isolation minimum
- DTE/DCE switch selectable
- Easy to configure
- External DC power required

Data rate	Up to 2Mbps
Connector	V.35: DB25F with adapter cable RS485: 5 screw terminals block
Indications	LEDs (TX/RX on 485 side and TD/RD on V.35 side)
Power Input	DC 9V in via AC adapter
Power Consumption	< 6W
Dimensions	140 x 80 x25mm (D x W x H)
Weight	150g
Temperature	0°C ~ 50°C (Operating), -10°C ~ 70°C (Storage)
Humidity	10~90% non-condensing

V35 to RS485 Application

Ordering Information

V35/ □□□□□ Model Type

485-1 : V35 to RS422/485

Example: V35/485-1

RS232 Interface Converter

RS232 / Data

The RS232IP family of interface converters allows full bi-directional synchronous conversion between RS-232C (V.24) and V.35, X.21 or RS-449/530 hardware. These converters all work WITHOUT an EXTERNAL POWER SUPPLY. The RS232IP interface converters are designed for synchronous RS-232 operation at data rates up to and including 128kbps. They may also be applied to asynchronous RS-232 using only TD & RD signals, while ignoring TC, RC, and XTC timing signals. Asynchronous RS-232 requires three times greater data throughput on the synchronous side's V.35, X.21 or RS-449/530 interface. The physical connections for all RS232IP family converters are DB25 female with standard pin out, while a cable adapter is required for V.35, X.21 or RS-449/530 side. All three models may be interchanged as long as the correct V.35, X.21 or RS-449/530 cable is applied.

Features

- Electrical SYNC RS-232 interface converter to V.35 / RS-449 / X.21 (three models)
- Interface powered, no external DC power required for the "IP" converter family
- DCE/DTE switch selectable
- Data rate up to 128Kbps
- Complies with EIA RS-232, RS-449, RS-530 and ITU-T V.35, X.21
- An external power adapter (9VDC@600mA) may be used if the application of the unit is in a poor communication environment

Data rate	Up to 128Kbps
Connector	DB25F with V.35, X.21, RS530, RS449 cable adapter
Indications	LEDs (PWR, Signal status, DCE/DTE mode)
Power Input	9VDC
Power Consumption	< 5W
Dimensions	140 x 80 x25mm (D x W x H)
Weight	150g
Temperature	0°C ~ 50°C (Operating), -10°C ~ 70°C (Storage)
Humidity	10~90% non-condensing

RS232 to V35/X21/RS449/RS530 Application

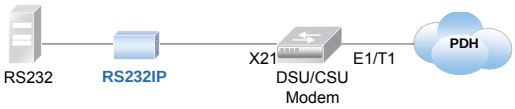

Ordering Information

RS232/ □□□□□ Model Type

V35IP : RS232 to V35
RS449IP : RS232 to RS449
X21IP : RS232 to X21

Example: RS232/V35IP

RS232 Interface Converter

V35IP-CAB

The V35IP-CAB interface converter allows full bi-directional synchronous conversion between RS-232C (V.24) and V.35 hardware. These converters all work WITHOUT an EXTERNAL POWER SUPPLY. The V35IP-CAB interface converter is designed for synchronous RS-232 operation at data rates up to and including 128kbps. It may also be applied to asynchronous RS-232 using only TD & RD signals, while ignoring TC, RC, and XTC timing signals. Asynchronous RS-232 requires three times greater data throughput on the synchronous side's V.35 interface. The physical connections for the V35IP-CAB converter is a DB25 female with standard pin out in DTE or DCE, while a cable is molded with MB34 connector for V.35.

Features

- Electrical SYNC RS-232 interface converter to V.35
- Interface powered, no external DC power required for the "IP" converter family
- DCE and DTE separate models
- Complies with EIA RS-232 and ITU-T V.35
- RS-232 pin 9 may be used to provide 5~9VDC external power if the application of the unit is in a poor communication environment

Data rate	Up to 128Kbps
Power Input	DC power acceptable (RS232 DB25 Pin 9)
Power Source	RS232 Interface powered or external AC adapter
Indications	LEDs (TD, RD)
Power Consumption	< 5W
Dimensions	53 x 75 x 22mm (D x W x H)
Weight	500g
Temperature	0°C ~ 50°C (Operating), -10°C ~ 70°C (Storage)
Humidity	10~90% non-condensing

Convenient Cable Solution

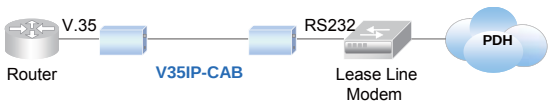

Ordering Information

V35IP-CAB □□□□□ Model Type

DCE : RS232 DTE to V35 CAB-DCE
DTE : RS232 DCE to V35 CAB-DTE

Example: V35IP-CAB-DCE

V.35 to RS485 Interface Converter

IC485-3

The ic485-3 Interface Converter provides asynchronous conversion between RS-232 interface and RS-485 standard interface. The RS-232 interface connection is via the unit's DB-25F female connector, while the RS-485 side's connection is via a five screw terminal block. The ic485-3 converter's circuitry provides a high degree of electrical isolation between the RS-232 and RS-485 sides. The RS-232 side may operate as DTE or DCE, has provisions for establishing hardware flow control, and has LEDs to indicate data transmission and reception. The RS-485 side may operate in either two wire half duplex or four wire half or full duplex and also has LED's to indicate data transmission and reception.

Features

- Electrically converts RS-485 to RS-232
- RS-485; 2 or 4 wire, Half or Full Duplex
- Supports optical isolation, electrical isolation of 2500V minimum
- DTE/DCE switch selectable
- Data rate up to 128Kbps
- External DC power required
- RS-232 handshaking; DTR/DSR, RTS/CTS or Auto

Serial Control Application

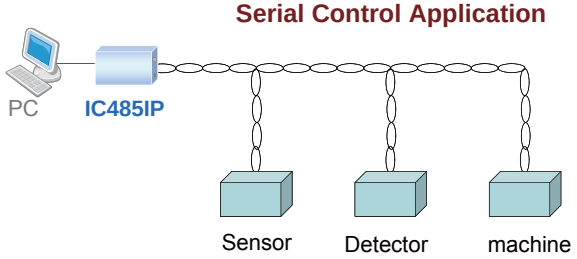

Data rate	1200, 2400, 4800, 9600, 19.2K, 38.4K, 57.6K, 115.2K or 128K
Connector	RS232: DB25F with adapter cable RS485: 5 screw terminals block
Indications	LEDs (TX/RX on 485 side and TD/RD on RS232 side)
Power Input	9VDC
Power Consumption	< 6W
Dimensions	140 x 80 x25mm (D x W x H)
Weight	180g
Temperature	0°C ~ 50°C (Operating), -10°C ~ 70°C (Storage)
Humidity	10~90% non-condensing

Ordering Information

ic485- □□□□□ Model Type

3 : RS232 to RS422/485 Terminal block 5 wires

Example: ic485-3

Async RS232 to RS422/ RS485, RJ-45 Interface Converter

IC485IP

The ic485IP Interface Converters provide asynchronous conversion between RS-232 interface and RS-485 standard interface. The RS-232 interface connection is via the unit's DB-25 female connector, while the RS-485 side's connection is via either a five screw terminal block or an RJ-45. The ic485IP converter's circuitry is not electrically isolation between the RS-232 and RS-485 sides. The RS-232 side may operate as DTE or DCE, has provisions for establishing hardware flow control, and has LEDs to indicate data transmission and reception. The RS-485 side may operate in either two wire half duplex or four wire half or full duplex and also has LED's to indicate data transmission and reception.

Features

- Electrically converts ASYNC RS-232 to RS-485/422
- Baud rate up to 128kbps
- DCE/DTE switch selectable
- RTS/CTS control, full/half duplex
- Simulation/monitor select switch

RS485 to RS232 Application

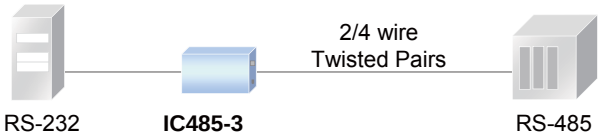

Data rate	Up to 128Kbps
Connector	RS232: DB25F RS485: 4 screw terminals block (ic485IP-1) RS485: RJ-45 connector (ic485IP-2)
Indications	LEDs (TD, RD, External DC Power)
Power Input	Interface Powered or External DC 9V in
Power Consumption	< 5W
Dimensions	ic 485IP-1: 54 x 76 x20mm (D x W x H) ic 485IP-2: 54 x 56 x 20mm (D x W x H)
Weight	60g
Temperature	0~50°C (Operating) ,0~70°C (Storage)
Humidity	10~90% non-condensing

Ordering Information

ic485IP- □□□□□ Model Type

1 : RS232 to RS422/485 Terminal block 4 wires

2 : RS232 to RS422/485 RJ45

Example: ic485-IP-1

Async RS232 short haul modem

IC232IP

The ic232IP, asynchronous, Short Haul Modem, overcomes the limited distances of the RS-232 standard by converting DCE/DTE equipment to full duplex 2 twisted pair wire (Category 3 or better). This series of converters works without any external power supply. The ic232IP-SM operates up to 10 Km depending on the wire gauge and data rate.

Features

- Extend ASYNC RS-232 up to 10km depending on wire gauge and data rate
- Interface powered, no external DC power required for the "IP" converter family
- Full Duplex over 2 twisted pairs (Cat. 3 or better)
- Baud rate up to 128Kbps
- DCE/DTE switch selectable

Data rate	Up to 128Kbps
Connector	Ic232IP-SM: Async RS232: DB25F, modem side:RJ45 Ic232IP-2: Async RS232: DB25F, modem side: 4 screw terminal with Ground pin
Indications	LEDs (TD, RD)
Power Input	Interface Powered
Power Consumption	< 5W
Dimensions	ic 232IP-SM: 54 x 56 x 20mm (D x W x H) ic 232IP-2: 54 x 76 x 20mm (D x W x H)
Weight	50g
Temperature	0°C ~ 50°C (Operating), -10°C ~ 70°C (Storage)
Humidity	10~90% non-condensing

RS232 Short Haul Modem Application

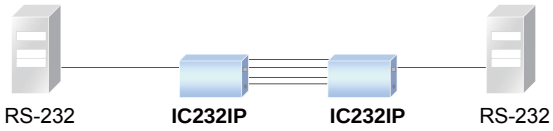

Ordering Information

ic232IP- □□□□□ Model Type

SM : RS232 short haul modem, RJ45

2 : RS232 short haul modem, Terminal block 4 wires

Example: ic232IP-SM

RS232, Current Loop Converter

icCL-2

Current loop devices use current on or current off to transmit binary digits. The icCL converter interfaces RS-232 systems to 20mA or 60mA current loop ports with open circuit voltages up to 30 V. All the units are very easy to implement. Simply connect the appropriate interface cable and select the DCE/DTE type.

Features

- Electrically converts ASYNC RS-232 to Current Loop
- Full duplex, 19.2kbps to 400ft
- Baud rate up to 128kbps
- Current Loop connection by 4 screw terminal
- DCE/DTE switch selectable
- 20/60mA switch selectable
- External DC power required

Data rate	Up to 128Kbps
Connector	RS232: DB25F or DB25M Current loop: 4 screw terminal block
Indications	LEDs (TD, RD)
Power Input	9VDC
Power Consumption	< 6W
Dimensions	54 x 76 x 20mm (D x W x H)
Weight	60g
Temperature	0°C ~ 50°C (Operating), -10°C ~ 70°C (Storage)
Humidity	10~90% non-condensing

RS232 Current Loop Application

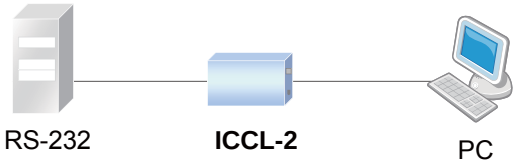

Ordering Information

icCL- □□□□□ Model Type

2 : RS232 Current loop, Terminal block 4 wires

Example: icCL-2

RS232 to TTL/CMOS Interface Converter

ic232TTL

The ic232TTL converts RS-232 to TTL/CMOS compatible level. Two channels are used to convert from RS-232 to 0/+5 VDC signals, and two channels are used to convert from 0/+5 VDC signals to RS-232. Therefore, this converter supports TD, RD, RTS, and CTS. The RS-232 side is a DB9 female connector while the TTL/CMOS side is a DB9 male connector. This unit is powered from the RS-232 data and handshake lines whether the lines are high or low and may work at baud rates up to 115.2kbps. The handshaking lines (pins 7[RTS] and 4[DTR]) may be in either a high or low condition, but must be present to power the converter. It is important that TTL/CMOS logic, and only TTL/CMOS logic (0 to +5 VDC) be used for the TTL/CMOS side of the converter. The maximum sinking current for one TTL/CMOS output is 3.2 mA. The maximum source current for one TTL/CMOS is 1 mA. Signal levels are inverted by the converter.

Features

- Electrically converters ASYNC RS-232 to TTL/CMOS level
- Interface powered, no external DC power required for this converter
- RS-232 DB9F connects directly to PC COM port
- TTL/CMOS level connects directly to embedded system's UART
- Baud rate up to 115.2k

TTL / CMOS Input	***RS232 Output***
Low (< +0.8V)	+5V minimum, +9V typical
High (> +2V)	-5V minimum, -9V typical
TRS232 Input	***TTL / CMOS Output***
Low < +0.8V & > -15V	+3.5V minimum, +4.6V typical
High > +2V & <+15V	+0.4V minimum, +0.1V typical
Weight	20g
Dimension	60 x 31 x15mm (D x W x H)

RS232 Current Loop Application

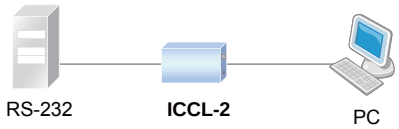

Ordering Information

ic232TTL : RS232 to TTL/CMONS

Asynchronous RS232 to Synchronous (HDLC)

icAS/IP

The icAS/IP, interface converter allows full conversion between a computer / terminal RS-232 asynchronous port and a synchronous modem. The icAS/IP conforms to the ITU-T V.22 standard and accommodates the difference in frequency between the asynchronous port and synchronous modem. This unit derives its baud rate automatically from the transmit clock of the modem and operates at data rates from 300 to 19200bps.

Features

- Convert ASYNC RS-232 to SYNC (HDLC) V.22 protocol
- Automatically adjusts baud rate
- Baud rate up to 19.2kbps
- Fully transparent to signals
- Function set by dip switch
- Interface powered, no external DC power required for the "IP" converter family
- An external power adapter (9VDC@600mA) may be used if the application of the unit is in a poor communication environment

Data rate	300 ~ 19200bps
Connector	RS232: DB25F or DB25M with adapter cable
Standard	ITU-T V.22
Indications	LEDs (Power, link)
Power Input	9VDC
Power Consumption	< 5W
Dimensions	54 x 73 x 20mm (D x W x H)
Weight	150g
Temperature	0°C ~ 50°C (Operating), -10°C ~ 70°C (Storage)
Humidity	10~90% non-condensing

Async to Sync Application

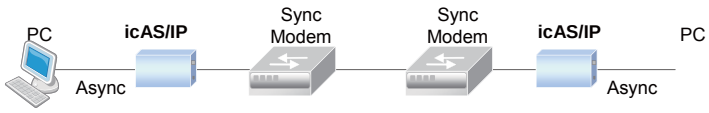

Ordering Information

icAS/IP : Async to Sync converter V.22 protocol

DTMF to Pulse Converter

DTMF

The DTMF to PULSE Dialing Converter is an electronic device used to convert the DTMF tones from telephone, modem, or fax equipment to standard telephone pulses. Connecting the device is very easy. Simply connect between the tone source device and the phone line. Received tones are held in buffer and output as pulses after 3 seconds of not receiving any more tones.

Features

- Receives DTMF tones from POTS and outputs pulses
- Powered from the telephone line
- Detects DTMF tones
- 32 character buffer
- 20 second time-out will cease any conversion
- Pulse dialing rate factory settable for 10pps or 20pps
- Make/break ratio factory settable for 40/60 or 33.3/66.6

Connector	2 x RJ11
Indications	LEDs (Wake-Up)
Pulse dialing rate	10pps (default) or 20pps
Make/Break ratio	40:60 (default) or 33.3:66.6
Dimensions	135 x 79 x 25mm (D x W x H)
Weight	150g
Temperature	0°C ~ 50°C (Operating), -10°C ~ 70°C (Storage)
Humidity	10~90% non-condensing

DTMF to Pulse Dialing Application

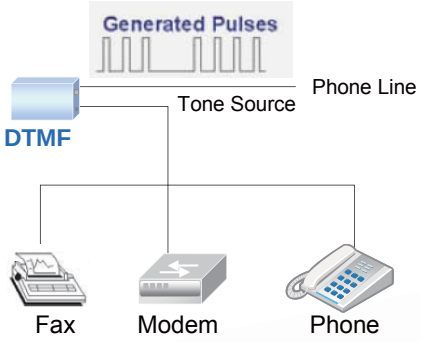

Ordering Information

DTMF : DTMF to Pulse dialup converter

Chapter 7.

Management

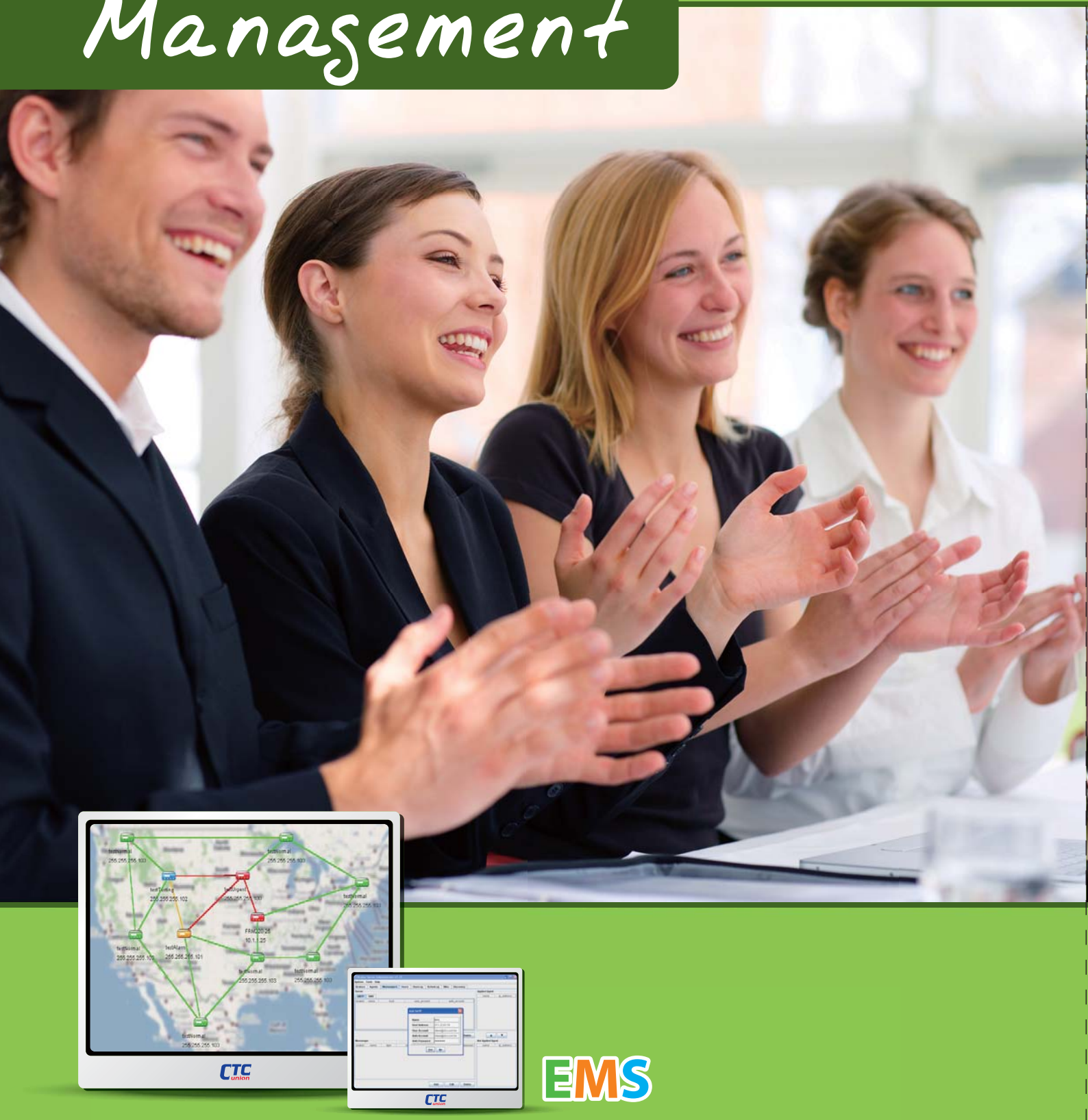

GUI

Element Management System

EMS

The objective of EMS is to provide four major functions for telecommunication operators:

- Fault Management (FM)
- Performance Management (PM)
- Configuration Management (CM)
- Security Management (SM)

The EMS Server is designed to provide all the configuration and maintenance functions for the communication device. The method to access EMS Server functions is via CORBA protocol according OMG CORBA Specification. When a user loads EMS Client software and sets up a link to the EMS Server, it will be possible to monitor and control all network devices via CORBA actions. EMS Server uses SNMP Protocol to monitor and control the network devices via SET GET and TRAP SNMP actions.

The major tasks include:

1. Collect configuration information from SNMP Agents via SNMP protocol and send to them control commands to change their state.
2. Guarantee storage of all information in external database server
3. Transfer control and configuration data to and from client SW via CORBA
4. Organize and maintain control objects in database and client configuration constructions, which describe system.
5. Provide role access to mentioned above objects

Network Scheme Diagram

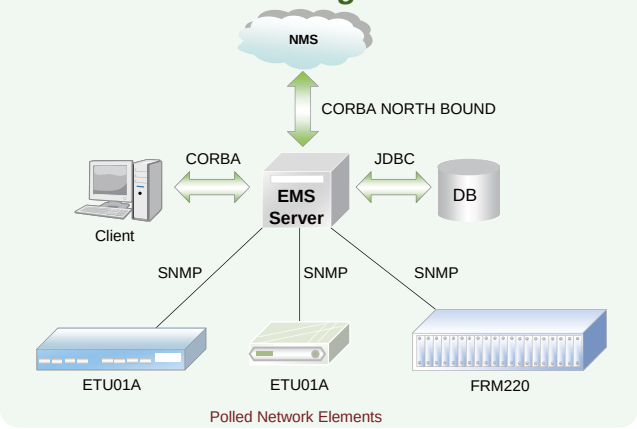

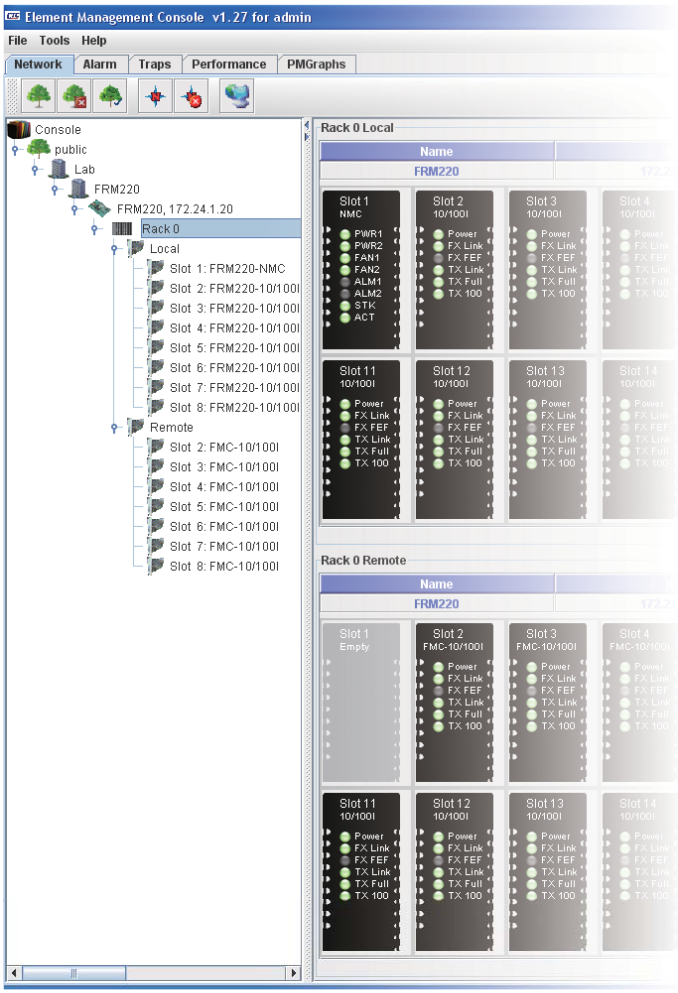

Agents

By utilizing a modular design, a large variety of configurations may be realized and the unit may be custom tailored for each specific application.

CORBA Server

CORBA Name Service provides the ORB (Object Request Broker) central component of CORBA. It encompasses the entire communication infrastructure necessary to identify and locate objects, handle connection management, deliver data and is responsible for communication of requests.

Broker server

Broker Server collects the information data from the specific SNMP agents and keeps updating it to the SQL server via the JDBC (Java DataBase Connectivity) driver.

SQL Server

SQL Server is the place where the Broker collected data is stored, the database will store Alarm Trap and all informations. CTC Union's EMS is compafible with MS-SQL 2000, 2005 and MS-SQL 2005 Express.

Workstation-Clients

Workstations act as clients in the CORBA architecture. They provide the JAVA applet GUI to monitor and control the agents at far end. They also receive the Alarm Traps from the corresponding SNMP AGENTS. Multiple workstations are allowed in this field.

Configure Command Tool Bar

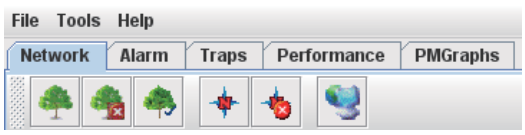

Features

- **JAVA based**
  EMS is pure JAVA project and collects all benefits of this technology including multi platform support, module design, and client-server architecture.

- **Event driven**
  Using events as primary objects for communication minimizes network loading, increases performance and allows including a given quantity of network devices with predictable CPU and RAM loading, depending on this quantity.

- **Open architecture**
  Provides API and IDL files for integration with upper layer systems.

- **Database support**
  Support for microsoft SQL Server 2000,2005&2005 Express Flexible SQL interface design for server and client optimization by customer.

- **Data integrity**
  All data is located in the same place. User profiles are stored to and loaded from one source. User created objects are stored and loaded remotely and/or locally. There are well-defined procedures for backup and restore configuration, topology, alarm and user data.

- **Standard SNMP and CORBA support** Design has no assumption to any CORBA vendor. Tested with different Object Request Brokers.

Topology

Getting Topology Map node

User can load maps to SQL server, load maps from SQL server or delete attached maps. Download procedure is very simple.

Map area may be used to layout any objects from Root and Node panel.

Using drag-and-drop, put any object to map area. Any label or network element location name may be added to object. Objects in red color indicate some alarm condition is present in the device. Right clicking an object brings a popup window to select Telnet or Http management directly.

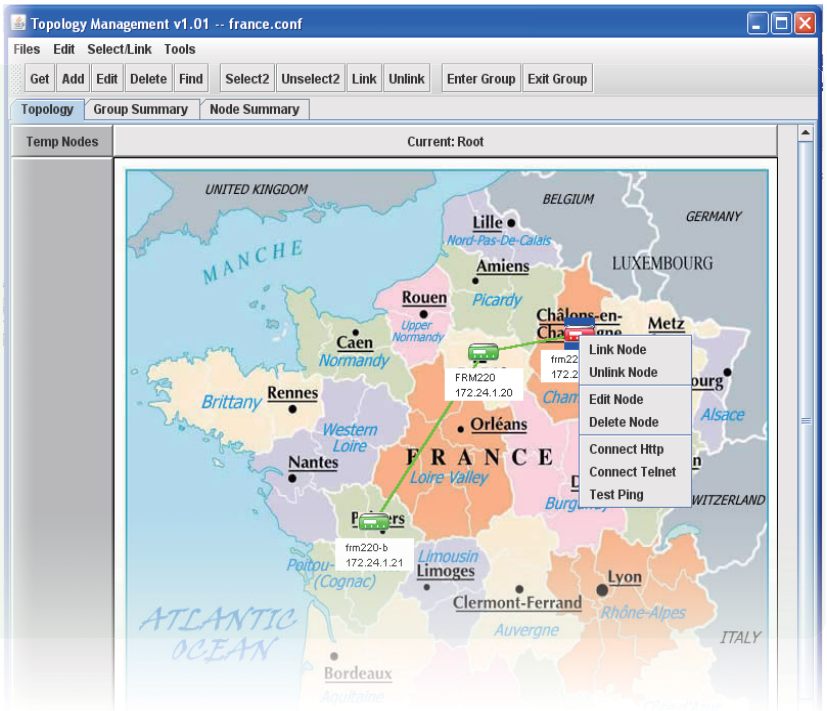

Requirements

Available models:

ETU01A, ERM01, FMUX01A, FMUX01A/Plus & FRM220

EMS	Hardware	Software	Operating System
Broker Server	P4 1.6G or higher, 512MB RAM, HD >2GB (free)	JAVA JRE. EMS Kit, ODBC Driver	Windows, Linux, BSD
SQL database Server	P4 1.6G or higher, 512MB RAM, HD >2GB (free)	MS-SQL Server 7.0 (or MS-SQL 2000) EMS Kit.	Windows 2000 Pro or Server, Windows 2003 Server, Windows XP, Vista
CORBA Server	PIII 800 or higher, 128MB RAM, HD >1GB (free)	JAVA JRE. EMS Kit	Windows, Linux, BSD
Workstation- Clients	PIII 800 or higher, 128MB RAM, HD >1GB	JAVA JRE. EMS Kit	Windows, Linux, BSD
All-In-One	P4 2.8G or higher, 1GB RAM, HD >10GB (free)	JAVA JRE, EMS kit, MS-SQL Server, ODBC Driver	Windows 2000 Pro or Server, Windows 2003 Server, Windows XP, Vista

Element Management System

EMS Management Functions

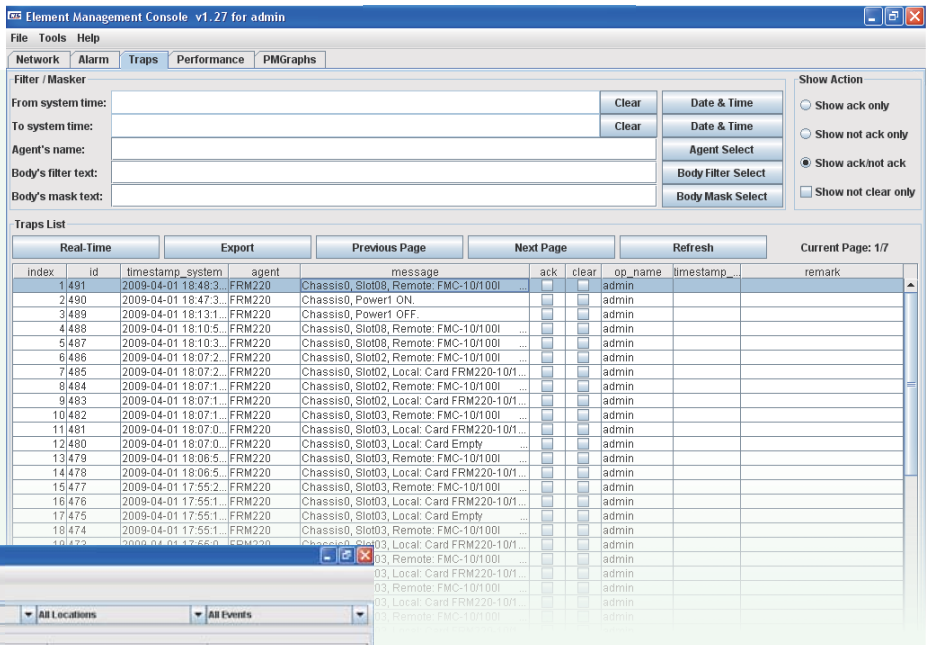

Fault Management

Trap List

All alarm traps will be stored in SQL database. In Traps page, press "Auto Refresh" button to get the current alarm trap records in database, and it will update status automatically. Press "Pause" button to halt the screen, then, operator can make "ack" or "clear" action. Press "refresh and save file" to get the current alarm trap records in database and save to "TrapList.txt" file in disk.

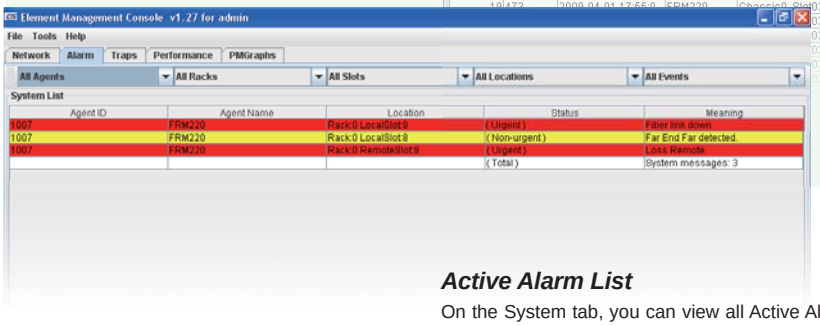

Active Alarm List

On the System tab, you can view all Active Alarm Lists. Three kinds of filters can be applied to alarm list. User may select one agents, local or remote rack, and specific status as filters to watch active alarms. The status filter can be categorize Urgent, Non-urgent, Event, Empty (don't show), and all statuses label or network element location name may be added to object .

Security

Activity Log

All activities performed on any Network Element are logged with time-stamping, the user making changes and the changes made.

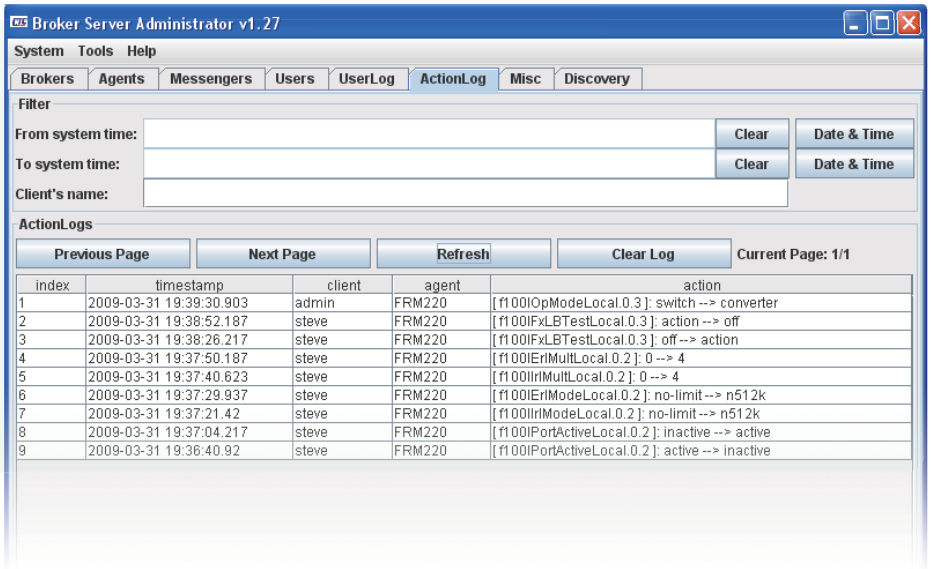

Management & Alerts

Network Element Discovery

The EMS has a tool for automatically discovering SNMP agents on the network. Simply enter an IP address range and the discovery program will ping every IP address looking for SNMP agents. Once discovered, the agents can be selected and brought into the broker for polling.

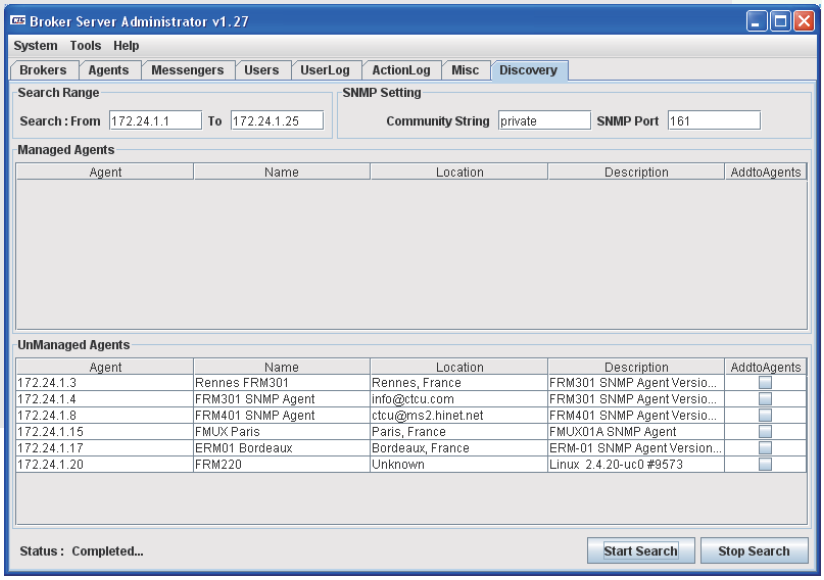

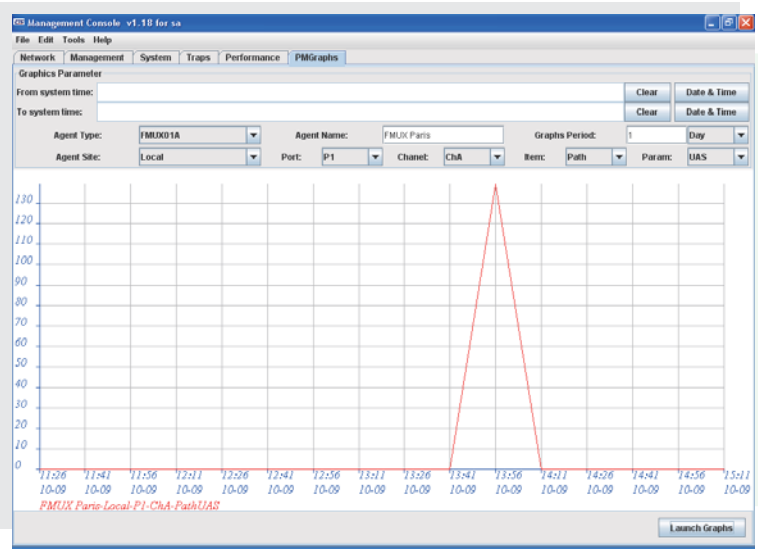

Performance Monitoring

Device performance is plotted over time using standard PM data such as ES, UAS, etc. PM data is typically only available for PDH devices such as the ETU01A and ERM01.

Alarms sent by E-mail & SMS

The EMS is capable of sending emails and or SMS text messages to selected administrators when critical alarms occur. Prompt notification of system problems aid in getting problems in the network fixed in the shortest time possible.

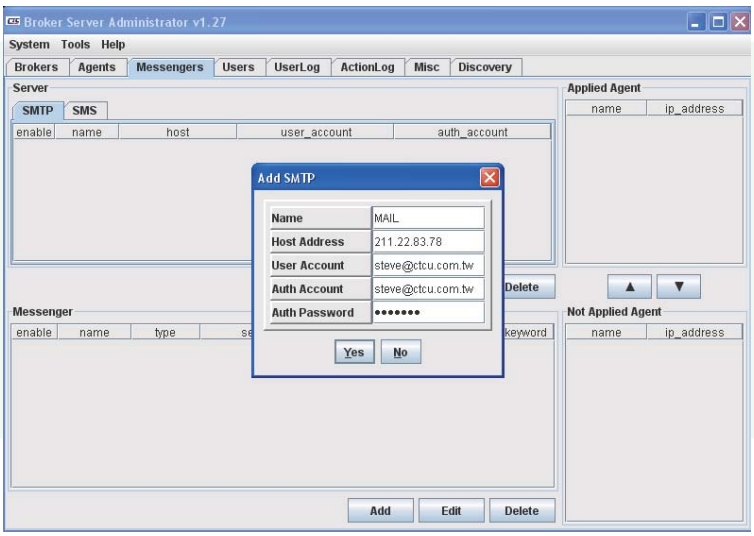

Windows Based Management Software

Graphical User Interface

FRM301, FRM401

Minimal setup, maximum uptime and optimum security are the goals of every network manager. To achieve these goals, network management systems must support various important functions :

1. Fault management - correlates fault management data from all network devices, solates faults and initiates recovery actions
2. Configuration management
3. Performance management

CTC Union develops a perfect solution for the above managements. The intelligent NMS provides the support that the network manager needs. It consists of three parts :

1. Terminal mode: Configuration by local RS-232 serial port; Maintenance & alarm
2. MIB file SNMP: Configuration by RJ-45 10/100 Ethernet port; Complies with MIB-II standard
3. GUI SNMP: Configuration by RJ-45 10/100 Ethernet port; Real time monitoring & trap alarm in Window® graphic mode

MIB File Browser

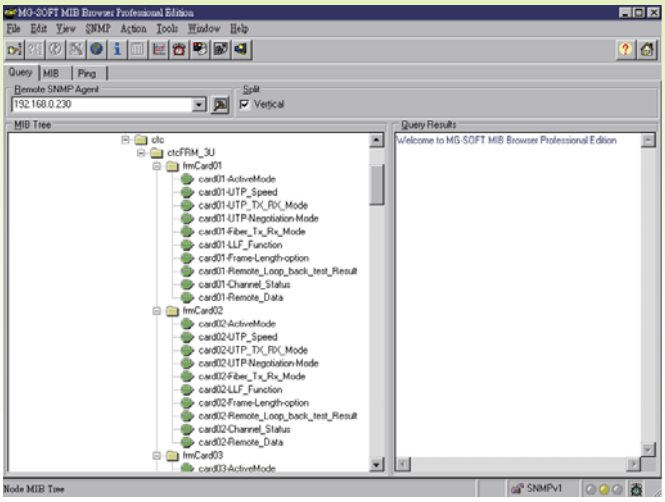

Terminal Mode

```
*************************************************************
*** CTC UNION TECHNOLOGIES CO., LTD  V4.06 -17[Oct. 28th]  ***
*** FRM-301 Fiber Optical Media Converter Rack Management  ***
*************************************************************
Main Menu and Rack Status:
  1:Slot #1 >> 10/100 Base << || 9:Slot #9  >> 10/100 Base <<
  2:Slot #2 >> 10/100 Base << || A:Slot #10 >> 10/100 Base <<
  3:Slot #3 >> E1 BNC      << || B:Slot #11 >> 10/100 Base <<
  4:Slot #4 >> E1 BNC      << || C:Slot #12 >> 10/100 Base <<
  5:Slot #5 >> SERIAL      << || D:Slot #13 >> 10/100 Base <<
  6:Slot #6 >> SERIAL      << || E:Slot #14 >> 10/100 Base <<
  7:Slot #7 >> V.35        << || F:Slot #15 >> 1000E       <<
  8:Slot #8 >> V.35        << || G:Slot #16 >> 1000 Base   <<
Command Function Key:
'1' to '9', 'A' to 'G': I/O Cards Setting
'P': Show Fans and Powers Status
'R': Refresh Status
'ESC' Logout
'M': Manager Configuration Setup
'S': System Configuration and TFTP Setup
Console:[On  line] Telnet:[Off line]    GUI:[Off line]
```

Main Screen

Accessed IPs are stored in the program

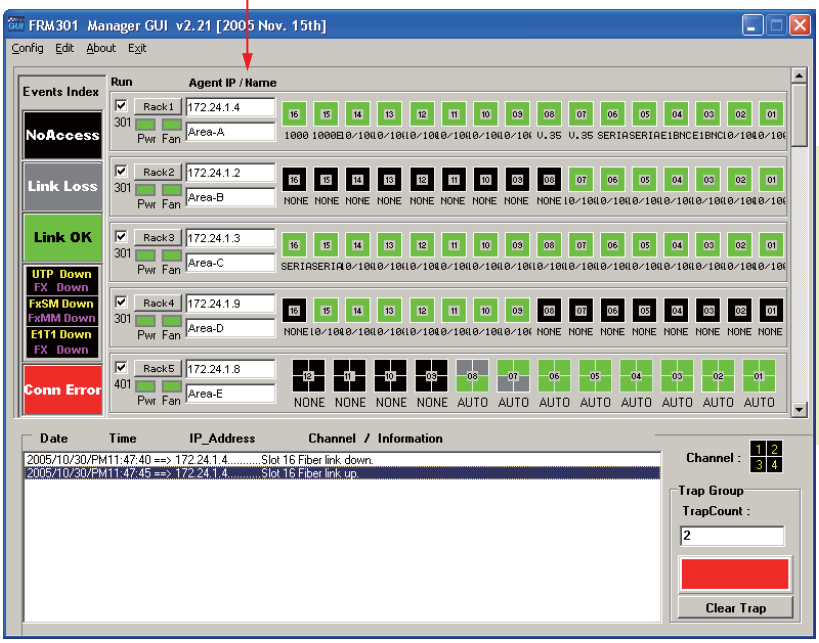

This main screen allows users to enter new or select existing IPs of all agents. When the IP is entered the list of available FRM301 / FRM401 chassis are displayed.

Features

- View which type of cards occupy the chassis slots
- Full Read/ Write capabilities
- Enable/ Disable individual cards or channels
- Monitor power module and fan assembly in the unit
- Alarm detection for each card, power module & fan assembly
- Poll readings
- Cards maintain their configuration even if the Management Module fails
- Fully compliant SNMP interface with Windows® 95/NT/98/2000/XP/Vista GUI
- Configuration settings up or download to/from management PC
- Loop-back test capability
- Get CPE status of remote side

FRM301 Rack View Screen

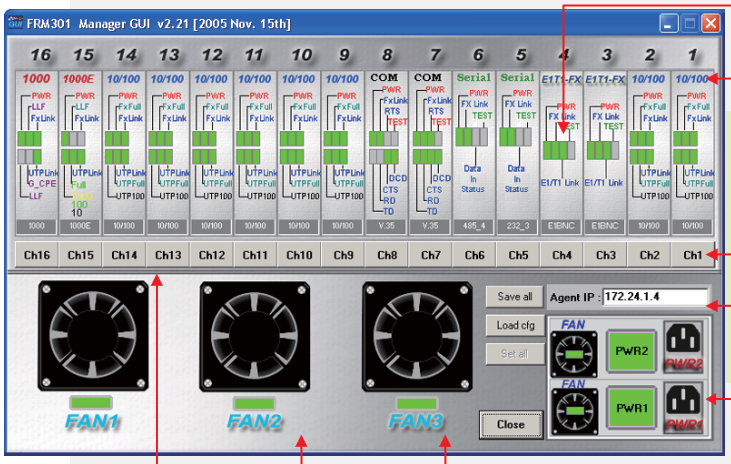

LEDs display actual status

Model name displayed

Click to view card

Accessed IP displayed

Redundant powers displayed

Cooling Fan displayed

Displays the selected chassis information. Each line card is displayed with LEDs and status in real time.

FRM401 Rack View Screen

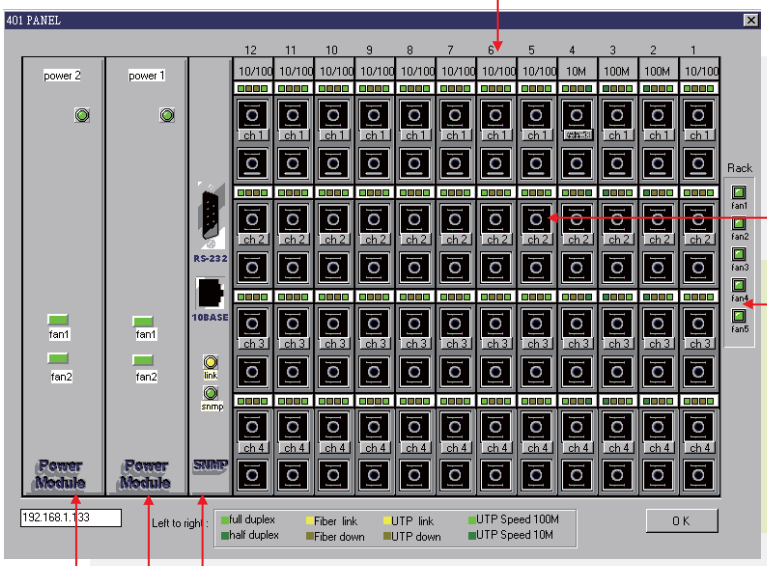

LEDs display actual status

Specific cards with connectors are displayed

Fan LEDs display

Displays the selected chassis information. Each line card is displayed with LEDs and status in real time.

SNMP card with connectors are displayed

AC/ DC Redundant power modules display

Accessed IP is stored in the program

Windows Based Management Software

Graphical User Interface

FRM301, FRM401

Fast Ethernet Line Card Setting

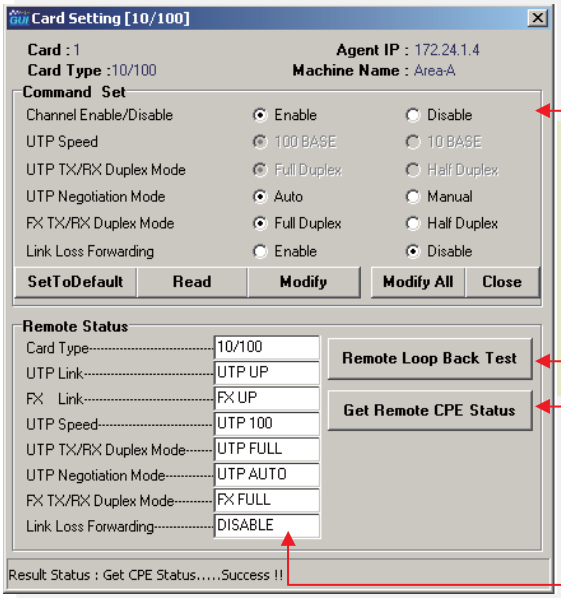

Edit line card status

Click for loop back test

Click for getting Remote CPE Status

Remote CPE Status displayed

An individual card can be highlighted by clicking on the converter of Chassis screen. A screen is displayed that allows the network administrator to edit the converter's configuration, get the remote unit's status or do loop back functions.

Gigabit Ethernet Line Card Setting

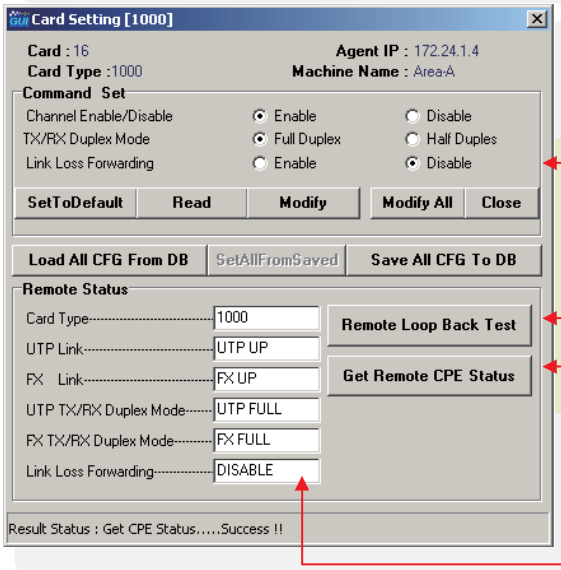

Edit line card status

Click for loop back test

Click for getting Remote CPE Status

Remote CPE Status displayed

Click the button for a 1000Base line card to view and configure the local line card. Under the GUI, the card's status, Tx/Rx Duplex mode and LLF function may be read or modified.

FRM301 E1/T1 Screen

Local & remote configuration

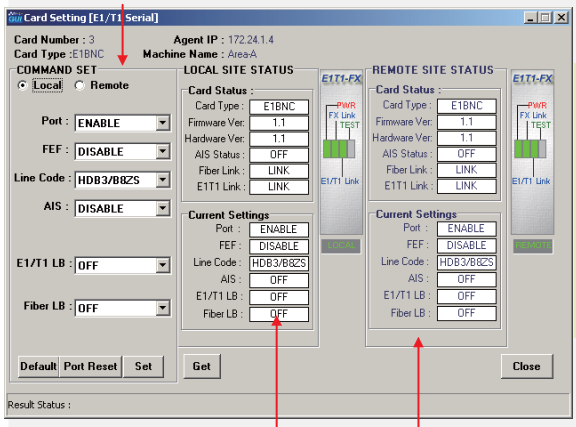

LEDs display actual status

Remote Status displayed

Local converter Status displayed

If an E1/T1 line card is installed in any slot, the status of the E1/T1 link, port settings and loop back functions may be viewed by clicking the channel button.

Windows Based Management Software

Graphical User Interface

FMUX01A

The FMUX01 GUI (Graphical User Interface) is a Windows® based program that uses SNMP protocol to monitor and configure the FMUX01 fiber multiplexer in an easy to use 'point & click' graphical environment. The user interface gives a graphical representation of the managed unit's LED status in real time and provides a 'trap window' to view any alarms generated by the FMUX01A.

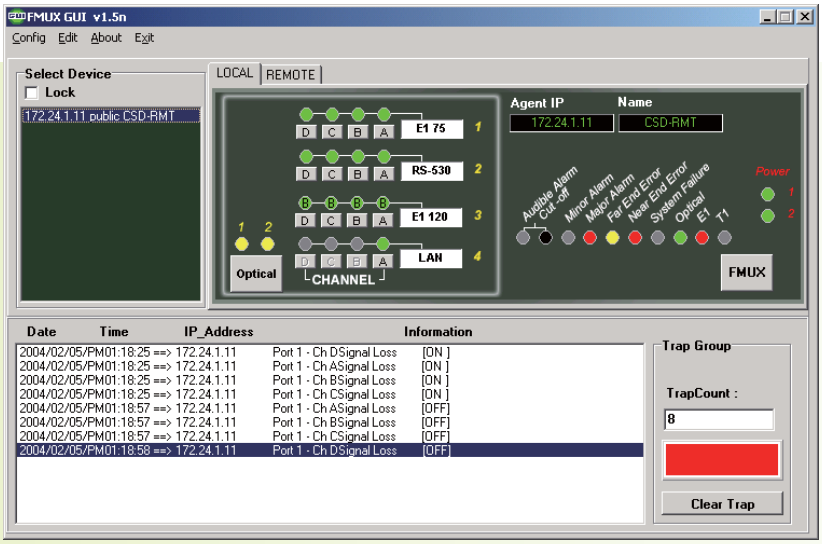

Main View of GUI

1. Select a device from the list
2. Select "Local" or "Remote"tab
3. View all channel status
4. View trapmessages in realtime

Example of Optical aggregate configuration and performance data view

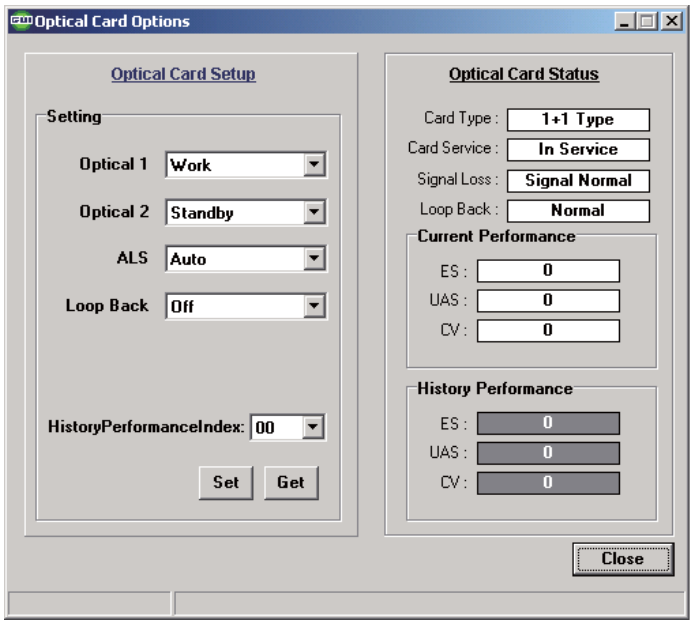

Example of E1/T1 tributary card's configuration and performance display

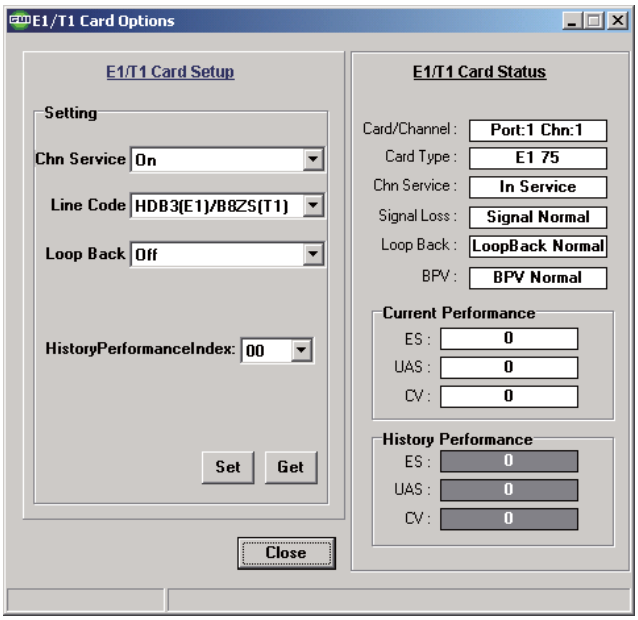

Windows Based Management Software

Graphical User Interface

FMUX01A/Plus

The FMUX01 GUI (Graphical User Interface) is a Windows® based program that uses SNMP protocol to monitor and configure the FMUX01 fiber multiplexer in an easy to use 'point & click' graphical environment. The user interface gives a graphical representation of the managed unit's LED status in real time and provides a 'trap window' to view any alarms generated by the FMUX01A.

FMUX01A/Plus GUI

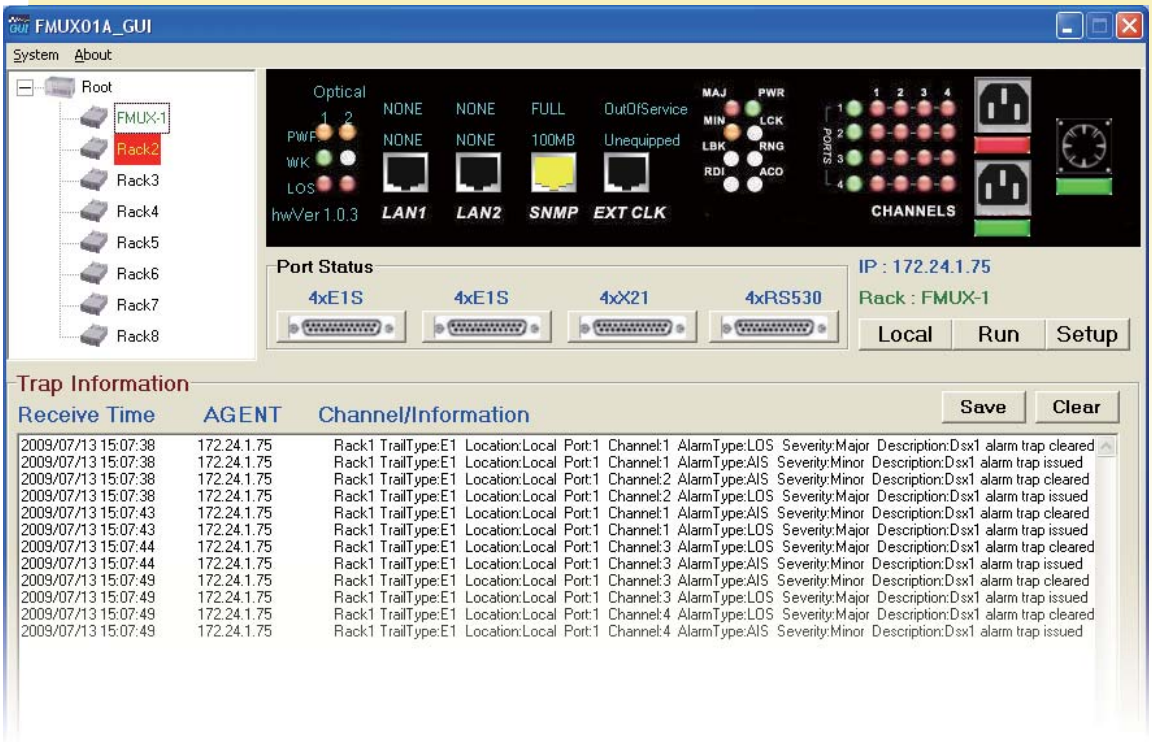

Example of Trap Information exported to Microsoft® Excel™ format (CSV)

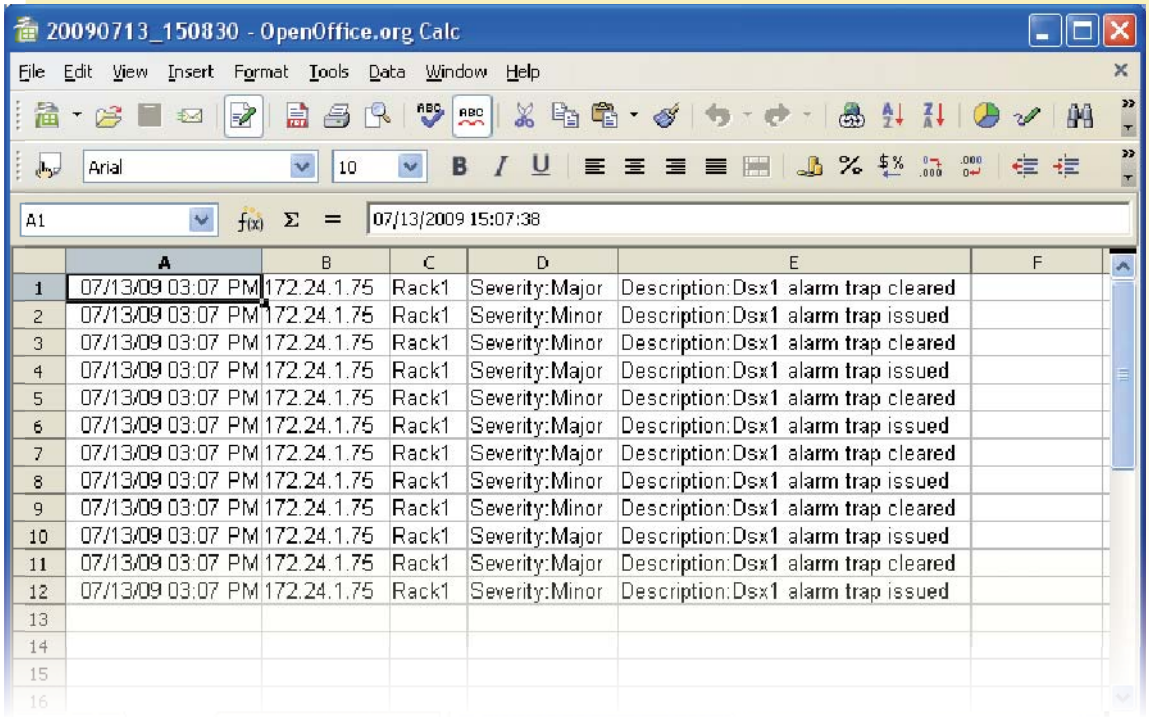

Chapter 8.

IP Surveillance

MPEG4 DVS

Network Camera

Embedded
License Plate Recognition

NVR
H.264/ Megapixel/ MPEG4

H.264 DVS
Encoder/Decoder

Chassis for IP Surveillance Series

IPS20

The CTC Union IPS20 is a 2U 19" rack with 20 slots for holding up to 20 interchangeable and hot-swappable CTC Union blades such as Digital Video Encoder and Fiber Media Converter. The power modules are designed for redundant power supply capability for reliable and professional installation. The IPS20 gives flexibility, scalability, and functionality to help construct a multi-task system.

Features

- 2U 19" 20 slots Chassis with AC/DC power redundancy
- Chassis mainboard consists of passive components
- All modules and cards support hot-swap function
- Two alarm relays
- Supports H.264 Digital Video Encoder blade Card
- Supports H.264 Digital Video Decoder blade Card

Physical Specifications

Dimension 303 x 438 x 88mm (W x D x H)
Weight 5.2kg without power supply

Power Characteristics

AC 100 ~ 240VAC
DC24 18 ~ 36VDC
DC48 36 ~ 75VDC

Environmental Specifications

Operating -10°C ~ 60°C
Storage -20°C ~ 70°C
Relative humidity 10% ~ 90% non-condensing
Predicted MTBF 75,000 hrs

Certification

FCC class A, VCCI class A, CE, RoHS

20-slot Multi-service Platform

Technologies Supported:

- DVS-8501E (1-slot, 1-ch H.264 digital video encoder)
- DVS-8501E-H blade Card (2 slots, 1-ch H.264 digital video encoder with hard disk)
- DVS-8504E-FD blade Card (2 slots, 4-ch H.264 digital video encoder)
- DVS-8501D blade Card (1 slot, 1-ch H.264 digital video decoder)
- Fiber Media Converter series products. (Refer to FRM220 series)

Thermal fan Holes

Chassis backplane consists of passive components

Hot swappable cooling fans

Single or optional redundant power supplies

Power Redundancy

All the IPS20 chassis power supplies are hot swappable and modular, installing two into a chassis provides redundancy should a single power supply fail. A fully loaded chassis can run continuously with only one power module fitted into the chassis.

Cooling Fan

To further increase system reliability, the IPS20 chassis is fitted with two hot swappable fan modules. Both fan modules can be easily removed from the rear of the chassis, without interruption to the operation of the line cards. A fully loaded chassis can run continuously with only one fan module fitted into the chassis

Multi-functional provider and true IP surveillance solution, the CTC IPS-20

The IPS-20 is designed for flexible and professional digital video blades deployment. When there's a multi-channels video encoder deployment demand, IPS-20 can hold up to 20 channels of CTC H.264 video encoder blade DVS-8501E or 10 channels of DVS-8501E-H to build up a centralized video surveillance system that provides high quality image with D1 resolution at 30/25 FPS each channel.

Held the latest CTC H.264 video encoder blade DVS-8504E-FD, which provides up to 4 channels video stream each blade, the IPS-20 gives an even larger professional surveillance configuration that provides 40 channels video streams under full D1 at the same time!

Besides the encoder, the IPS-20 can also hold up to 20 channels CTC H.264 video decoder blade, DVS-8501D, to make the diverse video distribution in the control room. With the capability of the DVS-8501D, the video data can be decoded back to analog format ad utilized on more existing security devices like DVR, Matrix distributor, TV Wall, and the legacy security monitor.

The hot-swappable feature makes the IPS-20 configuration even convenience when the system needs maintenance or repair. Users can just unplug the old blade and plug a new one directly to recover the video stream and minimize the system interrupted time.

In addition, a true IP surveillance cannot ignore the transmission task. The requirement of high volume data transmission is surging. The fiber optical will definitely become the transmission main tend in the near future. CTC makes the IPS-20 in universal design that enables it to hold CTC FRM series blades as well to help build up a multi-functional system with IP surveillance and transmission capability. IPS-20 gives you not only the professional IP surveillance deployment platform but also a real one-stop completed solution.

Ordering Information

IPS20-□□□□□ Chassis type

AC : 100 ~ 240 AC power card
DC24 : 18 ~ 36 DC power card
DC48 : 36 ~ 72 DC power card

Example: IPS20-AC

IP Surveillance Ethernet Fiber Ring Application

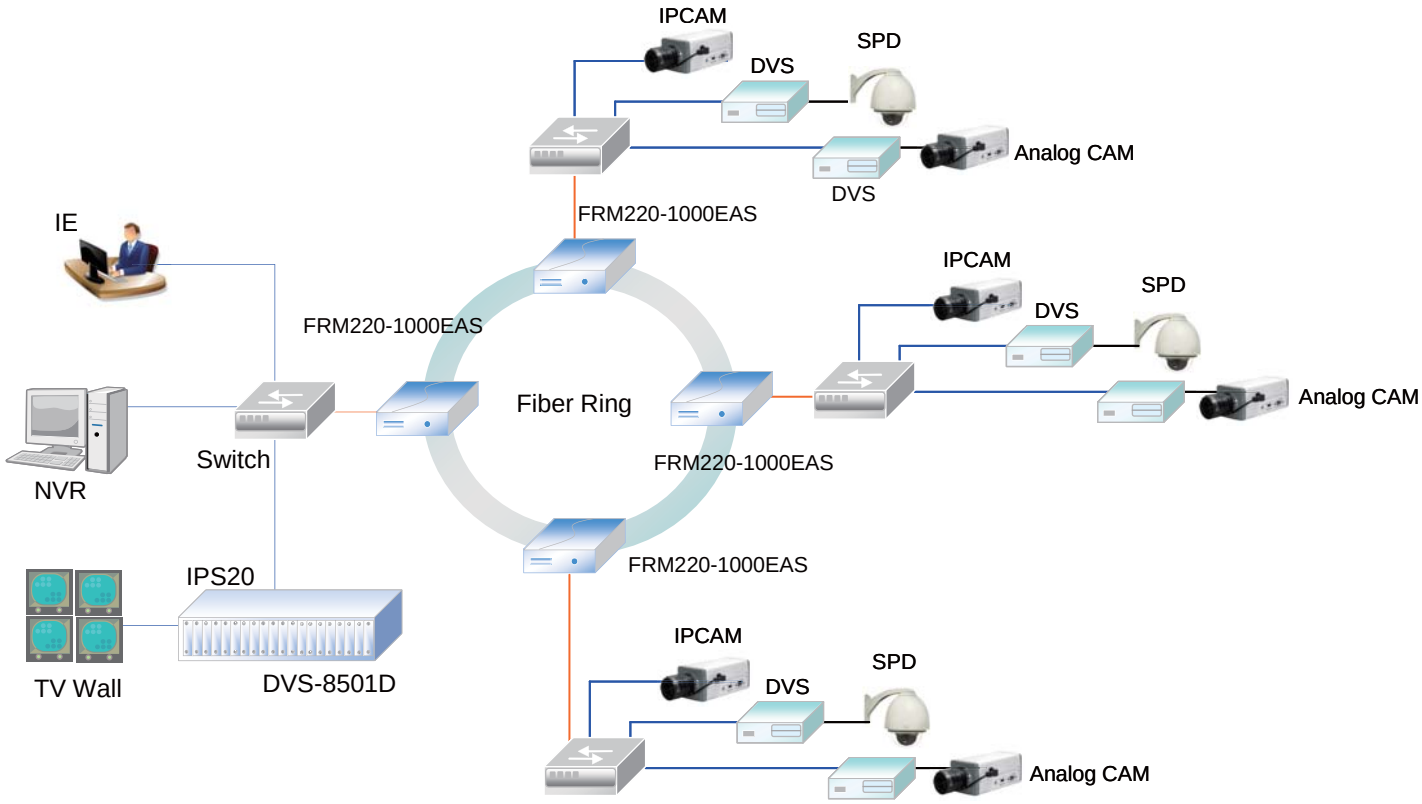

IP Surveillance Ethernet over Fiber Application

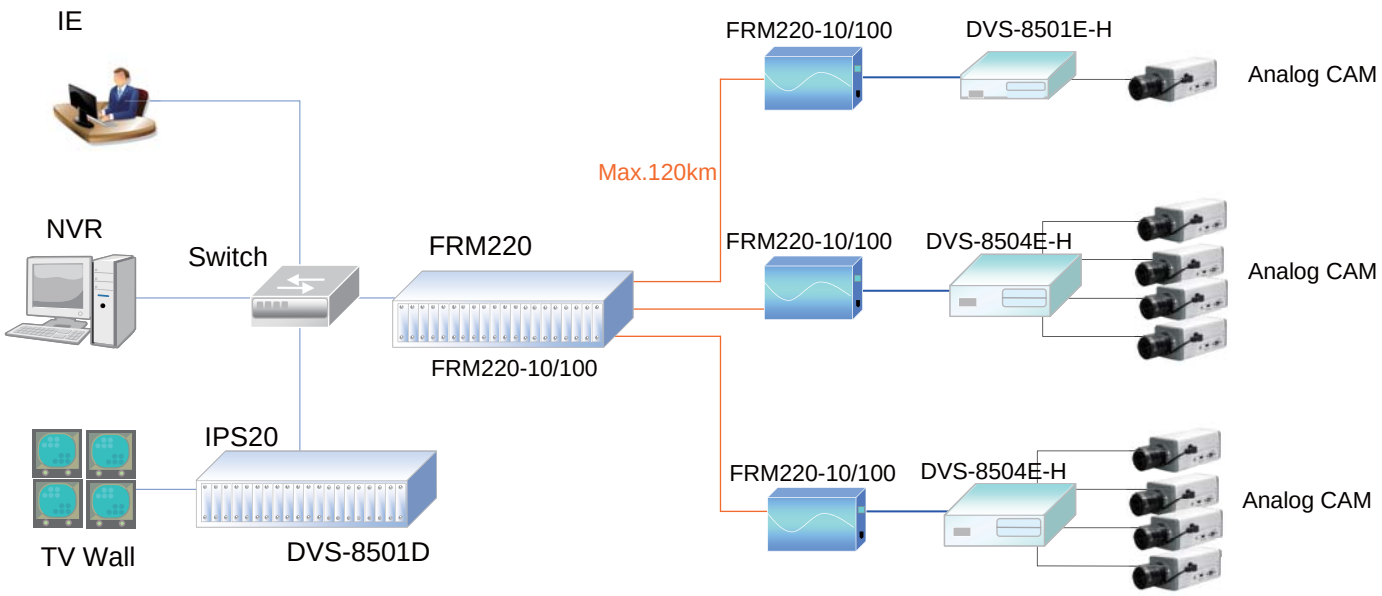

IP Surveillance with Ethernet over Coax Application

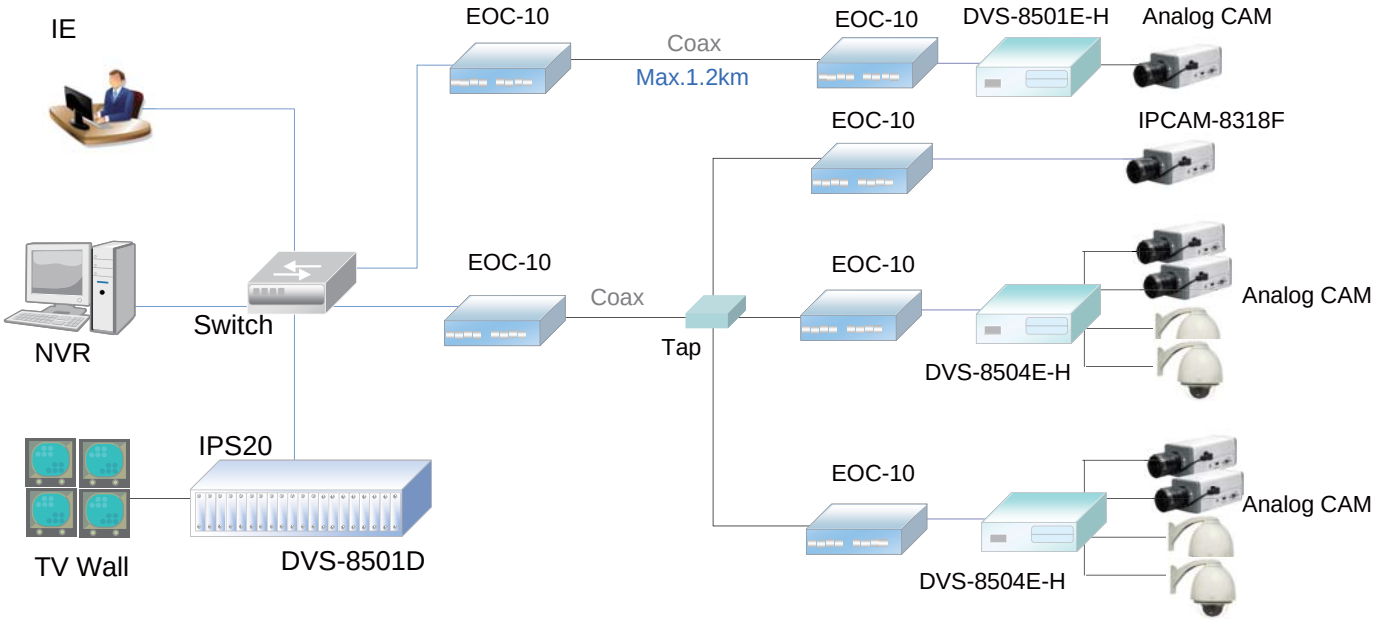

IP Surveillance with G.SHDSL.bis Application

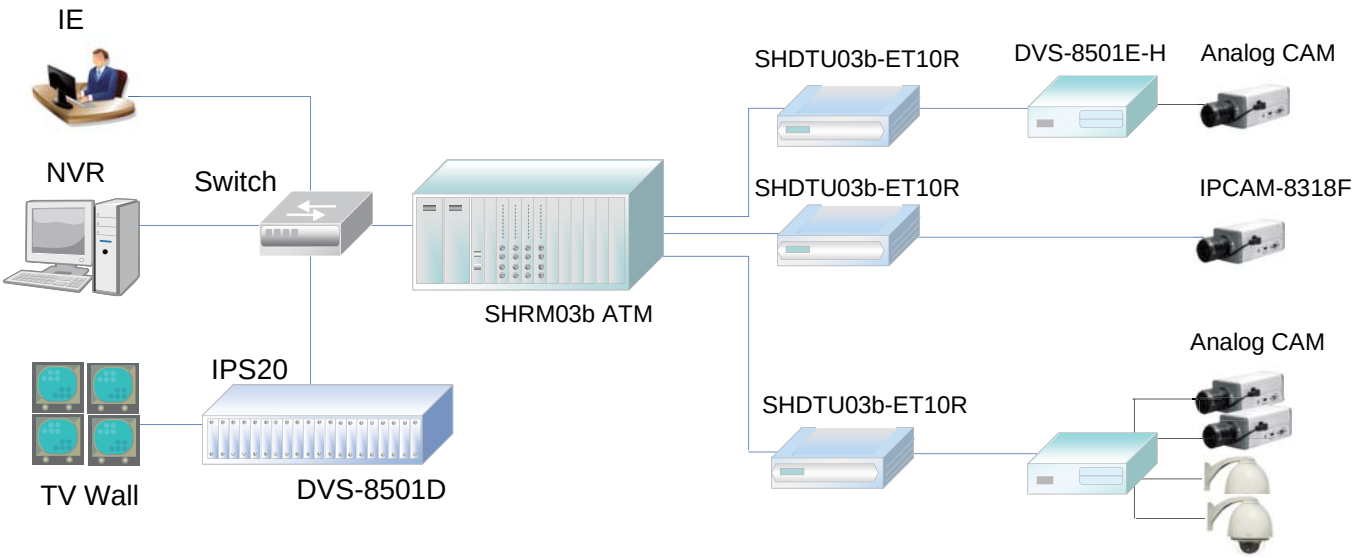

IP Surveillance Blade Card Chassis

Overview

CTC Union's IP surveillance solution is a highly efficient system based on a universal blade design. The high quality H.264 DVS (Digital Video Server) can provide full D1 resolution with 30/25 (NTSC/PAL) FPS.

DVS blades can fit in IPS series racks together with CTC Union's FRM fiber series blades to form a complete and multi-functional solution. The hot swappable blades also enable a quick replacement of internal drives for lower maintenance cost and less Mean Time To Repair.

The risk of video data loss resulting from transmission or central system error will never be a trouble again. CTC Union's DVS series provides unique and powerful local storage capability to minimize this kind of risk, thanks to CTC Union's modular blades design.

Now customers can build up an IP surveillance system according to the exact channels they want. By using the 1 channel single blades design, customers have the best flexibility and scalability ever!

In addition to DVS, CTC Union also provides various IP cameras for customers who intend to build up a pure IP surveillance system directly. As for the monitoring and recording tasks, CTC Union's high performance NVR (Network Video Recorder) can provide a convenience and easy-to-use platform for analyzing, distributing, and managing image data.

CTC Union is dedicated to providing our customers the most efficient way to build up a system and create value!

IPS 1-Slot Chassis

IPS01

The CTC Union IPS01 is a single slot rack for holding one CTC Union blades such as Digital Video Encoder and Fiber Media Converter. The built-in power module is designed for convenience and professional installation. The IPS01 gives flexibility, scalability, and functionality to make a high performance standalone.

Features

- 1-slot chassis for encoder, decoder line cards.
- Available in six types: external power adapter or power built-in AC, DC, AC+DC, AC+AC or DC+DC.
- Fanless
- Dimensions :
  - external power 139 x 88 x 24mm (D x W x H)
  - internal power 180 x 135 x 30mm (D x W x H)

Power Input

Power adapter

Input voltage	100 ~ 240VAC 50/60Hz
Output voltage	12VDC 1A
AC power	100 ~ 240VAC
DC power	24VDC, 48VDC, 72VDC

1 slot Multi-service Platform Technologies Supported

- DVS-8501E (1-slot, 1-ch H.264 digital video encoder)
- DVS-8501D blade Card (1-slot, 1-ch H.264 digital video decoder)
- Fiber Media Converter series products. (Refer to FRM220 series)

Ordering Information

IPS01- □□□□□□ Power type

DC 12 : DC adapter
AC: AC power
DC: DC power
AD: AC+DC power
AA: AC+AC power
DD: DC+DC power

Example: IPS01-AC

IPS 2-Slot Chassis
IPS02

The CTC Union IPS02 is a 2-slot rack for holding up to 2 interchangeable and hot-swappable CTC Union blades such as Digital Video Server and Fiber Media Converter. The IPS02 gives flexibility, scalability, and functionality to make a high performance standalone device.

Features
- 2-slot chassis for encoder, decoder line cards
- Supports either one or two single width blades or one double width blade.
- Power type: external power adapter
- Fanless
- Dimensions: 139 x 88 x 44.5mm (D x W x H)

2-slot Multi-service Platform Technologies Supported
- DVS-8501E (1-slot, 1-ch H.264 digital video encoder)
- DVS-8501E-H Blade Card (2-slot, 1-ch H.264 digital video encoder w/hard disk)
- DVS-8504E-FD Blade Card (2-slot, 4-ch H.264 digital video encoder)
- DVS-8501D Blade Card (1-slot, 1-ch H.264 digital video decoder)
- Fiber Media Converter series products. (Refer to FRM220 series)

Power Input
Power adapter

Input voltage	100 ~ 240VAC 50/60Hz
Output voltage	12VDC 2A

Ordering Information

IPS02- □□□□□ Power type

DC12-1: chassis for one DC jack with an external adapter (DVS-8501E-H, DVS-8504E-FD)
DC12-2: chassis for two DC jack with an external adapter (DVS-8501E, DVS-8501D)

Example: IPS02-DC12-1

IPS 4-Slot Chassis
IPS04

The CTC Union IPS04 is a 4-slot rack for holding up to 4 interchangeable and hot-swappable CTC Union blades such as Digital Video Server and Fiber Media Converter. The IPS04 gives flexibility, scalability, and functionality to help construct a multi-task system.

Features
- Four slots chassis for encoder, decoder line cards
- Supports backplane connection between four slots
- Supports one to four single width blades or two double width blades.
- Fanless
- Dimension : 162 x 87 x 88mm (D x W x H)

4 slots Multi-service Platform Technologies Supported
- DVS-8501E (1-slot, 1-ch H.264 digital video encoder)
- DVS-8501E-H Blade Card (2-slot, 1-ch H.264 digital video encoder w/hard disk)
- DVS-8504E-FD Blade Card (2-slot, 4-ch H.264 digital video encoder)
- DVS-8501D Blade Card (1-slot, 1-ch H.264 digital video decoder)
- Fiber Media Converter series products. (Refer to FRM220 series)

Power Input
Power adapter

Input voltage	100 ~ 240VAC 50/60Hz
Output voltage	12VDC 3A
AC power	100 ~ 240VAC
DC power	24VDC, 48VDC, 72VDC

Ordering Information

IPS04- □□□□□ Power type

DC12: chassis for one DC adapter

Example: IPS01-DC

1 Channel Blade Digital Video Encoder

DVS-8501E

CTC Union DVS-8501E Video Encoder Blade is a 1-ch video encoder provides H.264 & M-JPEG cutting edge video compression technologies. It can deliver multiple or individual configurable video streams simultaneously with full D1 resolution at 30/25 (NTSC/PAL) FPS and remote monitoring. This means that several video streams can be configured with different resolutions, frame rates and bit rate for different needs. The DVS-8501E can also provide dual-stream transmissions for recording and monitoring. The web management offers the convenience user access to detailed alarm detection and actions. When the DVS-8501E blades are used with CTC IPS series racks, this combination can effectively convert the analog security systems to high efficient performance IP based solution.

Features

- Multiple H.264 streams
- D1 resolution @ 30FPS,(NTSC) @ 25FPS (PAL)
- 1 video in, 1 audio in / out
- Built-in Web server for management
- Supports HTTPS and password protection
- Provides main and sub video streams with different resolution
- Supports logic (AND / OR) event alarms
- Supports two-way audio
- 1 Digital Input / 1 Digital Output connections
- Supports privacy mask
- Fan less design

DVS 8501E Rack Solution

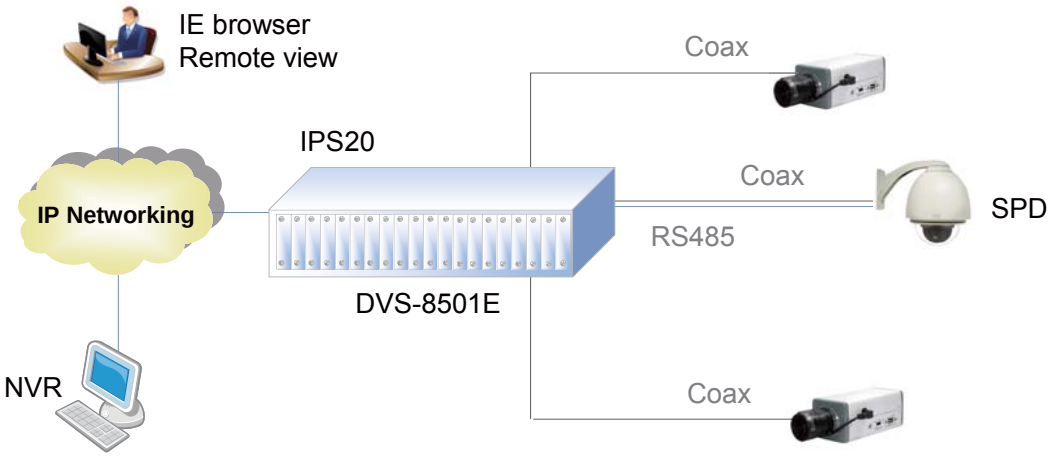

DVS 8501E Stand-alone Solution

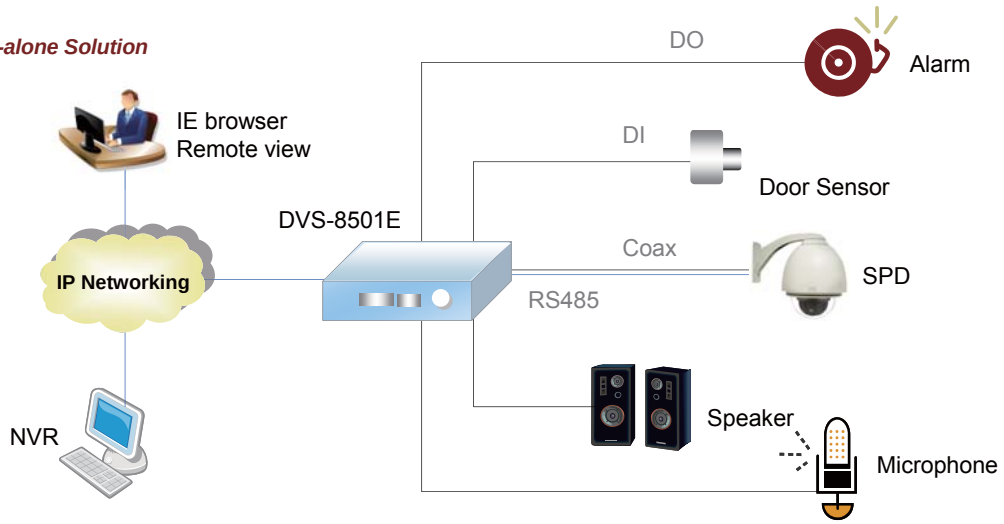

Ordering Information

DVS-8501E 1-ch H.264 digital video encoder

Specifications

Video Compression
H.264/M-JPEG

Video Stream
Main Stream, Sub stream (Main Stream to select D1 or 4CIF)
(Slave stream only to select CIF or QCIF)

Video Resolutions
D1: 720x480(NTSC)/720x576(PAL)
4CIF: 704x480(NTSC)/704x576(PAL)
2CIF: 704x240(NTSC)/704x288(PAL)
CIF: 352x240(NTSC)/352x288(PAL)
QCIF: 176x120(NTSC)/176x144(PAL)

Operating System
Embedded Linux

Video Frame Rate
1 ~ 30 FPS

Video Quality
5 levels (Medium, standard, good, detailed, excellent), Auto

Video Input
1, BNC, 75 ohm, 1 Vp-p

Network Connector
RJ-45, IEEE 802.3 10Base-T, 802.3u 100Base-TX

Network Protocols
TCP, UDP, IP, ICMP, PPPoE, ARP, UPnP, HTTP, HTTPS, FTP, SMTP, DHCP, DNS, DDNS, RTP, RTSP, SNMP

Audio Inputs
1 channel audio, Microphone in

Audio Output
1 channel audio, Line out

Audio Compression
ADPCM G.711

Audio Stream
Two-way (H.264 only)

Input / Output Signal
6V p-p, +10dBm max

Input / Output Impedance
600 ohms

Terminal Block
1xRS-485 (DB9 interface), 1 alarm input, 1 alarm output

PTZ Protocol
Pelco D, P

PTZ Baud Rate
2400, 4800, 9600, 12800, 19200 Kbps

PTZ Control Speed
Pan, Tilt, Zoom, Focus, Iris

PTZ Preset
32 Preset positions

PTZ Patrol
4 Tour mode (Each mode has 10 positions)

Remote Management
Web (CGI), SNMP v1/v2c

Dimension
Line card type: 88*137*20.8mm (W*D*H)

Operating condition
-10 to 60 degree (Celsius)

Storage condition
-20 to 85 degree (Celsius)

Operating Humidity
0 to 95% (non-condensing)

Power Input
12VDC, 1A

System Reset
Reset button (factory default)

LED Indications
Power, LAN, video status

Motion Detection
Drag and drop configurable detection windows

Configuration Backup /Recovery
Web browser

Firmware Upgrade
Web browser

NTP
Sync with PC, Sync with NTP server, Manual

Video Adjustment
Brightness, contract, saturation, color tone level

User Account
Up to 10 user accounts for configurable

Event Action
FTP, E-mail, DO1, SMS, SNMP, remote storage, PTZ preset

Event Sending Path
FTP; E-mail (forwarding JPEG picture)

Digital Zoom
4x

Snapshot
Live view mode (JPEG format)

Event Define
User define video frame rate and video resolution and video quality when alarm input and motion detection

Text Overlay
Configurable text color, background color, date/time, display position

Privacy Mask
Support 3 privacy mask window

System Language
English, Simplified Chinese, Traditional Chinese

Log
System log, operating log

NVR Support
CTC Union , NUUO

DIMENSION DIAGRAM

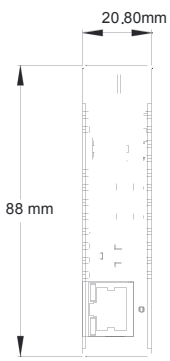

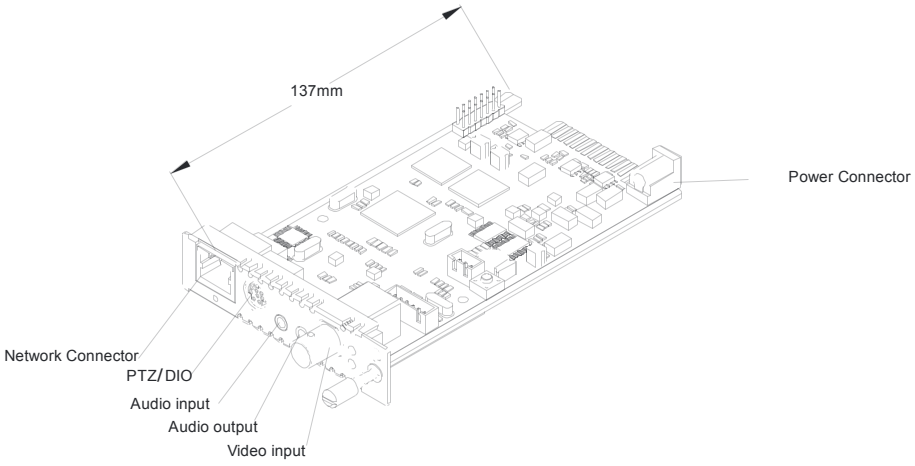

1 Channel Blade Digital Video Ecorder with Hard Drive

DVS-8501E-H

CTC Union DVS-8501E-H Video Encoder Blade is a 1-ch video encoder provides H.264 & M-JPEG high performance video compression technologies. It can deliver multiple or individual configurable video streams simultaneously with full D1 resolution at 30/25 (NTSC/PAL) FPS and remote monitoring. The DVS-8501E-H can also provide dual-stream transmissions for recording and monitoring. The built-in SATA interface enables powerful storage capability for the DVS-8501E-H to do the video streaming transmission and local storage at the same time. The web management offers the user convenience access to detailed alarm detection and actions. When DVS-8501E blades are used with CTC IPS series racks with various channels choices, this combination can effectively convert the analog security systems to high performance IP based solution.

Features

- Multiple H.264 streams
- D1 resolution @ 30FPS(NTSC), @ 25FPS (PAL)
- 1 video in / out, 1 audio in / out
- Built-in Web server for management
- Supports HTTPS and password protection
- Supports 2.5" SATA hard-disk tray for local storage
- Provides main and sub video streams with different resolution
- Supports logic (AND / OR) event alarms
- Supports two-way audio
- 1 Digital Input / 1 Digital Output connections
- Supports privacy mask
- Fan less design

DVS 8501E-H Rack Solution

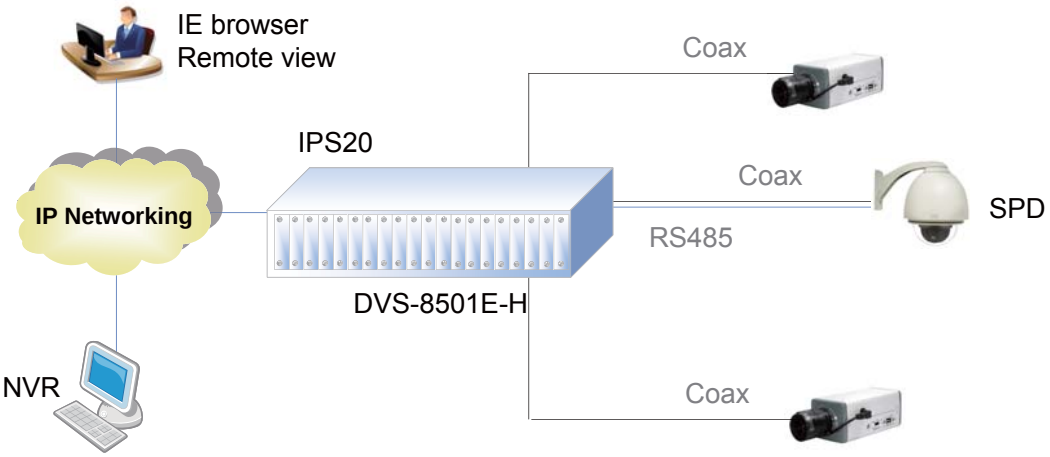

DVS 8501E-H Stand-alone Solution

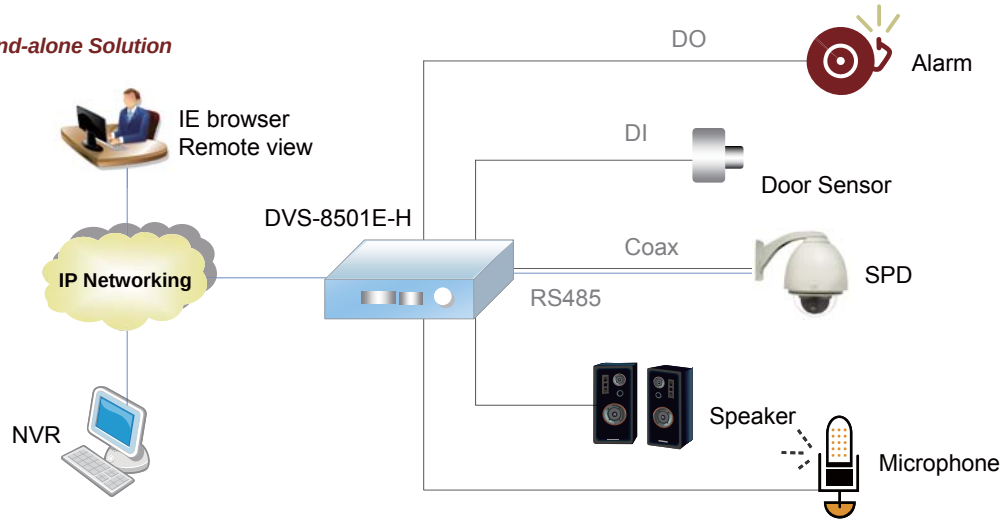

Ordering Information

DVS-8501E-H 1-ch H.264 digital video encoder w/ hard disk interface

Specifications

Video Compression
H.264/M-JPEG
Video Stream
Main Stream, Sub stream (Main Stream to select D1 or 4CIF)
(Slave stream only to select CIF or QCIF)
Video Resolutions
D1: 720x480(NTSC)/720x576(PAL)
4CIF: 704x480(NTSC)/704x576(PAL)
2CIF: 704x240(NTSC)/704x288(PAL)
CIF: 352x240(NTSC)/352x288(PAL)
QCIF: 176x120(NTSC)/176x144(PAL)
Operating System
Embedded Linux
Video Bit Rate
32K/64K/128K/256K/384K/512K/768K/1024K/1.5M/2M
Video Frame Rate
1 ~ 30 FPS
Video Quality
5 levels (Medium, standard, good, detailed, excellent), Auto
Video Input
1, BNC, 75 ohm, 1 Vp-p
Video Output
1, BNC, 75 ohm, 1 Vp-p
Network Connector
RJ-45, IEEE 802.3 10Base-T, 802.3u 100Base-TX
Network Protocols
TCP, UDP, IP, ICMP, PPPoE, ARP, UPnP, HTTP, HTTPS, FTP, SMTP, DHCP, DNS, DDNS, RTP, RTSP, SNMP
Audio Inputs
1 channel audio, Microphone in
Audio Output
1 channel audio, Line out
Audio Compression
ADPCM G.711
Audio Stream
Two-way (H.264 only)
Input / Output Signal
6V p-p, +10dBm max
Input / Output Impedance
600 ohms
Terminal Block
1xRS-485 (DB9 interface), 1 alarm input, 1 alarm output
PTZ Protocol
Pelco D, P
PTZ Baud Rate
2400, 4800, 9600, 12800, 19200 Kbps
PTZ Control Speed
Pan, Tilt, Zoom, Focus, Iris
PTZ Preset
32 Preset positions
PTZ Patrol
4 Tour mode (Each mode has 10 positions)

Remote Management
Web (CGI), SNMP v1/v2c
Dimension
Line card type: 88*139*42.1mm (W*D*H)
Operating condition
-10 to 60 degree (Celsius)
Storage condition
-20 to 85 degree (Celsius)
Operating Humidity
0 to 95% (non-condensing)
Power Input
12VDC, 2A
System Reset
Reset button (factory default)
LED Indications
Power, LAN, video status
Motion Detection
Drag and drop configurable detection windows
Configuration Backup /Recovery
Web browser
Local Storage
2.5" SATA HDD *1 (Hard drive is not include)
Firmware Upgrade
Web browser
NTP
Sync with PC, Sync with NTP server, Manual
Video Adjustment
Brightness, contract, saturation, color tone level
User Account
Up to 10 user accounts for configurable
Event Action
FTP, E-mail, DO1, SMS, SNMP, remote storage, PTZ preset
Event Sending Path
FTP; E-mail (forwarding JPEG picture)
Digital Zoom
4x
Snapshot
Live view mode (JPEG format)
Playback
Playback via IE browser
Event Define
User define video frame rate and video resolution and video quality when alarm input and motion detection
Text Overlay
Configurable text color, background color, date/time, display position
Privacy Mask
Support 3 privacy mask window
System Language
English, Simplified Chinese, Traditional Chinese
Log
System log, operating log
NVR Support
CTC Union , NUUO

DIMENSION DIAGRAM

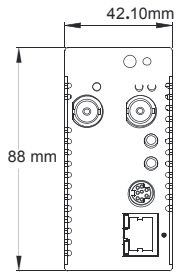

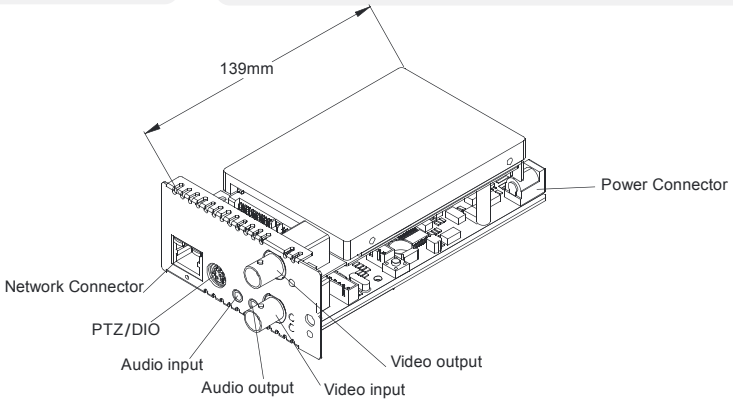

4 Channels Digital Video Econder with Hard Drive

DVS-8504E-H

CTC Union DVS-8504E is a standalone H.264 video encoder. It can connect up to 4 analog video cameras and transfer these streams from analog format to digital format simultaneously through H.264 video compression technology. The DVS-8504E provides high resolution and various video layouts from 1CH/ D1 to 4CH/ CIF and can also delivers multiple or individual configurable video streams at the same time. The DVS-8504E-H can be also provides dual-stream transmissions for recording and monitoring. The built-in SATA interface enables powerful storage capability for the DVS-8504E to do the video streaming transmission and local storage at the same time. The web management offers the user convenience access to detailed alarm detection and actions. CTC Union DVS-8504E provides an easy way to migrate the analog system to high performance IP based solution.

Features

- Multiple H.264 streams
- D1 resolution @ 30FPS, CIF resolution@120FPS
- 1-CH D1 / 2-CH 2CIF / 4-CH CIF
- Built-in Web server for management
- Supports HTTPS and password protection
- Supports 3.5" SATA hard-disk tray for local storage
- Provides main and sub video streams with different resolution
- Supports logic (AND / OR) event alarms
- Supports two-way audio
- 4 Digital Input / 2 Digital Output connections
- Supports privacy mask
- Fan less design

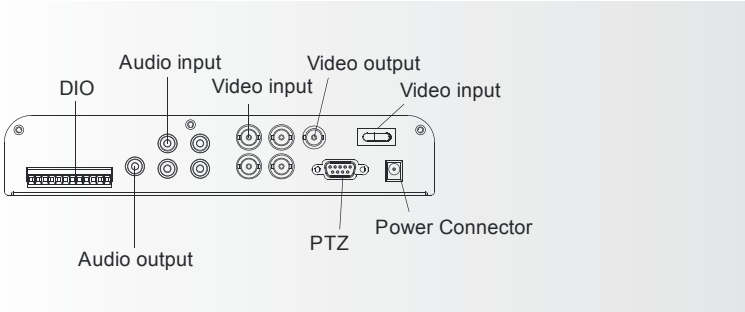

DVS 8504E-H CIF resolution application

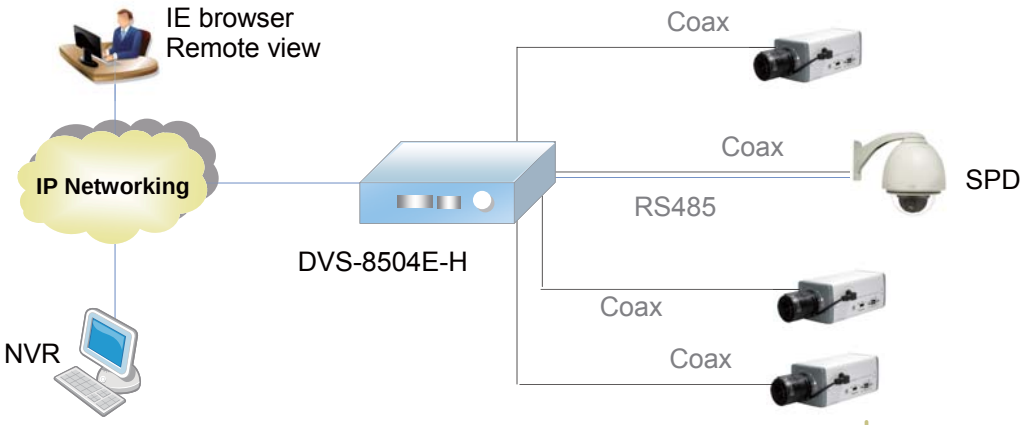

DVS 8504E-H D1 resolution application

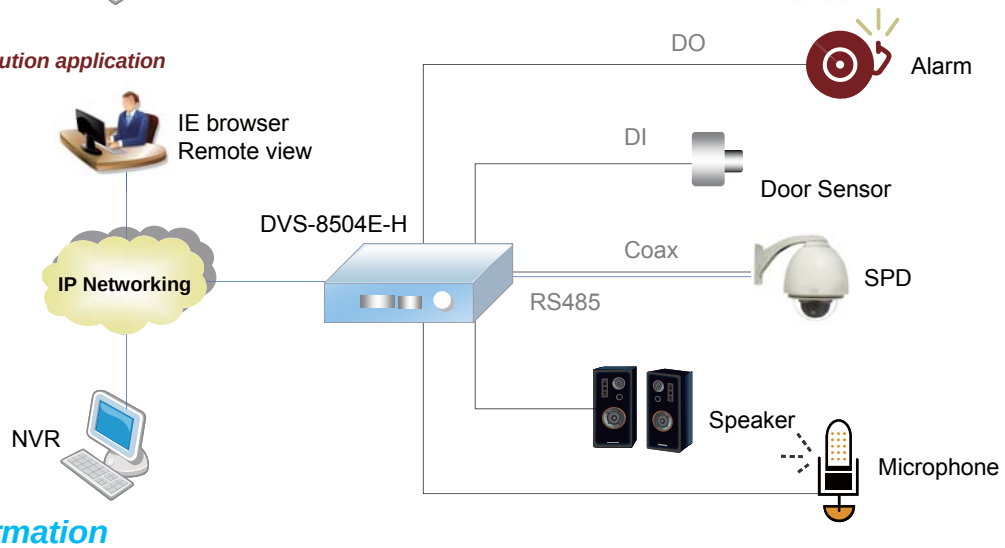

Ordering Information

DVS-8504E-H 4-ch H.264 digital video encoder w/ hard disk

Specifications

Video Compression
H.264/M-JPEG

Video Stream
Main Stream, Sub stream (Main Stream to select D1 or 4CIF)
(Slave stream only to select CIF or QCIF)

Video Resolutions
D1: 720x480(NTSC)/720x576(PAL)
4CIF: 704x480(NTSC)/704x576(PAL)
2CIF: 704x240(NTSC)/704x288(PAL)
CIF: 352x240(NTSC)/352x288(PAL)
QCIF: 176x120(NTSC)/176x144(PAL)

Operating System
Embedded Linux

Video Bit Rate
32K/64K/128K/256K/384K/512K/768K/1024K/1.5M/2M

Video Frame Rate
1 ~ 30 FPS

Video Quality
5 levels (Medium, standard, good, detailed, excellent), Auto

Video Input
4, BNC, 75 ohm, 1 Vp-p

Video Output
1, BNC, 75 ohm, 1 Vp-p
(D1/4CIF supported full screen, 2CIF/CIF supported quad mode)

Network Connector
RJ-45, IEEE 802.3 10Base-T, 802.3u 100Base-TX

Network Protocols
TCP, UDP, IP, ICMP, PPPoE, ARP, UPnP, HTTP, HTTPS, FTP, SMTP, DHCP, DNS, DDNS, RTP, RTSP, SNMP

Audio Inputs
4 channels mono audio (RCA)

Audio Output
1 channel mono audio (RCA)

Audio Compression
ADPCM G.711

Audio Stream
Two-way (H.264 only)

Input / Output Signal
6V p-p, +10dBm max

Input / Output Impedance
600 ohms

Terminal Block
1xRS-485 (DB9 interface), 4 alarm input, 2 alarm output

PTZ Protocol
Pelco D, P

PTZ Baud Rate
2400, 4800, 9600, 12800, 19200 Kbps

PTZ Control Speed
Pan, Tilt, Zoom, Focus, Iris

PTZ Preset
32 Preset positions

PTZ Patrol
4 Tour mode (Each mode has 10 positions)

Remote Management
Web (CGI), SNMP v1/v2c

Dimension
Line card type: 238*257.4*44mm (W*D*H)

Operating condition
-10 to 60 degree (Celsius)

Storage condition
-20 to 85 degree (Celsius)

Operating Humidity
0 to 95% (non-condensing)

Power Input
12VDC, 2A

System Reset
Reset button (factory default)

LED Indications
Power, LAN, video status

Motion Detection
Drag and drop configurable detection windows

Configuration Backup /Recovery
Web browser

Local Storage
3.5" SATA HDD *1 (Hard drive is not include)

Firmware Upgrade
Web browser

NTP
Sync with PC, Sync with NTP server, Manual

Video Adjustment
Brightness, contract, saturation, color tone level

User Account
Up to 10 user accounts for configurable

Event Action
FTP, E-mail, DO1, DO2, SMS, SNMP, local storage, remote storage, PTZ preset

Event Sending Path
FTP; E-mail (forwarding JPEG picture)

Digital Zoom
4x

Snapshot
Live view mode (JPEG format)

Playback
Playback via IE browser

Event Define
User define video frame rate and video resolution and video quality when alarm input and motion detection

Text Overlay
Configurable text color, background color, date/time, display position

Privacy Mask
Support 1 privacy mask window

System Language
English, Simplified Chinese, Traditional Chinese

Log
System log, operating log

NVR Support
CTC Union , NUUO

DIMENSION DIAGRAM

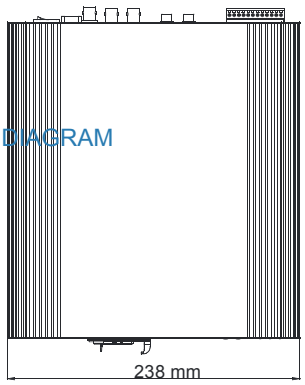

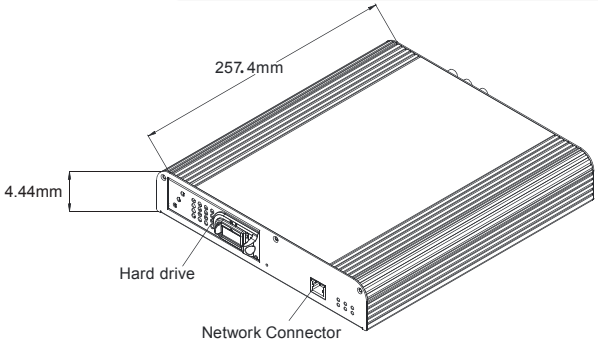

4 Channel Blade Digital Video Encoder

DVS-8504E-FD

The DVS-8504E-FD offers highly-effective H.264 video compression. It can deliver multiple or individual configurable video streams simultaneously at full 30FPS all resolutions up to D1 (720x480 in NTSC, 720x576 in PAL). This means that several video streams can be configured with different resolutions, frame rates and bit rate for different needs.

The DVS-8504E-FD can also provide dual-stream transmissions for recording and monitoring. The DVS can also provide video for viewing at two different locations or have the main stream be recorded and have the sub-stream available for live viewing. The web management offers the user access to detailed alarm detection and actions.

Features

- Multiple H.264 streams
- D1 resolution @ 30FPS(NTSC), @ 25FPS (PAL)
- 4 video input, 4 audio input
- Built-in Web server for management
- Supports HTTPS and password protection
- Provides main and sub video streams with different resolution
- Supports logic (AND / OR) event alarms
- Supports two-way audio
- 8 Digital Input / Output connections
- Supports privacy mask
- Fan less design

DVS 8504E-FD Rack Solution

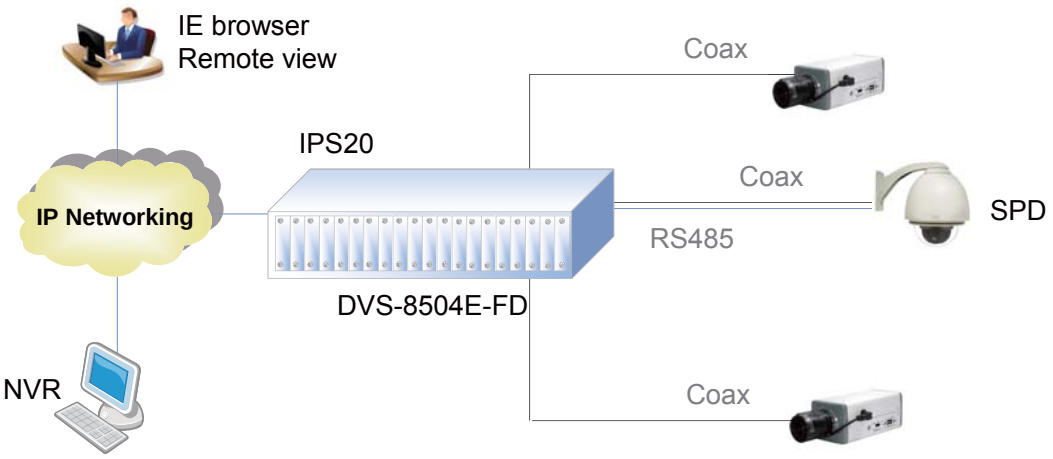

DVS 8504E-FD Stand-alone Solution

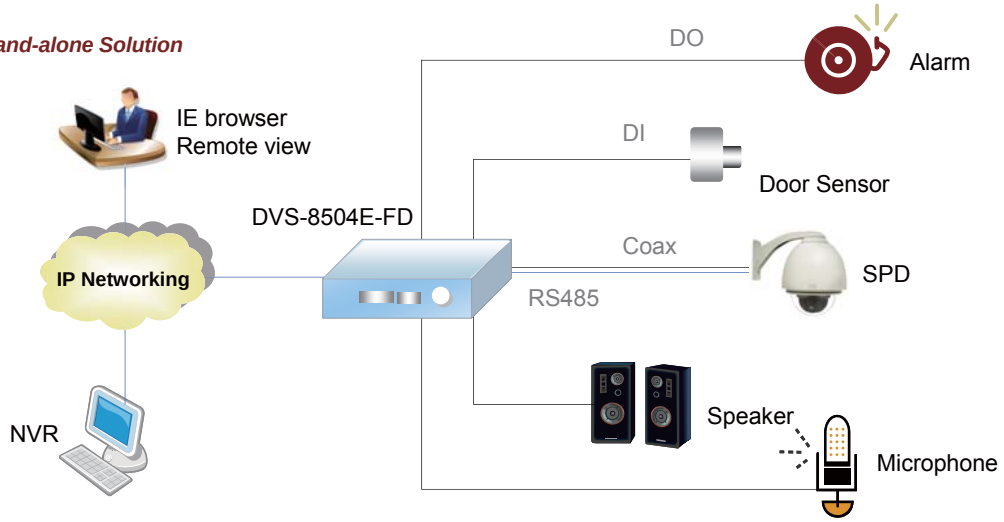

Ordering Information

DVS-8504E-FD 1-ch H.264 digital video encoder

Specifications

Video Compression
H.264/M-JPEG

Video Stream
Main Stream, Sub stream (Main Stream to select D1 or 4CIF)
(Slave stream only to select CIF or QCIF)

Video Resolutions
D1: 720x480(NTSC)/720x576(PAL)
4CIF: 704x480(NTSC)/704x576(PAL)
2CIF: 704x240(NTSC)/704x288(PAL)
CIF: 352x240(NTSC)/352x288(PAL)
QCIF: 176x120(NTSC)/176x144(PAL)

Operating System
Embedded Linux

Video Bit Rate
32K/64K/128K/256K/384K/512K/768K/1024K/1.5M/2M

Video Frame Rate
1 ~ 30 FPS

Video Quality
5 levels (Medium, standard, good, detailed, excellent), Auto

Video Input
4, BNC, 75 ohm, 1 Vp-p

Video Output
1, BNC, 75 ohm, 1 Vp-p

Network Connector
RJ-45, IEEE 802.3 10Base-T, 802.3u 100Base-TX

Network Protocols
TCP, UDP, IP, ICMP, PPPoE, ARP, UPnP, HTTP, HTTPS, FTP, SMTP, DHCP, DNS, DDNS, RTP, RTSP, SNMP

Audio Inputs
4 channel audio, Microphone in

Audio Output
1 channel audio, Line out

Audio Compression
ADPCM G.711

Audio Stream
Two-way (H.264 only)

Input / Output Signal
6V p-p, +10dBm max

Input / Output Impedance
600 ohms

Terminal Block
1xRS-485 (DB9 interface), 8 alarm input/output

PTZ Protocol
Pelco D, P

PTZ Baud Rate
2400, 4800, 9600, 12800, 19200 Kbps

PTZ Control Speed
Pan, Tilt, Zoom, Focus, Iris

PTZ Preset
32 Preset positions

PTZ Patrol
4 Tour mode (Each mode has 10 positions)

Remote Management
Web (CGI), SNMP v1/v2c

Dimension
Line card type: 88*139*42.1mm (W*D*H)

Operating condition
-10 to 60 degree (Celsius)

Storage condition
-20 to 85 degree (Celsius)

Operating Humidity
0 to 95% (non-condensing)

Power Input
12VDC, 2A

System Reset
Reset button (factory default)

LED Indications
Power, LAN, video status

Motion Detection
Drag and drop configurable detection windows

Configuration Backup /Recovery
Web browser

Firmware Upgrade
Web browser

NTP
Sync with PC, Sync with NTP server, Manual

Video Adjustment
Brightness, contract, saturation, color tone level

User Account
Up to 10 user accounts for configurable

Event Action
FTP, E-mail, DO1~8, SMS, SNMP, PTZ preset

Event Sending Path
FTP; E-mail (forwarding JPEG picture)

Digital Zoom
4x

Snapshot
Live view mode (JPEG format)

Event Define
User define video frame rate and video resolution and video quality when alarm input and motion detection

Text Overlay
Configurable text color, background color, date/time, display position

Privacy Mask
Support 3 privacy mask window

System Language
English, Simplified Chinese, Traditional Chinese

Log
System log, operating log

NVR Support
CTC Union , NUUO

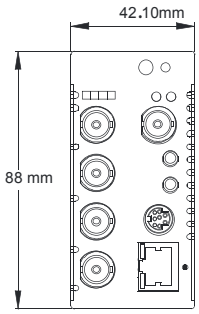

DIMENSION DIAGRAM

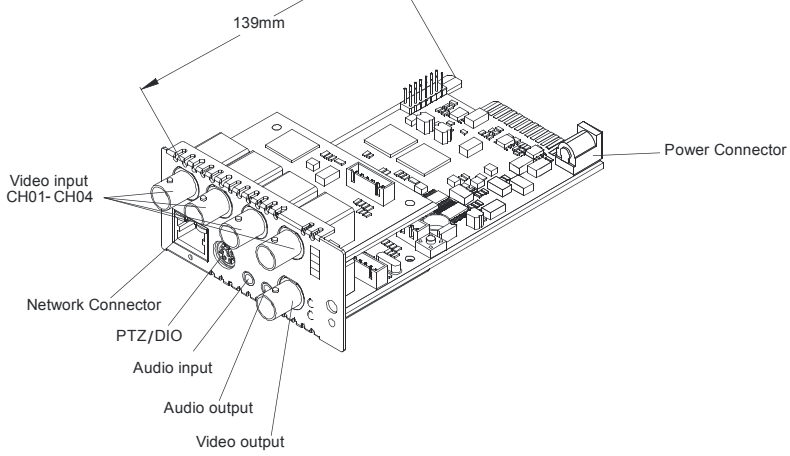

1 Channel Blade Digital Video Decoder

DVS-8501D

CTC Union DVS-8501D is a 1-ch video decoder with cutting edge H.264 video compression technology compatible with the CTC Union H.264 video encoders. It enables convert the digitalized video data back to analog format for various back-side devices such as TV wall, legacy DVR, and Joysticks. The DVS-8501D can decode video source up to 64 channels. When DVS-8501D blades are used with CTC IPS series racks with various channels choices, the DVS-8501D can become standalone type with VGA port for LCD monitor video output or rack type for professional installation in the control room.

Features

- Complies with H.264 compression technology
- Provides high quality analog video and audio decoding
- Programmable sequence mode for multiple video sources
- Decodes video source up to 64 channels (Sequence display mode)
- Built-in Web server for easy management
- Supports secure management and encrypted video streams
- VGA port for stand-alone type
- Supports two-way audio
- Card fits in one-slot or 20-slot chassis

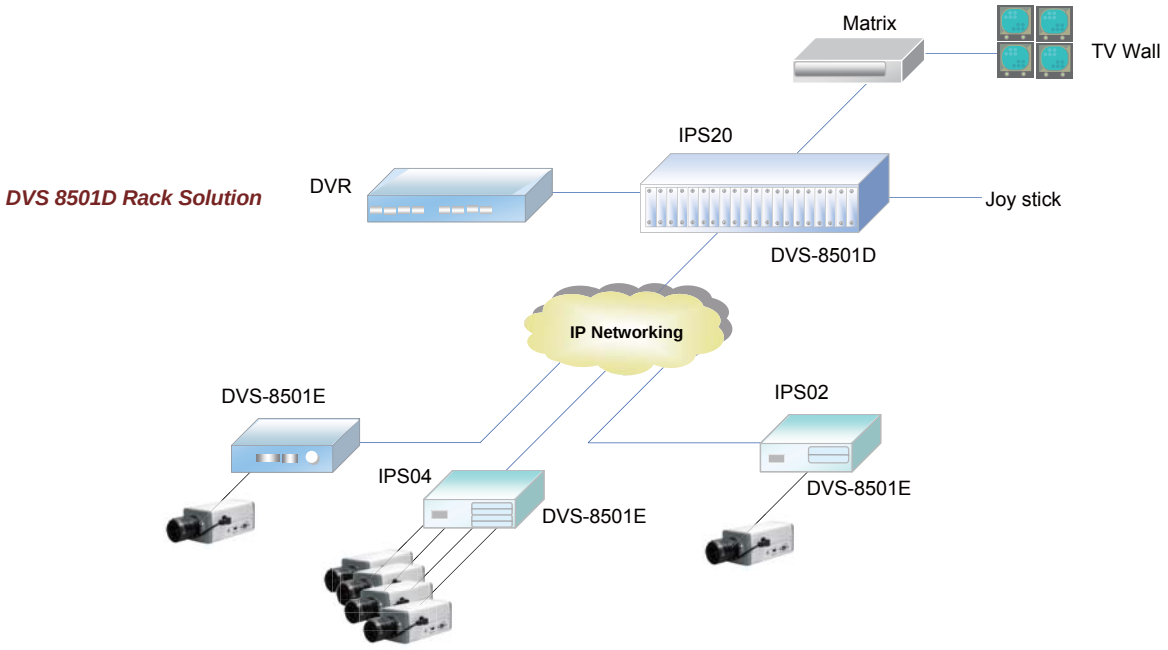

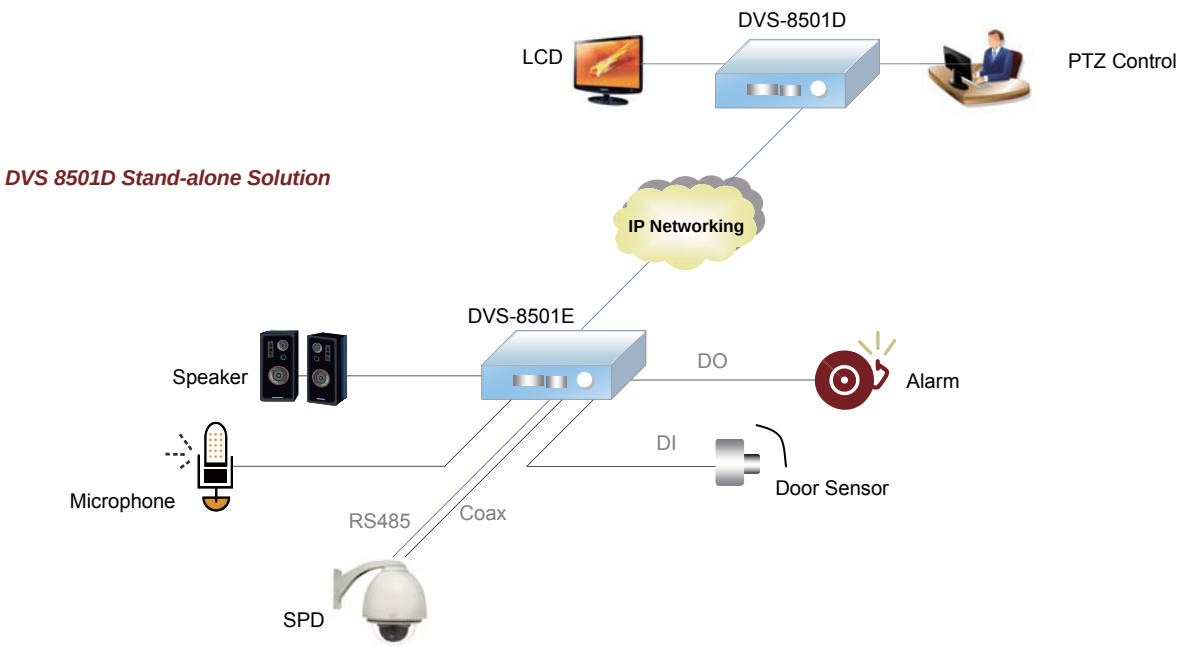

Specifications

Video Decoding
H.264 video with resolution up to D1
64 different video sources
(support manual cycling、automatic cycling)

Video Resolutions
D1 720x480(NTSC)/720x576(PAL)
4CIF: 704x480(NTSC)/704x576(PAL)
2CIF 704x240(NTSC)/704x288(PAL)
CIF 352x240(NTSC)/352x288(PAL)
QCIF 176x120(NTSC)/176x144(PAL)

Operating System
Embedded Linux

Frame rate
Frame rates up to 30 (NTSC) / 25 (PAL) in all resolution

Decoding Source
CTCU DVS-8504E-H / DVS-8501E / DVS-8501E-H / DVS-8504E-FD

Video Output
1, BNC, 75 ohm, 1 Vp-p

Video Output
1, BNC, 75 ohm, 1 Vp-p (for DVS-8501D)
1 BNC & 1 VGA (for DVS-8501DV series product)

Output Channel
1 channel mono audio, 3.5mm phone jack

Audio Compression
ADPCM G.711

Microphone
Omni-directional

Alarm and PTZ Interface
RS-485 (DB9 Interface), 1x alarm input, 1x alarm output

Remote Management
Web (CGI), SNMP v1/v2c

Network Connector
RJ-45, IEEE 802.3 10Base-T, 802.3u 100Base-TX

Network Protocols
TCP, UDP, IP, ICMP, PPPoE, ARP, UPnP, HTTP, HTTPS, FTP, SMTP, DHCP, DNS, DDNS, RTP, RTSP, SNMP

System Configuration
Backup and recovery all setting via web browser operation

Firmware Upgrade
Web browser

User Interface Language
English, Simplified Chinese, Traditional Chinese

Log
System log, operating log

Operating condition
-10 to 60 degree (Celsius)

Storage condition
-20 to 85 degree (Celsius)

Operating Humidity
Humidity 0 to 95% (non-condensing)

Power Input
12VDC, 1A

System Reset
Reset button (factory default)

LED Indications
Power, LAN, video status

Dimension
Line card type: 88*137*20.8mm (W*D*H)

Net Weight
Line card type: 100g

DIMENSION DIAGRAM

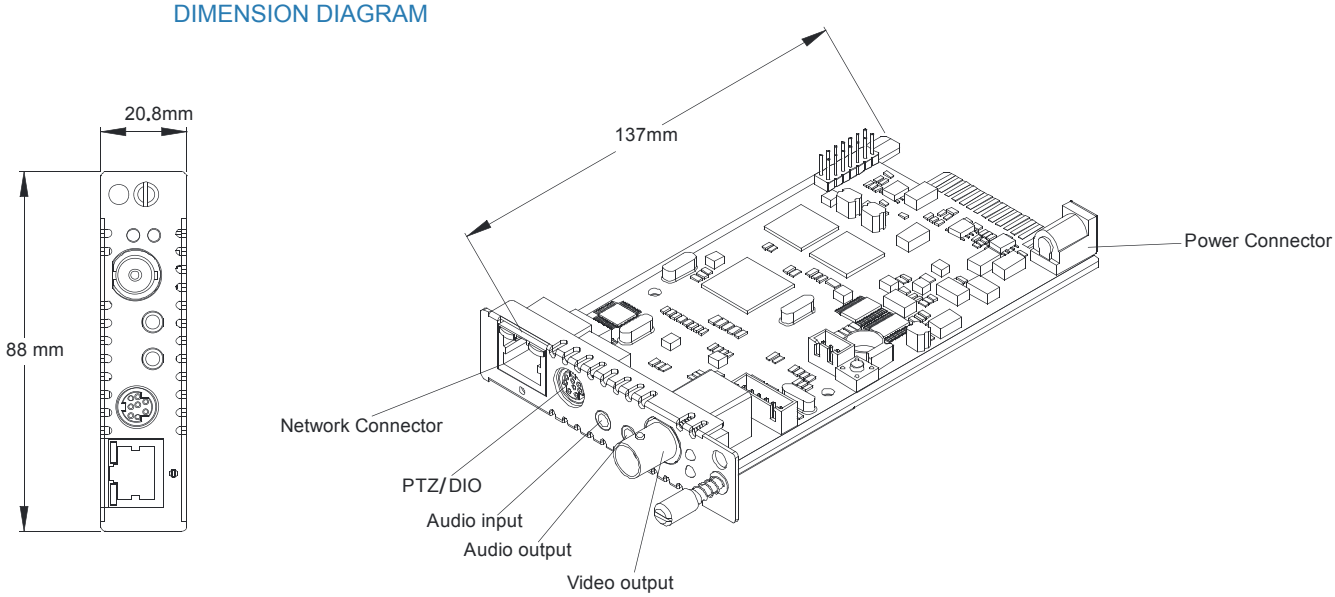

Ordering Information

DVS-8501D 1-ch H.264 digital video decoder

DVS-8501DV 1-ch H.264 digital video decoder w/ VGA connector

1 Channel Digital Video Encorder

DVS-8301

The DVS-8301 converts a single analog video stream to digital format. It delivers dual stream (MPEG-4 and MJPEG) @30 fps, 4CIF resolution for remote monitoring anywhere.

In addition, the DVS-8301 supports 3GPP mobile protocol, which enables users to monitor via 3G cell phones or any RTSP (Real Time Streaming Protocol) compatible multimedia software on the go.

A complete set of security features includes user access management and HTTPS encryption. DVS-8301 provides one audio stream for two-way audio applications, is a PoE (Power over Ethernet) enabled unit and has powerful event management that includes image upload to FTP server, alarm notification and I/O control. Pan/Tilt/Zoom control is done over RS-485.

Features

- Simultaneous Motion-JPEG & MPEG-4 streams, up to 4CIF resolution
- Excellent image quality with up to 30 fps in all resolutions
- PoE (Power over Ethernet) enabled device
- Supports two-way audio
- Digital I/O for external alarm or sensor
- Supports 3GPP/ISMA RTSP
- Supports multiple PTZ control protocols through RS-485
- UPnP for fast and easy installation
- Bundled 16 channel surveillance software

DVS 8301E Rack Solution

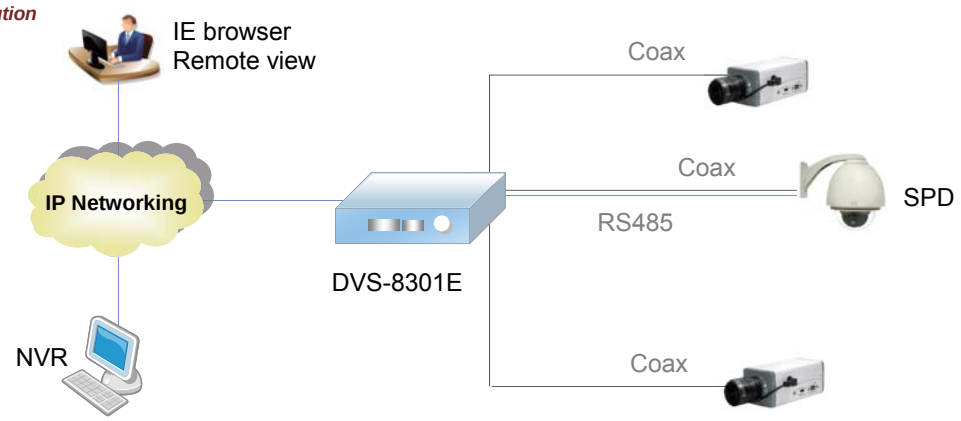

DVS 8301E Stand-alone Solution

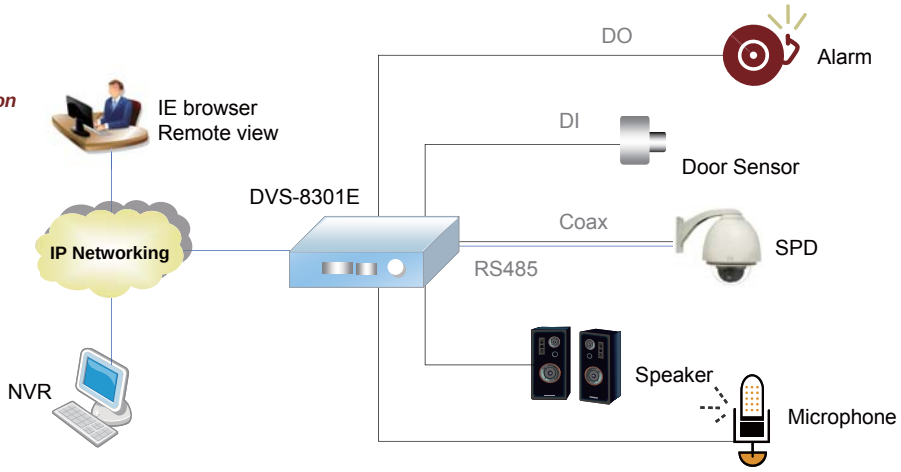

Ordering Information

DVS-8301 1-ch MPEG4 digital video encoder

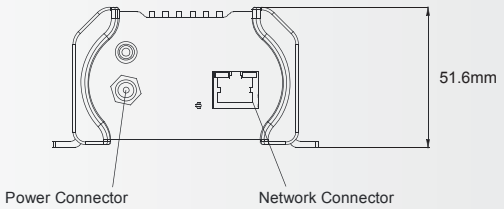

Specifications

Video Input
BNC, looping, 75ohms, 1Vp-p

Video Compression
MPEG4 Simple Profile, Motion JPEG

Bit Rate
64K ~2Mbps

Video Adjustment
Brightness, Contrast, Hue, Saturation, Constant Bit Rate (CBR), Variable Bit Rate (VBR)

PTZ Interface
RS-485

PTZ protocols
Pelco D/P

PTZ application
32 preset position, 4 patrol function

Processor and memory
32 Bits RISC Processor, 8MB Flash, 64MB SDRAM, Embedded Linux

LED Indications
Network, Power

Ethernet
RJ-45 10BaseT/100BaseTX PoE

Terminal Block Connector
RS-485/1 alarm input/ 1 relay output

Audio streaming
Two-way

Audio Input
3.5 mm mic/line in

Audio Output
3.5 mm line out jack

Audio compression
ADPCM 64Kbps

Alarm Trigger
External input, Motion detection

Alarm Events
Pre and post alarm buffer
File upload via FTP
Notification via email
External output activation

Network Protocol
TCP/IP, DHCP, PPPoE, ARP, ICMP, FTP, SMTP, DNS, NTP, IGMP, UPnP, RTSP, RTP, HTTP, TCP, UDP, 3GPP/ISMA RTSP

Application Program
CTCU IP installer (Win32 Application)
16 channel recording software (SVP-Express)

Security
Password protection, HTTPS encryption, user access log

Operating Condition
0 to 50%

Storage Condition
0 to 70%

Operating Humidity
20~80% RH (non-condensing)

Power
12VDC, 1A

Dimension
119x98x51.6 mm (D*W*H)

Approvals
CE, FCC, RoHS

Include Accessories
CD with installation and management software, Power supply

NVR Support
CTC Union

DIMENSION DIAGRAM

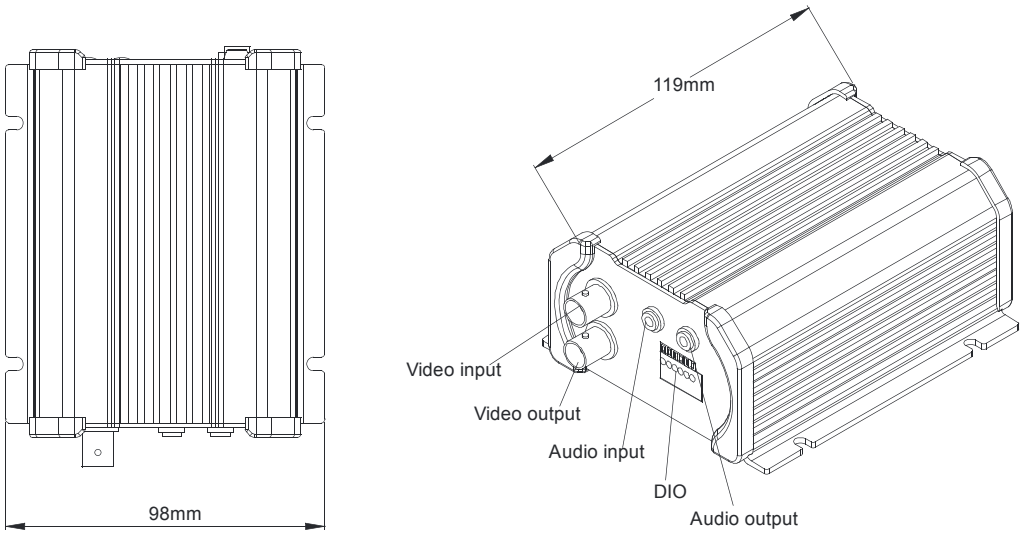

Network Video Recording Software

NVR

The CTC Union Network Video Recorder is a complete recording solution for CTC Union network cameras which is easy to use and install. It also supports multi brand and megapixel network camera from other manufacturers such as AXIS, ACTi, SONY, Bosch, Arecont Vision, VIVOTEK, etc. The NVR always give you the same image quality as the original image from the camera or video server because it stores directly in digital format. NVR is also able to receive and record audio streams. The NVR provides Web browser viewing of video so no other viewing software needs to be installed on the remote viewing station.

Features

- Supports multiple sites surveillance
- Manage all cameras with tree-directory display
- Supports 2x2, 3x3, 4x4, 5x5, 1+3, 1+4, 1+5, 1+7, 1+9, 1+11, 1+12, 1+15 window layout
- Supports management up to 25 cameras via unlimited tab
- Supports Megapixel / H.264 / MPEG-4 / MJPEG video stream format
- Multiple-channel preview in full-screen mode
- Digital zoom on preview and playback
- Continuous, Schedule, Motion, Alarm Recording
- Supports motion detection and Digital I/O event from hardware
- Maximum 120 seconds pre-event recording
- Search video clips by date, time
- Time-based search bar
- 25-channel synchronized playback
- Supports eMap Management and editable map with arbitrarily set the camera icon on the point of view
  Supports remote IE browser connection to NVR (without installation of NVR software)
- A large number date writing of disk optimization
- Automatic error detection which reduces crash or cease to function
- Implementation of real-time screen picture browsing and playback of video information available at the multi-channel monitor
- Supports multi-core processors
- Exported video files can provide a single channel to a single file, a single channel to multiple files, multi-channel to a single file, multi-channel to multiple files
- Storage space spreadsheet tool
- Supports maximum 512X playback speed
- Support language: English, German, Traditional Chinese, Simplified Chinese

Specifications

System Requirements

PC Specification	16 Channel:	Intel Core 2 Duo 2.4 GHz, 1 GB Memory, 250 GB HDD, Gigabit Ethernet, nVidia GeForce 7600 256 MB RAM
	32 Channel:	Intel Core 2 Duo 2.67 GHz, 2 GB Memory, 250 GB HDD, Gigabit Ethernet, nVidia GeForce 7600 256MB RAM
	48 Channel:	Intel Core 2 Quad 2.67 GHz, 4 GB Memory, 250 GB HDD, Gigabit Ethernet, nVidia GeForce 7600 256MB RAM
	64 Channel:	Intel Core 2 Quad 2.67 GHz, 4 GB Memory, 250 GB HDD, Gigabit Ethernet, nVidia GeForce 7600 256MB RAM
Graphic Card		ATI Radeon 1950, nVidia GeForce 8600GT
Operating System		Windows XP Professional, Windows 2003, Windows Vista (Business and Enterprise Edition)
Browser		Microsoft Internet Explorer v6.0, v7.0 with updated Service Pack

Preview

Format	H.264/MPEG-4/MJPEG
Resolution	Megapixel / D1 / 4CIF / 2CIF / CIF / QCIF
Window Layout	2x2, 3x3, 4x4, 5x5, 1+3, 1+4, 1+5, 1+7, 1+9, 1+11, 1+12, 1+15
Tree Display Panel	User may drag-n-drop to drag a video source to the layout manager for preview
Web Client	Remote preview via Internet Explorer
1-Way Audio	Supports 1-way audio.
Create Snapshots	Creates snapshot images and can be searched as an event index later on
Advanced Preview Mode	Maximum 25-channel preview at the same time with auto-drop frame mode according to CPU loading
Layout Manager	Setup pre-defined window layout to group certain cameras in the same layout. Layout manager can be displayed in full-screen mode.
Digital Zoom	User may zoom in/out the video display with mouse scroll wheel

Recording

Schedule Recording	Records video with user-defined schedule and time period
Alarm Recording	Records video when a digital input event is triggered
Motion Recording	Records video when motion detected
Pre-event Recording	User-defined time period to record before a certain event occurs. Maximum 120 seconds.

Event Handling

Event Types	Handles motion detection, alarm, video loss, network disconnection events
Hot-Spot Window	Activates and switches the channel with event to the hot-spot window. The original video in the hot-spot window will then be switched over
Event Log	Triggered event will be recorded into an event log
Play Audio File	Play audio file and beep on the machine
eMap	
eMap Manager	eMap configuration and management
eMap Monitor	Creates alarm when an event occurs on a certain camera in eMap

NVR Web Client Function

Remote Preview	Preview via Web browser
Remote Playback	Search and playback via Web browser
Remote Map	Manage map via Web browser

Permission Control

Auto Login	Auto login and load the first preview layout
Multi-level Permission	User may add 10 level permission to set group according to required function
Security	Account/password defined with associated permission control
Camera Group Permission	Setup Camera Group permission for different users.
eMap Permission	Setup eMap permission for different users.

Storage Manager

Recycle Recording	The oldest video clip will be overwritten when the disk reaches its minimum space requirement
Total Space Management	When total space reaches its minimum free space requirement, certain space will be cleaned up. The oldest files will be removed first.

Playback

Playback Mode	Play, Pause, Stop, Fast Forward, Fast Rewind, Play Backward, Play frame by frame, 1/2/4/8/16/32/64/128/256/512x Speed Control
Play Multiple Files	Plays multiple files in sequence for a period of time.
Export Video	Exports a period of video clips into one AVI file
Synchronized Playback	16-channel synchronized playback at the same time
Digital Zoom	User may zoom in/out the video display with mouse scroll wheel

PTZ Control

PTZ Management	Manages pan, tilt, zoom operation with speed control
Protocol Supported	Pelco-P, Pelco-D
Preset Position	Goto, set, clear preset positions and patrol on preset positions
Preset Position Number	32
PTZ Tour	4 kinds of patrol path can be set up, each path can be set to patrol eight setting position
PTZ Speed	Pan, Tilt, Zoom, Focus, Iris, Auto pan speed can be set from 0 to 100
Expandable PTZ Command	User-defined PTZ command to support additional PTZ protocols
Mouse PTZ	On-screen 8-direction PTZ operation with mouse operation. This can be run under full-screen mode as well

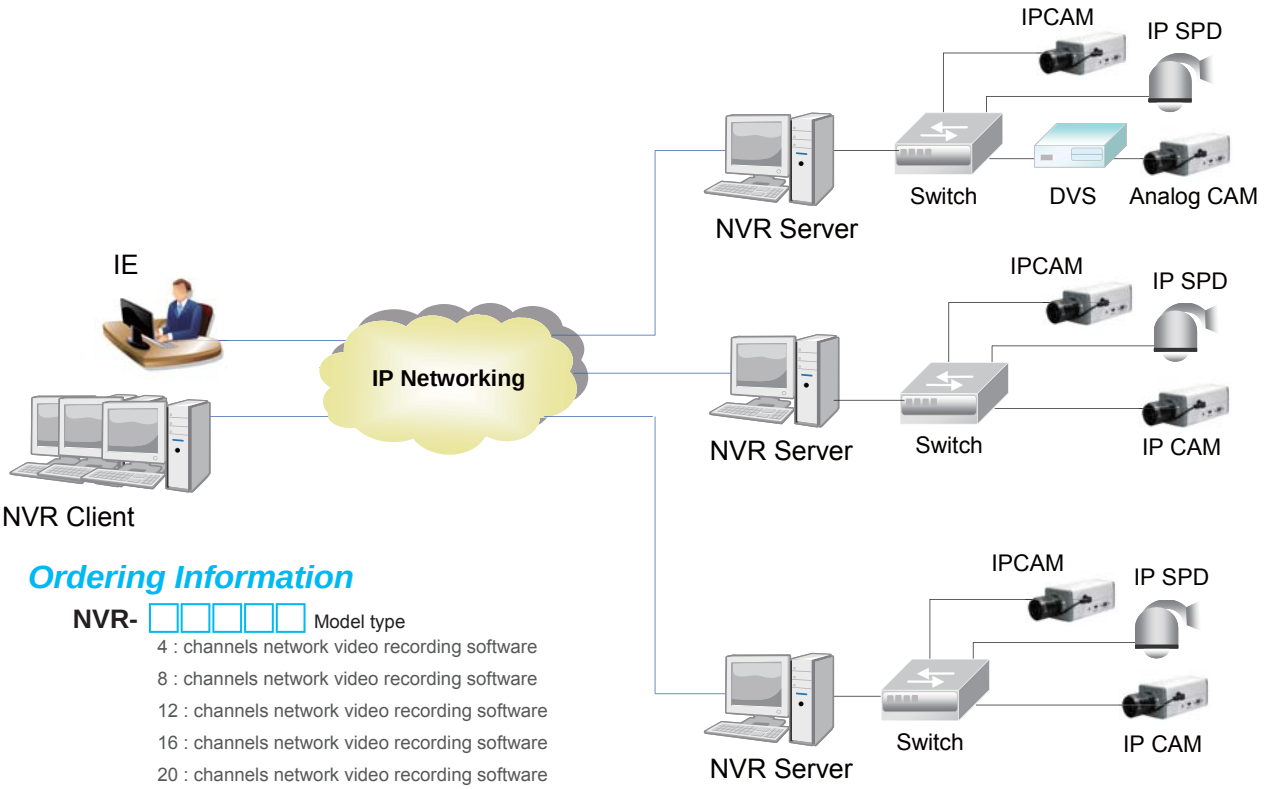

Ordering Information

NVR- □□□□□ Model type

4 : channels network video recording software
8 : channels network video recording software
12 : channels network video recording software
16 : channels network video recording software
20 : channels network video recording software
25 : channels network video recording software
28 : channels network video recording software
32 : channels network video recording software
36 : channels network video recording software
64 : channels network video recording software

Example: NVR-8

	M-JPEG	MPEG4	H.264	Audio	IR	DI/DO	PTZ
CTC Union							
IPCAM-8309F	✓	✓		✓			
IPCAM-8309FW	✓	✓		✓	✓		
IPCAM-8309D	✓	✓		✓		✓	
IPCAM-8308IR	✓	✓		✓	✓	✓	
IPCAM-8318IR	✓	✓		✓	✓	✓	
IPCAM-8318F	✓	✓		✓		✓	
IPCAM-8318P	✓	✓		✓			✓
DVS-8501E-H			✓	✓		✓	✓
DVS-8501E			✓	✓		✓	✓
DVS-8504E			✓	✓		✓	✓
Axis							
209FD	✓	✓					
214PTZ	✓	✓					✓
211M	✓	✓					
241Q	✓	✓					
Arecont Vision							
AV3130	✓						
AV5100	✓						
Bosch							
VideoJet-10	✓	✓		✓		✓	✓
Sony							
SNCRZ50N	✓	✓	✓	✓		✓	✓
SNCRZ30	✓					✓	✓
SNCP5	✓	✓		✓			✓
SNCX550	✓	✓	✓	✓		✓	✓
Vivotek							
IZ7151	✓	✓		✓		✓	
IP7251	✓	✓		✓		✓	
IP7151/7152	✓	✓		✓		✓	
IP7142	✓	✓		✓	✓	✓	
IP7138/7139	✓	✓		✓		✓	
IP7135/7137		✓		✓			
IP7133/7134	✓	✓		✓		✓	
IP7131/7132		✓				✓	
IP6117/6127	✓	✓				✓	
IP6112/6122	✓	✓				✓	
IP3112/3122		✓				✓	
IP2112/2122	✓					✓	
PZ7151/7152	✓	✓				✓	✓
PZ7131/7132	✓	✓				✓	✓
PZ7112/7122	✓	✓				✓	✓
PZ7111/PZ7121	✓	✓				✓	✓
PT7135/7137		✓					✓
PZ6114/PZ6124	✓	✓				✓	✓
PZ6112/6122	✓	✓				✓	✓
PT3117/PT3127	✓	✓				✓	✓
PT3112/3122	✓	✓				✓	✓
SD7151	✓	✓				✓	✓
SD6112V/6122V	✓	✓				✓	✓
FD7141	✓	✓		✓	✓	✓	
FD7131/7132	✓	✓		✓	✓	✓	
FD6112V/6122V	✓	✓		✓	✓	✓	
FD6111V/6121V	✓	✓		✓	✓	✓	
VS2403	✓					✓	✓
VS2101	✓					✓	✓
VS3100P		✓		✓		✓	✓
VS3102		✓		✓		✓	✓
VS7100	✓	✓		✓		✓	✓

	M-JPEG	MPEG4	H.264	Audio	IR	DI/DO	PTZ
ACTi							
ACM-1231/1232	✓	✓		✓	✓		
ACM-1511	✓	✓		✓	✓		
ACM-3401	✓	✓		✓	✓		
ACM-3411	✓	✓		✓	✓		
ACM-4200/4201	✓	✓		✓			
ACM-5601/5611	✓	✓		✓		✓	
ACM-7411	✓	✓		✓	✓	✓	✓
ACM-1011	✓	✓		✓	✓		
ACM-1311	✓	✓		✓	✓		
ACM-1431/1432	✓	✓		✓	✓		
ACM-5001	✓	✓		✓		✓	
ACM-5711	✓	✓		✓		✓	
CAM-5201/5221	✓	✓		✓		✓	
CAM-5301/5321	✓	✓		✓		✓	
ACM-3001	✓	✓		✓			
ACM-3011	✓	✓		✓	✓		
ACM-3211	✓	✓		✓	✓		
ACM-3311	✓	✓		✓	✓		
CAM-7300	✓	✓		✓	✓	✓	✓
ACM-4000/4001	✓	✓					
ACM-8201/8211	✓	✓		✓		✓	✓
ACM-8511	✓	✓		✓		✓	✓
CAM-6500/6510		✓		✓	✓	✓	✓
CAM-6600		✓		✓	✓	✓	✓
ACD-2100	✓	✓		✓			✓
ACD-2200	✓	✓		✓			✓
ACD-2300	✓	✓		✓		✓	✓
ACD-2400	✓	✓		✓		✓	✓
SED-2120		✓				✓	✓
SED-2140		✓		✓		✓	✓
SED-2320Q		✓		✓		✓	✓
SED-2610		✓		✓		✓	✓
JVC							
C30U	✓			✓		✓	✓
C625U	✓			✓		✓	✓
C655U	✓						✓
IQinVision							
IQ755	✓			✓		✓	
IQ753	✓			✓		✓	

Dual Stream Network Dome Camera

IPCAM-8309D

The IPCAM-8309D is a powerful network dome camera with VGA (640*480) resolution for professional surveillance and remote monitoring. The integrated Power over Ethernet allows power to be supplied to the camera via the network cable. Additionally, the product offer multi-level password protection and HTTPS / SSL encryption. The IPCAM-8309D also supports 3GPP mobile protocol, which enables users to monitor via 3G cell phones or any RTSP (Real Time Streaming Protocol) compatible multimedia device on the go.

Features

- 1/4" progressive scan CMOS sensor
- Simultaneous Motion JPEG & MPEG-4 streams up to 4CIF resolution
- Excellent image quality with up to 30 fps in all resolution
- PoE (Power over Ethernet) enabled device
- Supports two-way Audio
- Digital Input / Output port for external alarm & sensor
- Supports 3GPP/ISMA RTSP
- UPnP for fast and easy Installation
- Free bundled 16 channel surveillance and recording software

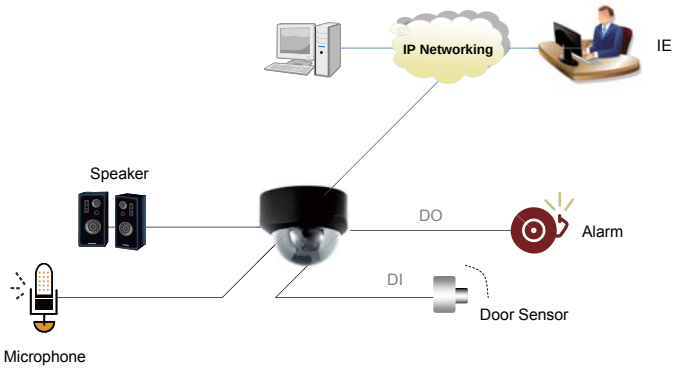

Image Sensor	1/4" Progressive VGA CMOS Effective pixels 640x480
Lens	4.0mm, F2.0
Minimum Illumination	0.5Lux
Video Compression	MPEG4, Motion JPEG
Video Adjustment	Brightness, Contrast, Hue, Saturation, Constant Bit Rate (CBR), Variable Bit Rate (VBR)
Bit Rate	64K ~2Mbps
Frame Rate	Motion JPEG: Up to 30 fps in all resolutions MPEG-4: Up to 30 fps in all resolutions
Video Stream	Simultaneous Motion JPEG and MPEG-4 Controllable frame rate and bandwidth 3GPP/ISMA RTSP compatible
Digital Zoom	10x
Operating System	Embedded Linux 2.4
Processor and Memory	ARM9 based 32-bit RISC CPU, 64MB RAM, 8MB Flash
Ethernet	RJ-45 10BaseT/100BaseTX PoE
Audio Streaming	Two-way
Audio Input	3.5 mm mic/line in
Audio Output	3.5 mm line out jack
Audio Compression	ADPCM 64Kbps
Terminal Block Connector	1 alarm input/ 1 relay output
Alarm Trigger	External input, Motion detection
Alarm Events	Pre and post alarm buffer File upload via FTP Notification via email External output activation
Network Protocols	TCP/IP, DHCP, PPPoE, ARP, ICMP, FTP, SMTP, DNS, NTP, IGMP, UPnP, RTSP, RTP, HTTP, TCP, UDP, 3GPP/ISMA RTSP
Application Program	CTCU IP installer (Win32 Application) 16 channel recording software (SVP-Express)
Security	Password protection, HTTPS encryption, user access log
Operating Condition	0~50°C
Operating Humidity	20~80% RH (non-condensing)
Power	DC 5V, 1A
Dimensions	110 x 130 mm (W x H)
Approvals	CE, FCC, RoHS
Included Accessories	CD with installation and management software, Power supply

Ordering Information

IPCAM-8309D Dual Stream Network Dome Camera

Dual Stream Day&Night Network Camera

IPCAM-8318F

The IPCAM-8318F Day and Night network camera is a high performance CCD camera for professional surveillance and remote monitoring. IPCAM-8318F also receives IR light when in low light and reverts to black&white video. With integrated Power over Ethernet, power can be supplied to the camera via the network cable. Additionally, the product offer multi-level password protection and HTTPS encryption.

Features

- 1/3" Sony Super HAD CCD (420TVL)
- Simultaneous Motion JPEG & MPEG-4 streams up to 4CIF resolution
- Excellent image quality with up to 30 fps in all resolution
- Supports two-way audio
- Digital I/O for external alarm or sensor
- Supports 3GPP/ISMA RTSP
- PoE (Power over Ethernet) enabled the device
- UPnP for fast and easy installation
- Free bundled 16 channel surveillance and recording software

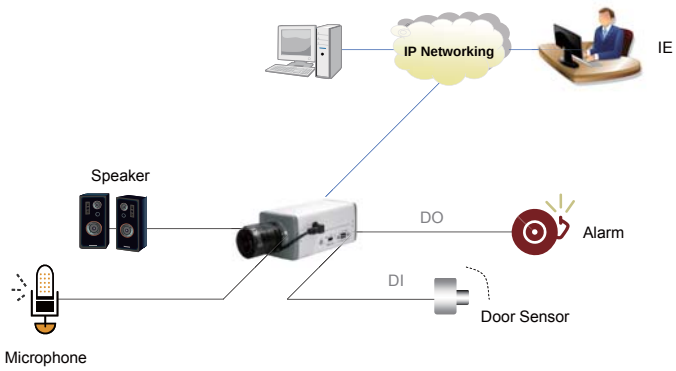

Image Sensor	1/3" Sony SuperHAD CCD Effective pixels 640x480
Minimum Illumination	0.3 Lux, F2.0
Horizontal Resolution	420TVL
S/N Ratio	> 48dB
Video Output	1, BNC, 75ohm, 1.0 Vp-p
Lens Type	CS-mount
Back Light Control	Auto
Gain Control	Auto
White Balance	Auto
Day/Night Mode	Color, Black/White
Electronic Shutter	1/50 (60) ~1/100,000 sec
Video Compression	MPEG4, Motion JPEG
Video Adjustment	Brightness, Contrast, Hue, Saturation, Constant Bit Rate (CBR), Variable Bit Rate (VBR)
Bit Rate	64K ~2Mbps
Frame Rate	Motion JPEG: Up to 30 fps in all resolutions MPEG-4: Up to 30 fps in all resolutions
Video Stream	Simultaneous Motion JPEG and MPEG-4 Controllable frame rate and bandwidth 3GPP/ISMA RTSP compatible
Digital Zoom	10x
Operating System	Embedded Linux 2.4
Processor and Memory	ARM9 based 32-bit RISC CPU, 64MB RAM, 8MB Flash
Ethernet	RJ-45 10BaseT/100BaseTX PoE
Audio Streaming	Two-way
Audio Input	3.5 mm mic/line in
Audio Output	3.5 mm line out jack
Audio Compression	ADPCM 64Kbps
Alarm Trigger	External input, Motion detection
Alarm Events	Pre and post alarm buffer File upload via FTP Notification via email External output activation
Network Protocols	TCP/IP, DHCP, PPPoE, ARP, ICMP, FTP, SMTP, DNS, NTP, IGMP, UPnP, RTSP, RTP, HTTP, TCP, UDP, 3GPP/ISMA RTSP
Application Program	CTCU IP installer (Win32 Application) 16 channel recording software (SVP-Express)
Security	Password protection, HTTPS encryption, user access log
Operating Condition	0~50°C
Operating Humidity	20~80% RH (non-condensing)
Casing	Weatherproof casing with IP66
Power	DC 12V, 1A
Dimensions	265 x 85 mm (W x H)
Approvals	CE, FCC, RoHS
Included Accessories	CD with installation and management software, Power supply, Wall-mount bracket

Ordering Information

IPCAM-8318F Dual Stream Day&Night Network Camera

Dual Stream Network High-speed Dome Camera

IPCAM-8318P

The IPCAM-8318P High-speed Night network dome is a high performance CCD camera for professional surveillance and remote monitoring.The IPCAM-8318P IP speed dome utilizes a 1/4" Sony Super HAD CCD and gives 480TVL high video quality, with 26x optical zooming and optimized distant target focusing. The IPCAM-8318P is enclosed in IP66 waterproof housing. Additionally, the product offers multi-level password protection and HTTPS encryption.

Features

- 1/4" Sony Super HAD CCD (480TVL)
- Simultaneous Motion JPEG & MPEG-4 streams up to 4CIF resolution
- Excellent image quality with up to 30 fps in all resolutions
- 26x optical and 10x digital zoom
- IP66 waterproof, designed for outdoor or indoor applications
- Pendant and wall-mount installations for various environments
- Supports 3GPP/ISMA RTSP
- UPnP for fast and easy installation
- Free bundled 16 channel surveillance and recording software

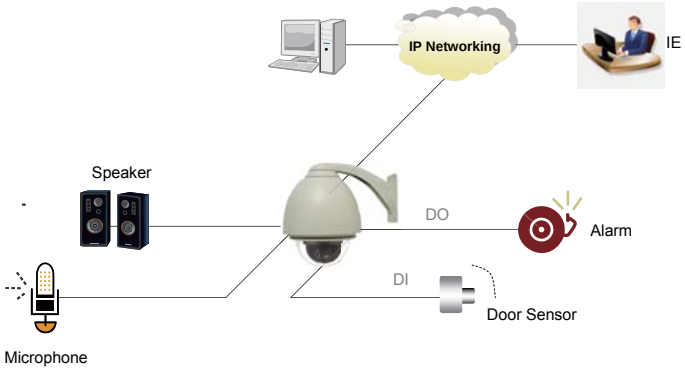

Image Sensor	1/4" Sony Super HAD CCD (480TVL)
Electronic Shutter	1/60 (50) ~1/100,000
S/N Ratio	> 48dB
Zoom	26x optical and 10x digitial, total 260x
Lens	F1.6~3.8 f=3.5~91mm
Minimum Illumination	2.5 Lux at F1.6, 0.07 Lux at F1.6 (Slow shutter)
Pan Range	360 degrees endless
Tilt Range	0~180 degrees
Video Output	1, BNC, 75ohm, 1.0Vp-p
Video Compression	MPEG4 Simple Profile, Motion JPEG
Video Resolutions	4CIF NTSC=704 x 480, PAL=704 x 576 CIF NTSC=352 x 240, PAL=352 x 288 QCIF NTSC=176 x 120, PAL=176 x 144
Bit Rate	64K ~2M bits/sec
Video Adjustment	Brightness, Contrast, Hue, Saturation, Constant Bit Rate (CBR), Variable Bit Rate (VBR)
Camera Control	Support 32 preset position
Waterproof	IP66
Operating System	Embedded Linux 2.4
Processor and Memory	ARM9 based 32-bit RISC CPU, 64MB RAM, 8MB Flash
Ethernet	RJ-45 10BaseT/100BaseTX
Alarm Trigger	External input, Motion detection
Alarm Events	Pre and post alarm buffer File upload via FTP Notification via email External output activation
Network Protocols	TCP/IP, DHCP, PPPoE, ARP, ICMP, FTP, SMTP, DNS, HTTP, NTP, IGMP, UPnP, RTSP, RTP, TCP, UDP, 3GPP/ISMA RTSP
Application Program	CTCU IP installer (Win32 Application) 16 channel recording software (SVP-Express)
Security	Password protection, HTTPS encryption, user access log
Dimensions	150 x 262mm (D x H)
Operating Condition	-10~50°C
Storage Condition	0~70°C
Operating Humidity	20~80% RH (non-condensing)
Power	AC 24V
Power Consumption	Max: 13W
Included Accessories	CD with installation and management software, Power supply

Ordering Information

IPCAM-8318P Dual Stream Network High-speed Dome Camera

Ethernet over Coax

EOC-10

The EOC-10 is point-to-point and point-to-multipoint EoCNA (Ethernet over Coax Network Alliance) solution that efficiently extends 10/100 Ethernet circuits up to 900 meters (2,952feet) at full Fast Ethernet speed using existing coaxial cable. The EOC-10 will allow Ethernet connectivity in existing facilities or homes without pulling extra cable. This is perfect solution for Ethernet on the factory floor where systems have been upgraded from slower serial communication to Ethernet networking. Installation is easy with absolutely no settings required. The EOC-10 is used in Coaxial cable systems to extend Ethernet connectivity over existing CCD/CATV grade Coaxial cable. The EOC-10 works by sharing the same cable with CATV signals, without interference to the existing CATV signals.

Features

- Extends LAN connectivity using existing coaxial cable
- Transmits CATV and Ethernet over the same coaxial cable
- 112Mbps (PHY speed) @ 900 meters (2,952feet)
- 32Mbps (PHY speed) @ 1.2Km (4,000feet)
- Supports point to point and point to multi-point up to 32 nodes over tap/splitter
- Asymmetrical using EoCNA standard
- Operates transparently to high layer protocols such as TCP/IP
- Auto MDI / MDIX
- Auto negotiation
- Plug and Play, no configuration required
- Status LEDs for simple monitoring

Ports	Fast Ethernet Interface 10/100 Mbps, RJ45 Coax Interface Two F-Type Female Coax Connectors, One for EoCNA, the other for TV Protocol Transparent to higher layer protocol Transmission Power and Spectrum 8 ±1 dBm, 12~28 MHz Physical layer transmission speed and distance Up to 112Mbps@900 meters Up to 32Mbps @ 1.2Km (-176dBm/Hz Noise Floor)
Indications	LEDs (PWR, LAN Link/Act, Coax Link/Act, Coax Sync)
Standard	ITU G.9954, IEEE802.3, IEEE802.3u, IEEE802.3x
Power Input	DC 5V (via AC switching adapter)
Power Consumption	6W
Dimensions	83 x 138 x28mm (D x W x H)
Weight	330g
Temperature	0°C ~ 50°C (Operating), -10°C ~ 70°C (Storage)
Humidity	10 ~ 90% non-condensing
Certification	CE, FCC, RoHS
MTBF	57,000 hours

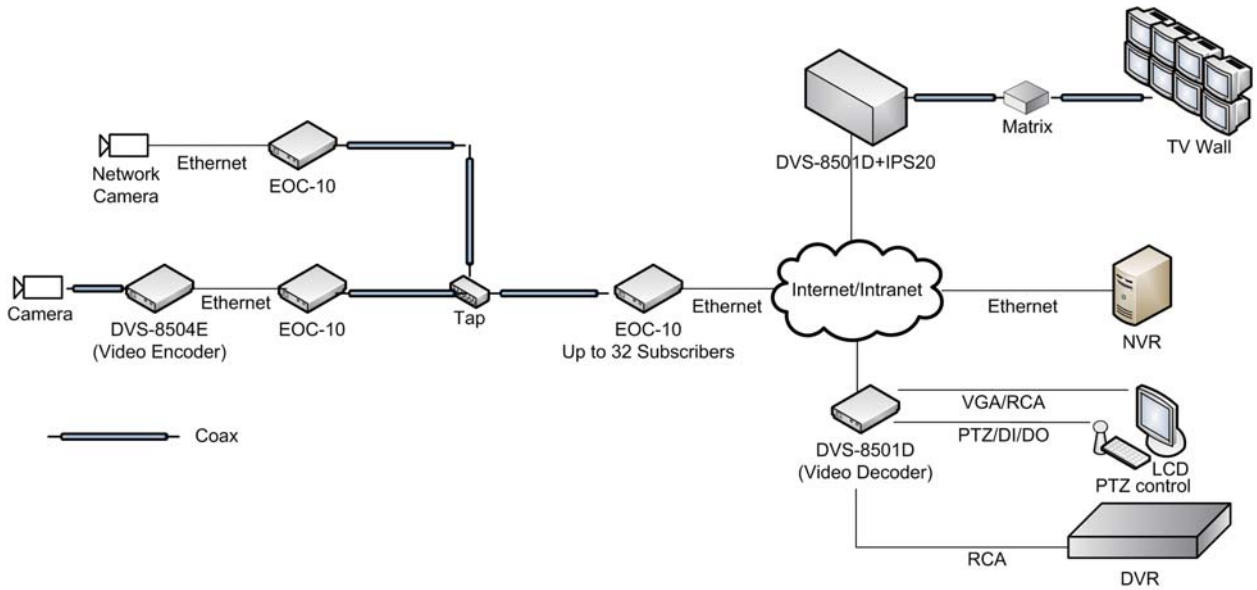

Ordering Information

EOC-10 10/100Base-TX Ethernet over coax, AC adapter required

Chapter.1 Fiber

FRM220

FRM220A

FRM220 OFC

FRM301

Chapter.2 xDSL

Chapter.3 PDH

Chapter.4 IP Networking

Chapter.5 Testers

Chapter.6 Interface Converter

Chapter.7 Management

Chapter.8 IP Surveillance

Security IP Surveillance

You are our most valuable asset

2010

NVR

H.264/MPEG4

Encoder/Decoder

CTC Union Technologies Co., Ltd. **2010 Copyright ©**
Taipei Neihu Technology Park
Far Eastern Vienna Technology Center, No.60, Zhouzi St. Neihu, Taipei 114, Taiwan
T +886 2 2659-1021 **F** +886 2 2659-0237 **E** info@ctcu.com

www.ctcu.com